June 26, 1923.

1,460,287

F. E. STEVENSON

TILE PRESS

Filed March 10, 1922

9 Sheets-Sheet 1

Fig. 1.

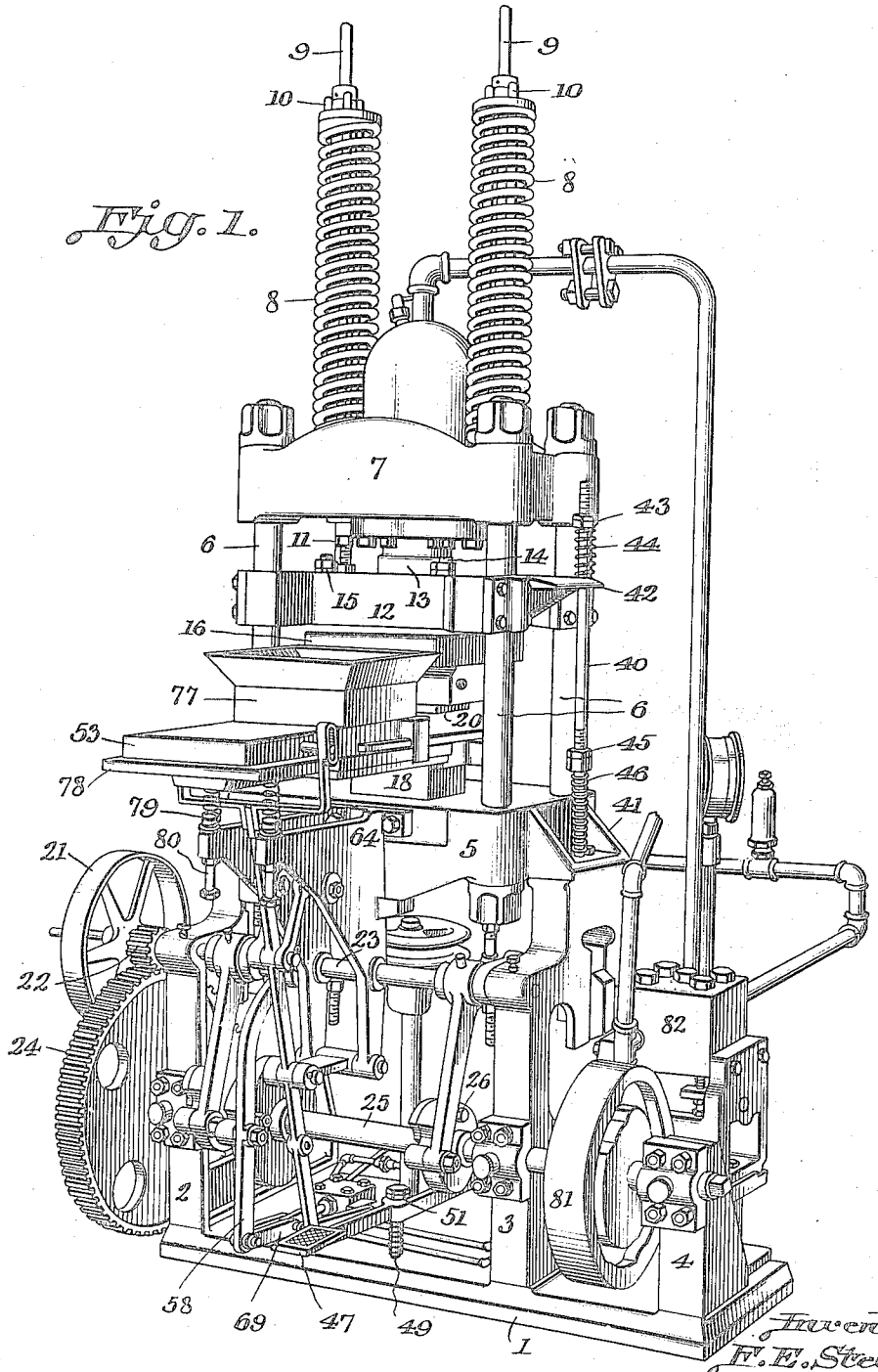

Inventor
F. E. Stevenson
by his Attorneys
Baldwin Wight

June 26, 1923. 1,460,287

F. E. STEVENSON

TILE PRESS

Filed March 10, 1922 9 Sheets-Sheet 2

Fig. 2.

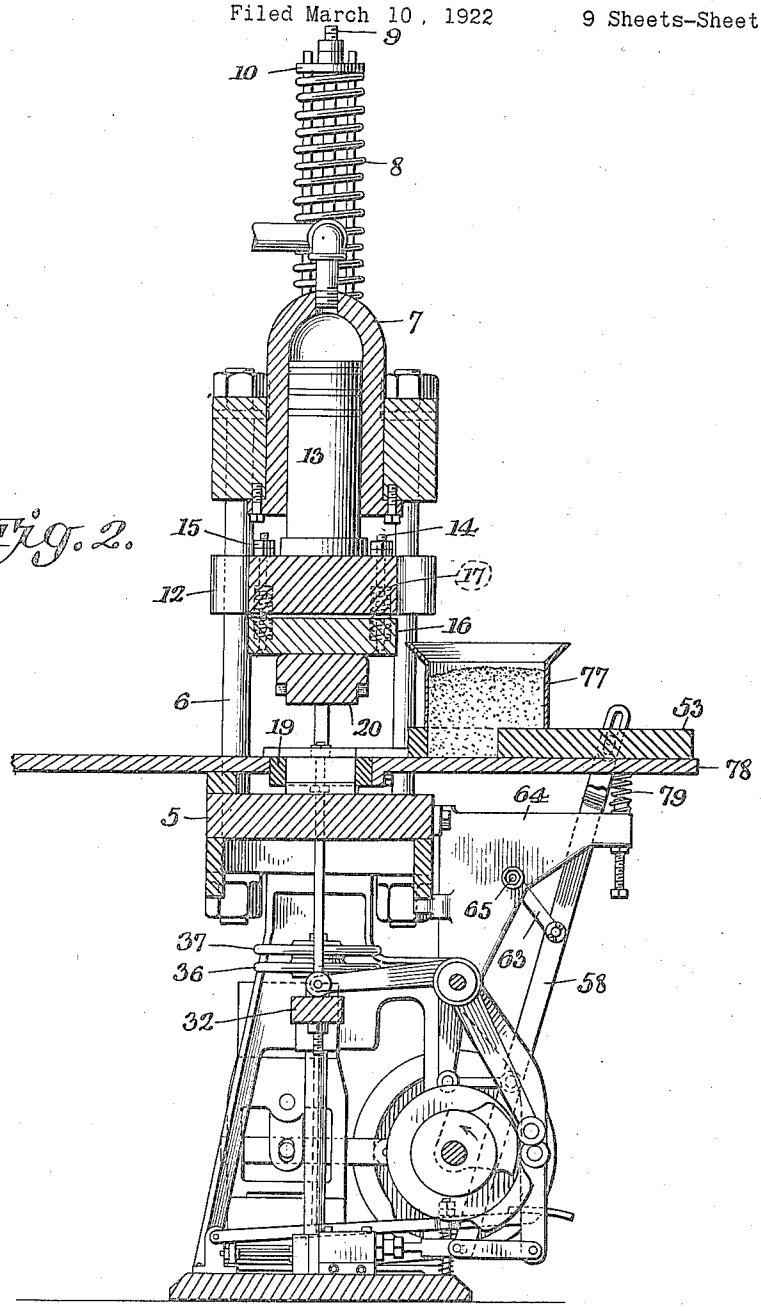

Inventor
F. E. Stevenson
by his Attorneys
Baldwin Wight

June 26, 1923.

1,460,287

F. E. STEVENSON

TILE PRESS

Filed March 10, 1922

9 Sheets-Sheet 3

Fig. 3.

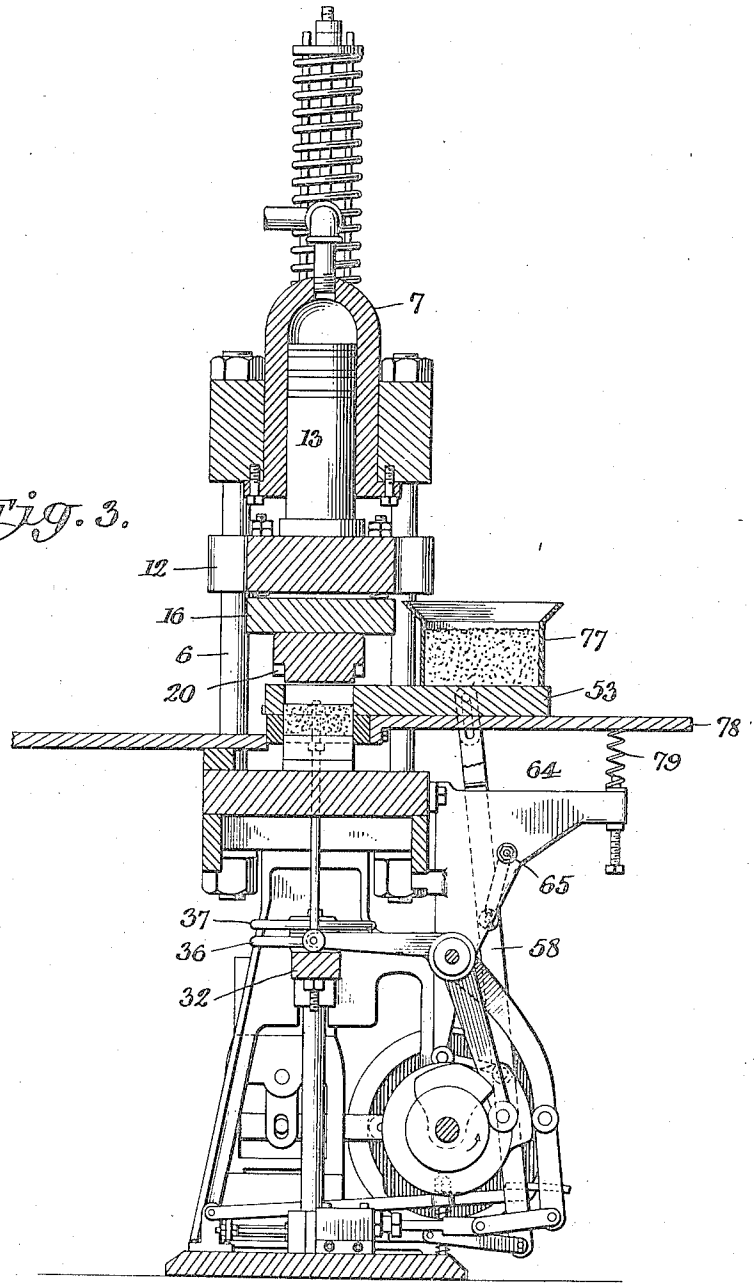

Inventor
F. E. Stevenson
by his Attorneys
Baldwin Wight

June 26, 1923. 1,460,287

F. E. STEVENSON

TILE PRESS

Filed March 10, 1922 9 Sheets-Sheet 4

Fig. 4.

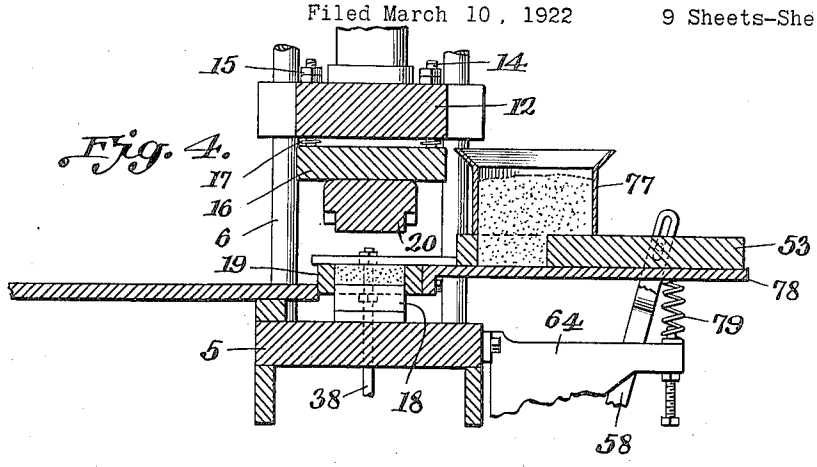

Fig. 5.

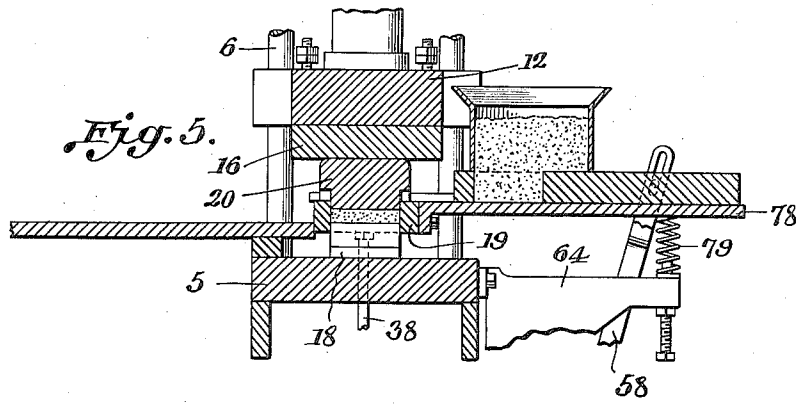

Fig. 6.

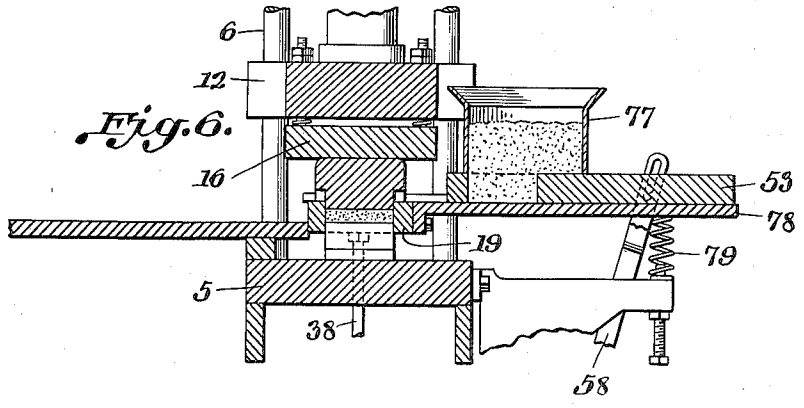

Inventor
F. E. Stevenson
by his Attorneys
Baldwin Wight

June 26, 1923. 1,460,287

F. E. STEVENSON

TILE PRESS

Filed March 10, 1922 9 Sheets-Sheet 5

Fig. 7.

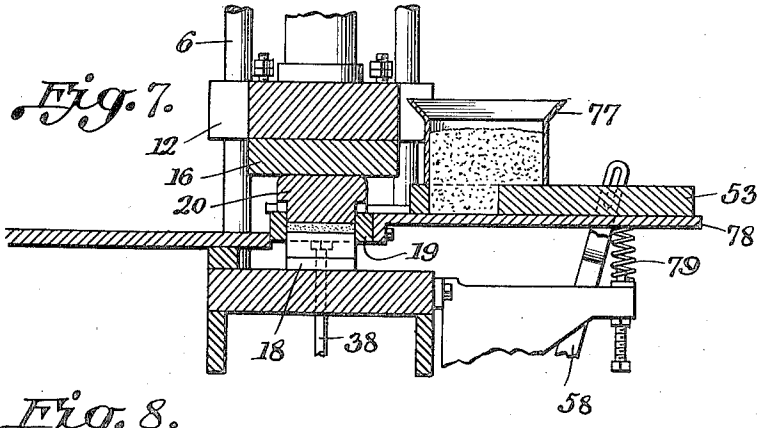

Fig. 8.

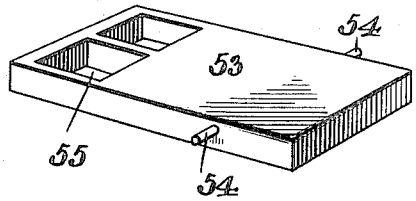

Fig. 9.

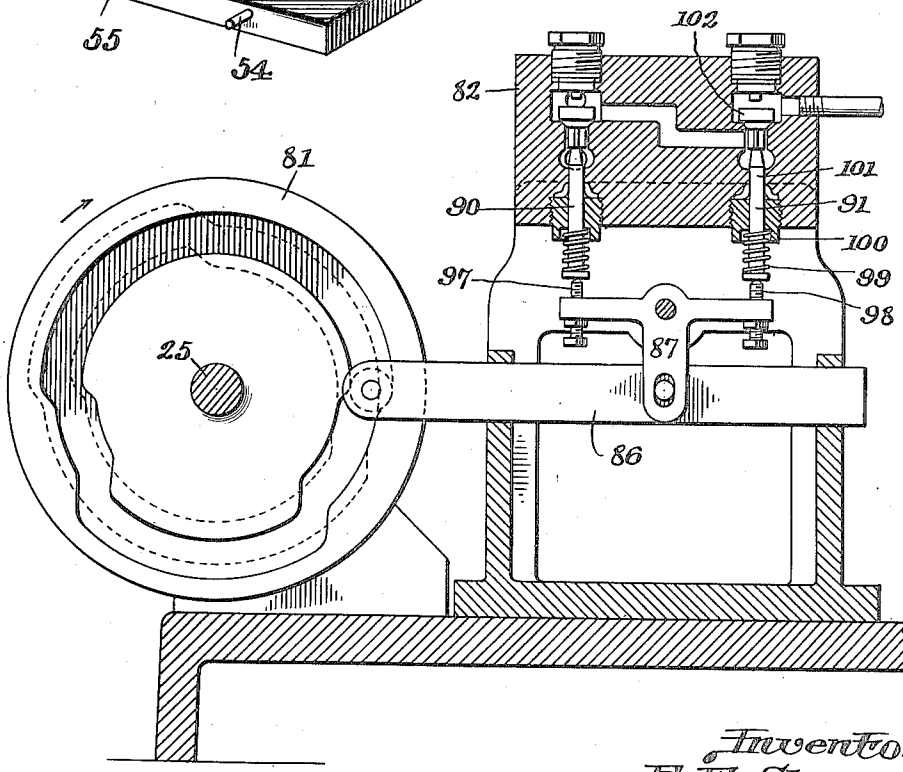

Inventor.
F. E. Stevenson
by his Attorneys.
Baldwin & Wight

June 26, 1923. 1,460,287

F. E. STEVENSON

TILE PRESS

Filed March 10, 1922 9 Sheets-Sheet 6

Fig. 10.

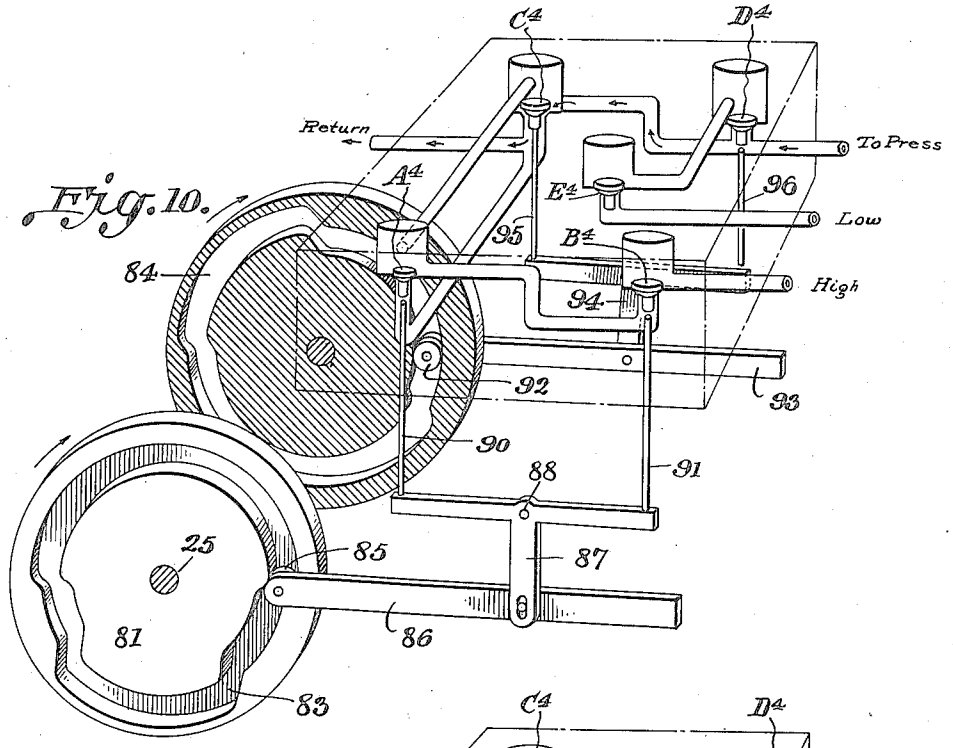

Fig. 11.

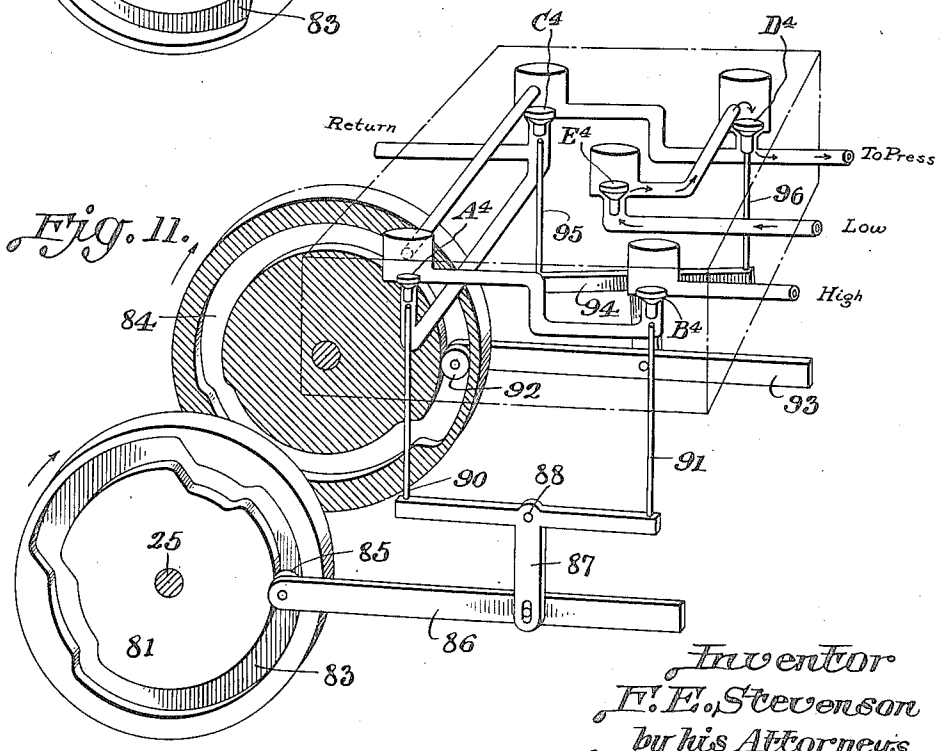

Inventor
F. E. Stevenson
by his Attorneys
Baldwin & Wright

June 26, 1923. 1,460,287

F. E. STEVENSON

TILE PRESS

Filed March 10, 1922 9 Sheets-Sheet 7

Fig. 12.

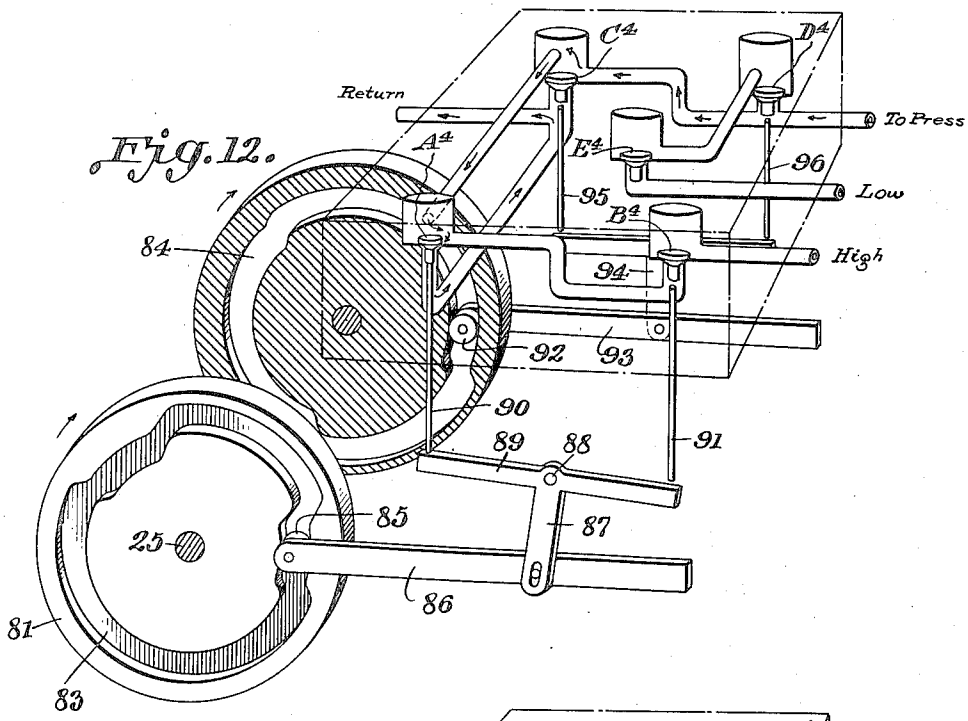

Fig. 13.

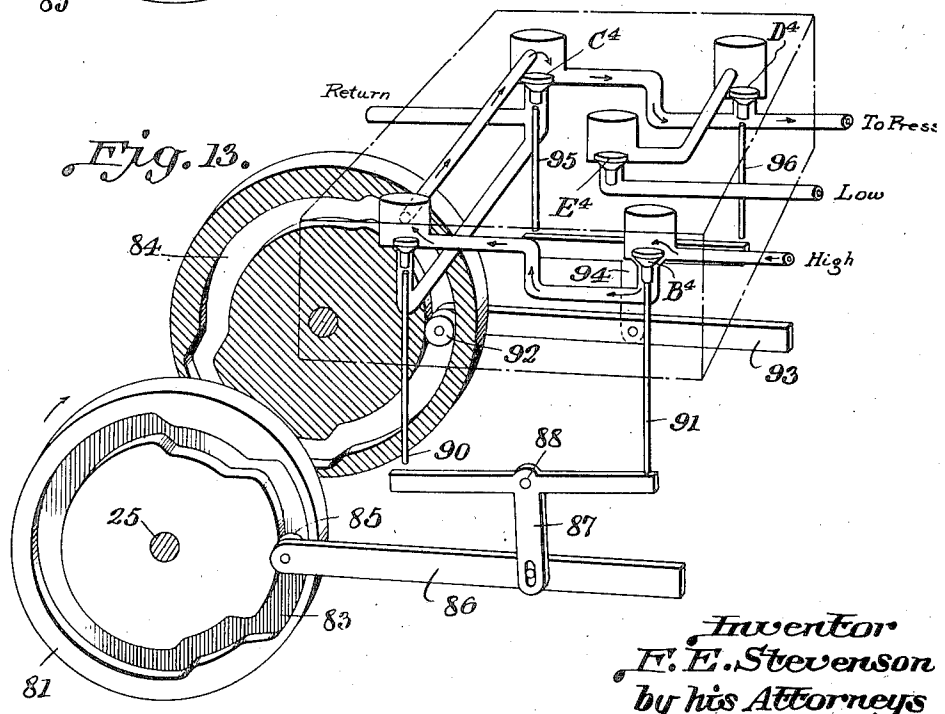

Inventor
F. E. Stevenson
by his Attorneys
Baldwin & Wright

June 26, 1923. 1,460,287

F. E. STEVENSON

TILE PRESS

Filed March 10, 1922 9 Sheets-Sheet 8

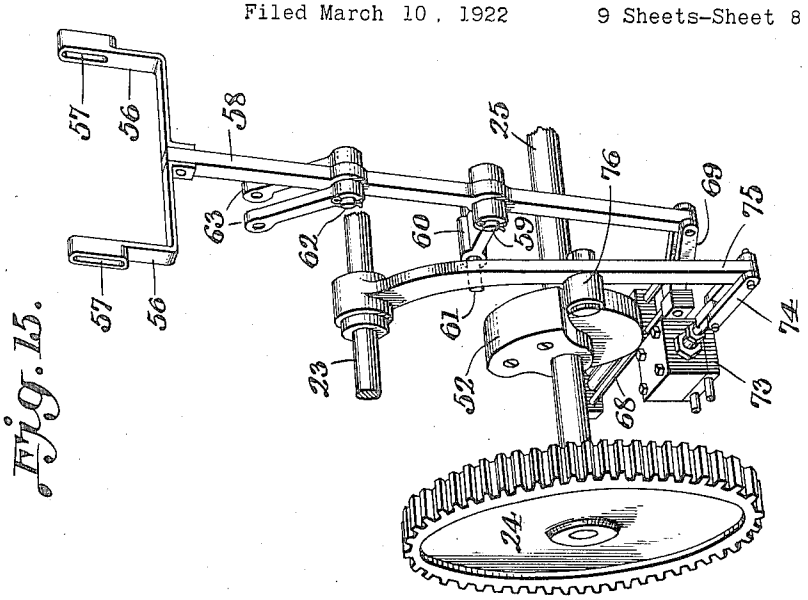

Fig. 15.

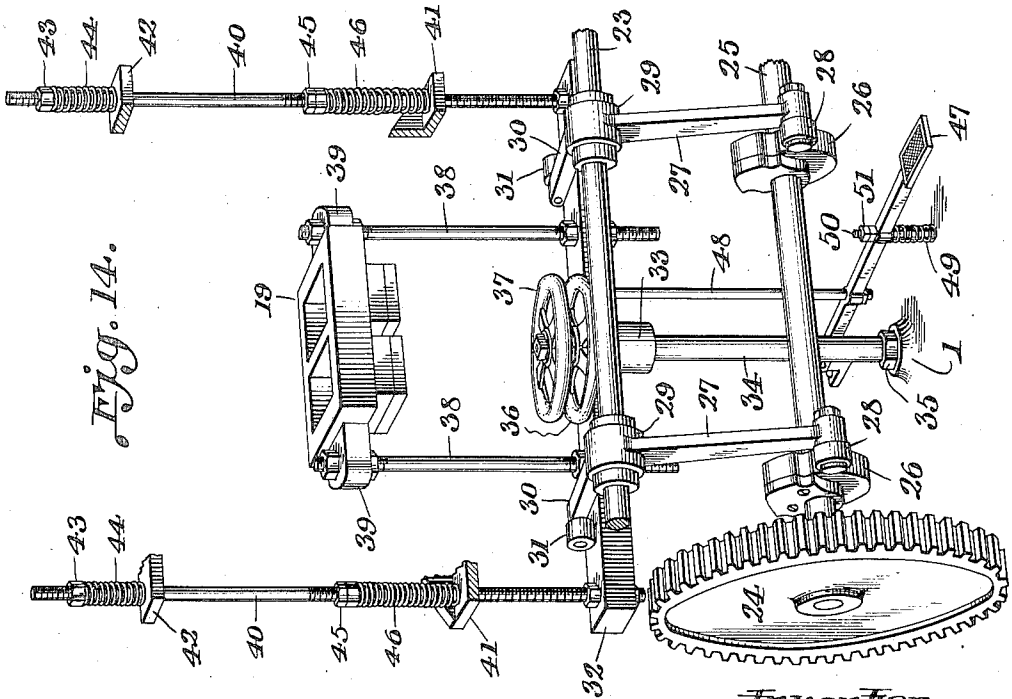

Fig. 14.

Inventor
F. E. Stevenson
by his Attorneys
Baldwin Wright

June 26, 1923. 1,460,287

F. E. STEVENSON

TILE PRESS

Filed March 10, 1922 9 Sheets-Sheet 9

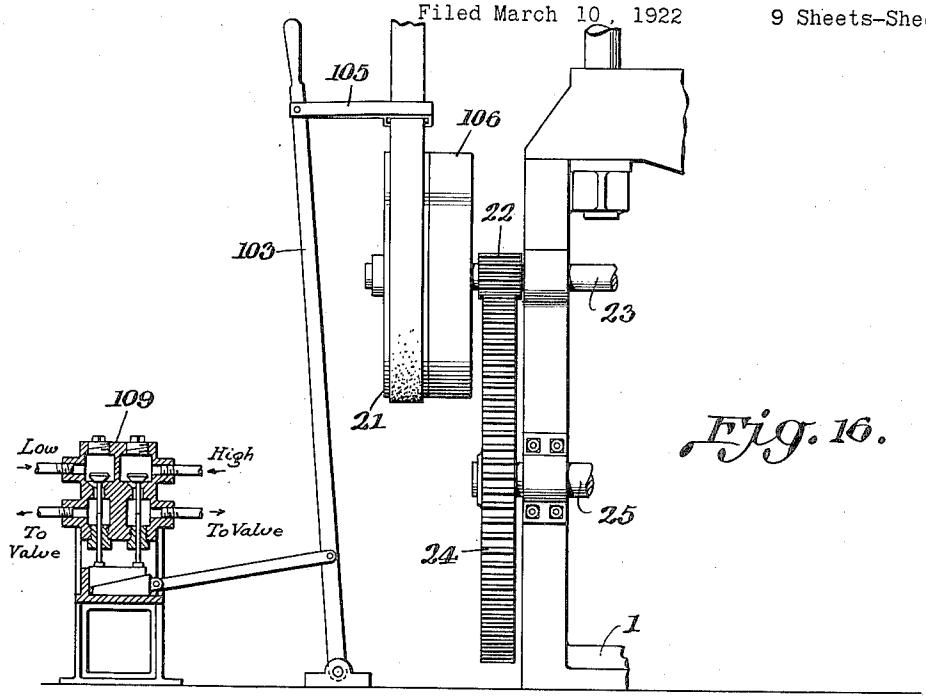

Fig. 16.

Fig. 17.

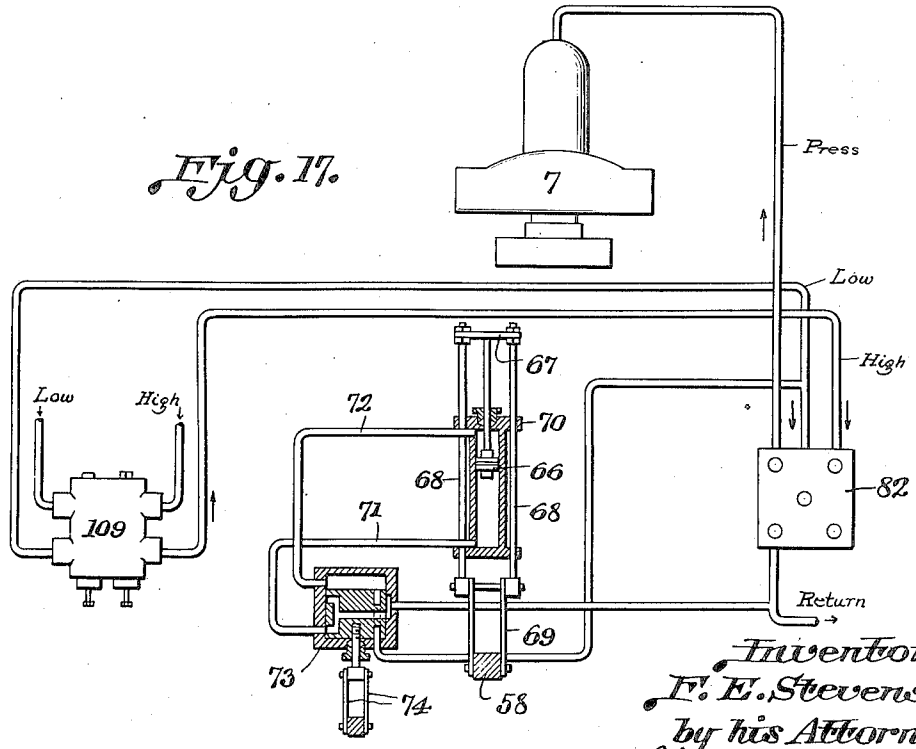

Inventor
F. E. Stevenson
by his Attorneys
Baldwin & Wright

Patented June 26, 1923. 1,460,287

UNITED STATES PATENT OFFICE.

FRANCIS E. STEVENSON, OF MOUNT GILEAD, OHIO, ASSIGNOR TO THE HYDRAULIC PRESS MANUFACTURING COMPANY, OF MOUNT GILEAD, OHIO.

TILE PRESS.

Application filed March 10, 1922. Serial No. 542,623.

To all whom it may concern:

Be it known that I, FRANCIS E. STEVENSON, a citizen of the United States, and a resident of Mount Gilead, in the county of Morrow and State of Ohio, have invented certain new and useful Improvements in Tile Presses, of which the following is a full, clear, and exact description.

An object of my invention is the provision of a tile press of the hydraulic type that will enable the production of a uniform product and one in which there is small loss of the tiles.

Another object is to provide an improved mechanism for operating the charging device.

Another object is to provide a new mechanism for balancing the mold with springs.

Another object is the provision of means for releasing the initial pressure momentarily to permit the air to escape easily while holding one set of mold lifting springs out of action.

Another object is the provision of a valve operating mechanism particularly adapted for use in this type of machine.

Other objects will be apparent from the following detailed description and the appended claims.

In the drawings:

Figure 1 is a perspective view of the press.

Figure 2 is a vertical section showing the feed box out and no pressure applied.

Figure 3 is a similar section showing the feed box moved in to delivery position with no pressure applied.

Figure 4 is a detail section showing the feed box out having deposited the charge, with the valve position illustrated in Figure 10.

Figure 5 is a similar view showing press die applying low pressure with the valve position of Figure 11.

Figure 6 is a similar view showing press die slightly raised to permit release of air with the valve position of Figure 12.

Figure 7 is a similar view showing high pressure applied with the valve position of Figure 13.

Figure 8 is a detail view of the feed box, detached.

Figure 9 is a section showing the general type of valve mechanism and the manner in which the valves are cam operated.

Figures 10, 11, 12 and 13 are views showing diagrammatically the successive positions of the valves during the press operation.

Figure 14 is an elevation showing the mechanism for balancing and operating the mold.

Figure 15 is an elevation showing the mechanism for operating the feed box.

Figure 16 is an elevation, partly in section, showing means for operating valves when machine is disconnected from the power mechanism so that the press may be stopped instantly at any point in its stroke.

Figure 17 is a diagram of the pipe connections and certain valve mechanism.

As shown the press is mounted on a base 1 from which rise standards 2, 3 and 4. Standards 2 and 3 support the base 5 of the press proper which is connected by strain rods 6 to the cylinder 7. Springs 8 surround rods 9 and bear against nuts 10 on said rods and at their other ends against lugs on the cylinder. The rods have other nuts 11 adjustably screwed on their lower ends. These nuts may limit the upper position of the platen 12 which is rigidly connected to the press ram 13 by its socket being fitted to the ram. The platen 12 is provided with four holes through which pass bolts or studs 14 each of which is provided with two lock nuts 15 at its upper end. These bolts 14 are rigid with a sub-platen 16 and around them in small recesses are placed springs 17 under compression which always tend to keep the sub-platen 16 as far from the platen 12 as the nuts 15 will permit, for a purpose hereinafter described. The lower dies 18 are rigidly connected to the base 5, and the mold plate 19 is fitted carefully over the lower dies. The upper dies 20 are rigidly carried by the sub-platen.

Power is transmitted to the press through a pulley 21 which is keyed to a pinion 22, both the pulley and pinion turning freely on the shaft 23 which only serves as a stationary bearing for these and other elements. The pinion 22 meshes with a gear 24 which is keyed to the shaft 25 to drive the same. Shaft 25 carries a pair of identical

cams 26. (See Figure 14). Bell crank levers 27 have at their lower ends rollers 28 to engage the cams 26. These levers have hubs 29 mounted on the shaft 23 and also horizontal arms 30 provided with rollers 31. A yoke member 32 has a central hub 33 which slides over a stationary shaft 34 which is screwed into the base 1 and held in position by a lock nut 35. At its upper end the shaft 34 is threaded and two hand wheels 36 and 37 are screwed thereon, the adjustment of which determines the extent of upward movement of the yoke 32. The rollers 31 bear on the yoke 32 to move it downward when the former are operated. Upwardly extending rods 38 are rigidly attached to the yoke 32 near their lower ends and at their upper ends to ears 39 of the mold plate 19. In each case the method of attachment is that illustrated in Figure 14, where the rods are shown as being threaded, passed through the yoke 32 and mold plate 19, and held by nuts on each side.

In a similar manner lifting rods 40 are attached to the outer ends of the yoke 32 and pass through projections or lugs 41 of the base 5 and through lugs 42 of the platen 12. At their upper ends these rods are provided with nuts 43 and springs 44 encircle the rods between the nuts 43 and the lugs 42. Intermediate their ends the rods are also provided with threaded nuts 45 and springs 46 encircle the rods between the nuts 45 and the lugs 41. The springs 46 are given initial tension sufficient to just balance the weight of the yoke 32, rods 38, mold plate 19 and rods 40, which are all intimately connected. If it is desired to pull the mold plate 19 down when the machine is not running, for purpose of oiling or cleaning, this may be done by means of a foot pedal 47 pivoted at its rear and connected to the yoke 32 by a rod 48 passing through the pedal 47. A spring 49 surrounds a rod 50 fastened to the base 1, and nuts 51 engage the rod above the pedal 47. The engagement of the rod 48 with the pedal 47 is in a clearance opening sufficient to permit the movement of the yoke in the ordinary operation of the machine without effecting the pedal. The nuts 51 limit the upward movement of the pedal under the influence of the spring 49.

The shaft 25 is also provided with a cam 52 that is employed to control the movement of the charging box 53. This box, as shown in Figure 8, has pins 54 at its sides and one or more openings 55 to receive the charge. The pins 54 are received in elongated slots 57 in arms 54 carried by a lever 58. This lever is a floating lever, having no fixed fulcrum. It is connected by a pin 59 to a link 60 having a pin 61 as pivot. Another pin 62 passes through the lever 58 and links 63 which are pivoted by separate pins 65 to brackets 64 carried by the base 5. The purpose of this structure is to give a straight line movement to the upper end of arms 56 as they move to charge the material into the press or withdraw the charging plate therefrom.

The lever 58 is given its movement by a hydraulic piston 66 which carries a yoke 67 and rods 68 that are connected by links 69 to the lower end of the lever 58. These rods work in guides 70 on the casing of the piston 66. The piston is controlled by pressure applied and released alternately through connections 71 and 72. This reversal is accomplished by a pilot slide valve 73 which may be made of the poppet type or may be any other desired four-way valve. It is operated by means of links 74 connected to a lever 75 fulcrumed at its upper end on the shaft 23 and carrying a roller 76 adapted to engage the cam 52 through a spring or the unbalanced force of the stem of valve 73.

The hopper 77 is rigidly connected to a table 78 which in turn is rigidly connected to the mold box 19. The table 78 may be counterbalanced by springs 79 adjustable through members 80.

Fastened to the shaft 25 is a wheel 81 having a cam groove in each face, or two cam wheels might be provided each having one cam groove. In Figures 10 to 12 inclusive, the wheel is shown as divided into two parts for the sake of clearness. In one face is a cam groove 83 and in the other a cam groove 84. In the groove 84 engages a roller 85 on the end of a sliding arm 86 to which is fastened by a pin and slot connection a T-shaped member 87 pivoted at 88. One arm 89 underlies a stem 90 and the other arm underlies a stem 91, these stems being adapted to raise certain valves when operated as afterwards described. In the cam groove 84 operates a similar roller 92 at the end of an arm 93 which through identical connections 94 controls stems 95 and 96.

The valves and operating means are all of the same general type, and are shown in more detail in Figure 9. The arms of the T-shaped member 87 are provided with adjustable screws 97 and 98 for adjusting the normal positions of the stems 90 and 91. Each stem has a spring 99 surrounding the same between its head and the valve gland 100 and a flange packing 101 of any usual or desired type may be employed. The check valve 102 is of a well-known type. It is to be understood that the showing of Figures 10 to 13 inclusive is diagrammatic and no effort has been made to show the detailed structure in these figures.

The valves are contained in a casing 82 adjacent the cam wheel 81, and the necessary pipe connections lead therefrom as indicated. Starting with the parts in the position shown in Figure 10, the valve C^4 is the only one open and the pressure is relieved from the

press ram passing from the press through valve C^4 to return pipe as shown by the arrows in this figure. At this time the parts of the press mechanism are in the position shown in Figure 4, the feed box having deposited its charge and been withdrawn.

The next step is shown in Figure 11, where the valve D^4 has been opened and the pressure passes from the low pressure source through valves E^4 and D^4 to the press. Back pressure will then close valve C^4. The press has now moved to the Figure 5 position in which the ram has moved downward and low pressure is applied to the material in the mold.

In the next movement, as shown in Figure 12, the valve A^4 is raised, and the pressure is momentarily relieved, the fluid passing from press under valve D^4, over valve C^4, down through valve A^4, and back to return as shown by the dotted lines in this figure. This momentary relief is shown in Figure 6 where there is a slight separation between the platen 12 and the sub-platen 16.

Next, as shown in Figure 13, the valve B^4 is opened and the high pressure passes through valve B^4 over valves A^4 and C^4 and under valve D^4 to the press, moving the parts to the position shown in Figure 7 where high pressure is applied to the material.

After this, the parts are returned to the Figure 10 position, and the cycle of operations is resumed.

The movements of the mold and automatic charging devices are controlled by the cams 26 and 52 and may best be followed by a consideration of Figures 2, 3, 14 and 15. In Figure 2 the parts are in normal position, the feed box 53 is withdrawn, there is no pressure, and the mold plate 19 has been lowered until the top face thereof is flush with the lower dies 18 and the table 78. The charging box 53 then slides into the press and the mold 19 rises with the charging box 53, the hopper 77 and the table 78. At this time the pins 54 in the slots 57 rise upwardly therein. The parts then occupy the position shown in Figure 3. Thereafter the charging box is withdrawn and the parts are in the position shown in Figure 4. At this point the cycle of operations controlled by the valves in the box 82 begins and are carried out as described above. As soon as the final stage is reached, the mold 19 is moved downward and the charging operation is repeated.

It may be advisable to provide means whereby the machine may be stopped at any time no matter what the stroke position may be. As an example of such means, there is shown in Figure 16 a lever 103, hinged at a fixed point 104 and connected by a link 105 to the belt that normally runs on the pulley 21. Movement of the lever, which is the usual belt shifter will throw the belt upon an idle pulley 106 and stop the application of power to the machine. Connected to the lever 103 is a link 107 attached to a wedge 108 underlying supporting means for stems that hold open valves in a casing 109. These valves are normally open and lie in the trains of communications from the sources of high and low pressure respectively to the valve box 82. When the wedge 108 is drawn out, the valves close and pressure is shut off from the press, stopping the movement of the press ram.

Instead of a belt shifter a clutch may be substituted, and equivalent operating means for the valves may be used instead of the wedge.

The thickness of the briquettes may be regulated by controlling the amount of material charged into the mold 19. This is done by raising or lowering the pair of handwheels 36 and 37. Since these wheels control the upper limit of the yoke 32, they also control the upper limit of mold plate 19 and therefore the depth of the opening when the mold plate is moved up.

The proper balancing of the mold is obtained by an adjustment of the nuts 45, and the adjustment for keeping the mold top flush with the lower dies 18 when in the lower position is made by the nuts on the rods 38.

The check E^4 is used to prevent the high pressure accumulator fluid from flowing back on to the low pressure line if any of the other checks should leak.

It is understood that the succeeding movements of the charging box into the press displaced the preceding tile or briquette that has just been formed, since the mold has been lowered and the tile rests on the upper surface of the lower dies.

Variations of size, form and detail may be made as desired. One large tile or a plurality of small ones can be made by the use of suitable dies and a charging plate to correspond.

I claim as my invention:

1. A press comprising a fixed lower die, a mold surrounding said die and having its top movable to register with the top of the die, a charging device, means for moving the charging device so that the material carried thereby overlies the die, means for raising the mold and charging device, the means for moving the charging device acting after said movement is completed to withdraw the same leaving the material in the mold, an upper die, and means for moving said upper die to compress the material in the mold.

2. A press comprising a fixed lower die, a mold box surrounding said die, a charging

device, means for moving the charging device so that the material carried thereby registers with the mold, means for raising the mold and charging device, the means for moving the charging device acting after said movement is completed to withdraw the same leaving the material in the mold, an upper die, and means for applying hydraulic pressure to the upper die to compress the material in the mold.

3. A press comprising a fixed lower die, a mold surrounding said die, means for moving the mold downwardly until its upper edge registers with the top of the die, a charging device, means for moving the charging device so that the material carried thereby registers with the mold, spring means for raising the mold and charging device, the means for moving the charging device thereafter acting to withdraw the same, an upper die, and means for moving said upper die to compress the material in the mold.

4. A press comprising a lower die, a mold surrounding said die, means for moving the mold downwardly, a charging device, means for moving the charging device to deliver material to the mold, spring means for raising the mold and charging device, means for limiting this movement, the means for moving the charging device thereafter acting to withdraw the same, an upper die, and means for causing the dies to compress the material in the mold.

5. A press comprising a lower die, a mold surrounding said die, automatic means for moving the mold downwardly, means for thereafter charging the mold with material, spring means for raising said mold, means for limiting the upward movement of the mold, and an upper die to cooperate with the lower.

6. A press comprising a lower die, a mold surrounding said die, means for moving the mold downwardly, spring means for raising the mold, means for limiting the upward movement of the mold, a charging device, means for moving the charging device to register with the mold when the latter is in its lower position and withdrawing it after the mold has been raised, an upper die, and means for causing the dies to compress the material in the mold.

7. A press comprising a lower die, an upper die cooperating therewith, a mold surrounding the lower die, automatic means for moving the mold downwardly, means for thereafter charging the mold with material, spring means for raising said mold, means for limiting the upward movement of the mold, and means for moving the mold downwardly when the machine is idle.

8. A press comprising a die, a mold cooperating therewith, automatic means for moving the mold downwardly, a charging device for the mold, means for moving the charging device into register with the mold, spring means for then raising the mold and charging device, and a cam-operated device for reversing the direction of movement of the means for moving the charging device to withdraw the same.

9. A press comprising a die, a mold cooperating therewith, a charging device for the mold, a floating lever connected at one end to the charging device, link suspension for said lever so that a right line movement will be given the charging device, means engaging said lever to move the charging device, and means for reversing the direction of movement of said last-named means.

10. A press comprising a die, a mold cooperating therewith, a charging device for the mold, a floating lever connected at one end to the charging device, link suspension for said lever, hydraulic means connected to said lever to move the same and give right line movement to the charging device, and means for reversing the direction of movement of the hydraulic means.

11. A press comprising a mold, a charging device therefor, a lever connected at one end to the charging device, link suspension for the lever, hydraulic means connected to said lever to operate the same, valve mechanism for controlling the hydraulic means, and cam means for operating the valve mechanism.

12. A press comprising a die, a mold cooperating therewith, means for moving the mold downwardly, spring means for moving the mold upwardly, means for adjusting the tension of the spring means, means for limiting the upward movement of the mold, and separate means for moving the mold downwardly when the machine is not in operation.

13. A press comprising a die, a mold cooperating therewith, a charging device for the mold, a power driven shaft, cams thereon, means operated by certain of said cams for moving the mold downwardly independently of said die and means controlled by other of said cams for thereafter moving the charging device into and out of cooperating relation to the mold.

14. A press comprising a die, a mold cooperating therewith, a charging device for the mold, a power driven shaft, cams thereon, mechanical means operated by certain of said cams for moving the mold downwardly independently of said die, spring means for moving the mold upwardly, and hydraulic means controlled by other of said cams for moving the charging device into and out of cooperating relation to the mold.

15. A press comprising a die, a platen, a sub-platen connected thereto by means permitting slight relative movement therebetween, spring means tending to keep the

platen and sub-platen separated, a die rigidly connected to the sub-platen, a hydraulic plunger connected to the platen, means for applying low pressure to the plunger, means for momentarily relieving the pressure while the springs maintain the die in contact with the material, and means for thereafter applying high pressure to the plunger.

16. A press comprising a die, a platen, a second die operated by the platen, spring means permitting a slight relative movement of the platen and second die, a hydraulic plunger connected to the platen, means for applying low pressure to the plunger, means for momentarily relieving the pressure while the spring means maintain the die in contact with the material, and means for thereafter applying high pressure to the plunger.

17. A press comprising a mold, a charging device therefor, a platen, means for moving the charging device into the press, means for then raising the mold and charging device, the moving means for the charging device then acting to withdraw the same, means for admitting low pressure to the platen, means for momentarily relieving the pressure, means for thereafter admitting high pressure, means for entirely relieving the pressure, and means for lowering the mold, the cycle of operations then being repeated.

18. A press comprising a table, a mold rigid therewith, a charging device sliding on said table to a position overlying the mold, means for then raising the mold and charging device, means for withdrawing the charging device, and means for counterbalancing the table.

19. A press comprising a table, a mold rigid therewith, spring means for counterbalancing the outer end of the table, means for raising the mold and table, and a charging device sliding on said table and partaking of the vertical movements thereof.

In testimony whereof, I have hereunto subscribed my name.

FRANCIS E. STEVENSON.