(19) Europäisches Patentamt
European Patent Office
Office européen des brevets

(11) **EP 2 478 497 B1**

(12) **EUROPEAN PATENT SPECIFICATION**

(45) Date of publication and mention of the grant of the patent:
**18.02.2015 Bulletin 2015/08**

(21) Application number: **09849420.6**

(22) Date of filing: **16.09.2009**

(51) Int Cl.:
***G07D 11/00*** *(2006.01)* ***G07F 7/04*** *(2006.01)*
***G07D 9/00*** *(2006.01)* ***G07D 7/00*** *(2006.01)*
***G07F 19/00*** *(2006.01)* ***G07F 1/04*** *(2006.01)*

(86) International application number:
**PCT/JP2009/004641**

(87) International publication number:
**WO 2011/033560 (24.03.2011 Gazette 2011/12)**

(54) **ROTARY ANTI-PULLBACK UNIT OF FLETCHED FINS**

DREHENDE RÜCKZUGSSCHUTZEINHEIT MIT BEFIEDERTEN LAMELLEN

UNITÉ ANTI-RECUL ROTATIVE FORMÉE D'AILETTES DE TYPE EMPENNAGE

(84) Designated Contracting States:
**AT BE BG CH CY CZ DE DK EE ES FI FR GB GR HR HU IE IS IT LI LT LU LV MC MK MT NL NO PL PT RO SE SI SK SM TR**

(43) Date of publication of application:
**25.07.2012 Bulletin 2012/30**

(73) Proprietor: **Japan Cash Machine Co., Ltd.**
**Osaka 547-0035 (JP)**

(72) Inventors:
- **SEKI, Toru**
  **Chuo-ku, Tokyo 1030004 (JP)**
- **IZAWA, Shinya**
  **Chuo-ku, Tokyo 1030004 (JP)**

(74) Representative: **Bauer, Friedrich et al**
**Andrae I Westendorp**
**Patentanwälte Partnerschaft**
**Adlzreiterstrasse 11**
**83022 Rosenheim (DE)**

(56) References cited:
**EP-A1- 0 627 107**
**EP-A1- 1 850 294**
**JP-A- 8 279 065**
**JP-A- 2004 070 647**
**JP-A- 2005 247 497**
**JP-A- 2006 195 595**
**JP-A- 2006 338 593**
**US-A- 4 504 022**
**US-B1- 6 932 208**

Note: Within nine months of the publication of the mention of the grant of the European patent in the European Patent Bulletin, any person may give notice to the European Patent Office of opposition to that patent, in accordance with the Implementing Regulations. Notice of opposition shall not be deemed to have been filed until the opposition fee has been paid. (Art. 99(1) European Patent Convention).

EP 2 478 497 B1

## Description

[TECHNICAL FIELD]

**[0001]** This invention relates to a rotary anti-pullback unit of fletched fins for preventing unauthorized extraction of a valuable document from inside of a document handling machine by pulling a string connected to the document.

[Background Art]

**[0002]** There have been developed many bill handling machines such as vending machines, exchangers, automatic cash dispensers, automatic teller machines and bill validators mounted in gaming machines. Sometimes, these bill handling machines may encounter an illegal action by an imprudent person who fraudulently tries to extract a bill from inside of the machine by pulling out a string connected to the bill already received within the machine as a genuine one. To inhibit such a fraudulent action, some of these machines have an anti-pullback unit for preventing the bill from being taken out of the machine with any extracting tool.

**[0003]** U.S. 2006/284410A1 discloses a bill processing device which comprises a plurality of long channels disposed on a convexly bent path surface to form a bill path along a conveying direction of a bill and in parallel relation to each other in a transverse direction of the bill path, and a row of projections extending from respective side walls of the long channels. Each projection has a first surface inclined to a bottom surface side of the long channel to guide a foreign matter such as string or band conveyed with the bill to enter the long channel, and a second surface horizontal or inclined to the bottom surface side of the channel to inhibit string which has entered the long channel from exiting from the long channel. When string is connected to conveyed bill, it naturally enters long channel away from side wall to radially inward move along the first surface of the projection. Then, the string further goes into a recessed hole adjacent to the projection to effectively hinder escape of string from the recessed hole.

**[0004]** However, the disclosed bill processing device has a drawback in that disadvantageously it only has a single row of the stationary and irrotational projections not to wind or tangle string or band connected to the conveyed bill around projection and a bottom surface of the long channel. Accordingly, the prior art bill processing device would involve a large risk of inconvenient extraction of bill by drawing the string connected to bill.

**[0005]** US 6,932,208 B1 discloses an anti-pullback apparatus for bills according to the preamble of claim 1 that comprises a plurality of circular discs mounted on an axle at regular intervals and a bump extended from one side surface of each disc to form a large gap between the bump and an opposite side surface of an adjoining disc to wind up around the bump an extracting tool or a string connected to a bill conveyed into a money exchange apparatus in order to prevent extraction of the bill.

**[0006]** US 4,504,022 A represents a thread-feeding mechanism for textile machines that comprises a feed roller formed with two separate interlocked discs attached on a driven shaft in the textile machine, wherein each of the discs has respective circumferentially spaced fingers extending inward toward the other disc and inclined toward the shaft to continuously vary a feed rate of the thread by moving one of the discs along the driven shaft toward and away from the other during rotation of the driven shaft without stopping the textile machine.

**[0007]** EP 0 627 107 A1 shows a shutter arrangement that comprises a surround, a shutter rotatable about a pivot axis within the surround, a transport system for conveying documents along a transport path, and drive means for rotating the shutter to bring a slot formed in the shutter into alignment with or out of the transport path to allow documents to pass or block through the slot of the shutter.

**[0008]** EP 1 850 294 A1 indicates a validation device for valuable papers that comprises a rotor arrangement rotatably mounted in a casing, a drive device for rotating the rotor arrangement, and rollers disposed around and in contact to an outer circumferential surface of the rotor arrangement to grasp valuable papers inserted into the device between the rotor arrangement and rollers and to wind up the whole length of the valuable paper around the rotating rotor arrangement.

**[0009]** JP 2004-70647 A discloses a bill handling device that comprises a bill passageway formed with a partial bent path, slits formed in the bent path, optical sensors attached in the slits for detecting a tape connected to a bill and a blade in the slits for cutting off the tape to prevent withdrawal of the bill from the device.

**[0010]** JP8-279065 A represents a paper sheet discriminating and storing device that has a shutter formed with claws movable into and away from a passageway to allow passage of a bill but to obstruct easy extraction of the paper sheet through the shutter by drawing forth a string connected to the paper sheet.

**[0011]** JP2006-195595 A shows a bill handling device that comprises a pair of rotatable spirals disposed in a spaced relation to each other in a bill storage and an anti-pullback member formed into a zigzag shape with a plurality of thin rear protrusions that cause a string connected to the bill to come down into a dip between the rear protrusions to prevent unauthorized withdrawal of the bill from the storage.

**[0012]** JP 2005-247497 A indicates an apparatus for accumulating and dispensing paper sheets that comprises impellers arranged between a conveyance path and a storage, each of the impellers having a plurality of deformable blades radially extending from an inner boss of each impeller to cause deformable blades to slap and forcibly move paper sheets in their stored direction, storage covers arranged in the vicinity of the mating deformable blades for storing the paper sheets in the side of the

inner boss of each impeller by means of guidance by the deformable blades, and springs for resiliently urging the storage covers toward a rotation axis of the impellers to adopt long and durable deformable blades.

**[0013]** Therefore, an object of the present invention is to provide a rotary anti-pullback unit for preventing extraction of a valuable document already received or stacked within an associated device by pulling out an extracting tool connected to the document. Another object of the present invention is to provide a rotary anti-pullback unit provided with a rotatable rotor capable of reeling an extracting tool connected to a document around the rotor to inhibit fraudulent extraction of the document.

[Solution to Problem]

**[0014]** The rotary anti-pullback unit according to the present invention, comprises a rotor and a frame for rotatably supporting the rotor. The rotor comprises a plurality of disks which have two opposite radial surfaces and are arranged coaxially in a line and in axially spaced relation to each other, and a plurality of fins axially protruding from at least one radial surface of each of the disks toward an opposite radial surface of an adjoining spaced disk of said plurality of disks. The fins are fletched. Each of the disks of said plurality of disks has its opposite radial surfaces formed with the fins axially protruding therefrom. Each of the fins axially protrudes toward an opposite radial surface of the adjoining spaced disk. The fins are fletched. Each of the fins comprises a radially outwardly tapered guide surface formed at an acute angle with the radial surface of the disk at a radially outer edge of the fin, a barb formed at a radially inner edge of the fin and a hook formed at a tip of the fin between the guide surface and the barb, whereby each of the fins axially protrudes toward the opposite radial surface of the adjoining spaced disk so that the hook is closer to the opposite radial surface of the adjoining spaced disk than that of the fin axially protruding from the opposite radial surface of the adjoining spaced disk. Preferably, the rotor is rotated concurrently with a document transported along each outer periphery of the disks in contact to the transported document to radially inwardly move a flexible extracting tool connected to the document along the tapered guide surface of the fin, and bring it into engagement with the barb of the fin so that the extracting tool is tangled around the rotor and the fin or fins to prevent unduly extraction of the document.

[Brief Description of Drawings]

**[0015]** The above-mentioned and other objects and advantages of the rotary anti-pullback unit of fletched fins according to the present invention will be apparent from the following description in connection with preferred embodiments shown in the accompanying drawings wherein:

[Fig. 1]
Figure 1 is a fragmentary sectional view showing an embodiment of the rotary anti-pullback unit according to the present invention applied to a bill validator;
[Fig. 2]
Figure 2 is an entire sectional view of the bill validator shown in Figure 1;
[Fig. 3]
Figure 3 is a sectional view of the bill validator wherein a bill is transported along a passageway formed therein toward the rotary anti-pullback unit;
[Fig. 4]
Figure 4 is a sectional view of the bill validator showing the bill passing through the rotary anti-pullback unit;
[Fig. 5]
Figure 5 is a sectional view showing a string connected to the bill that has passed the rotary anti-pullback unit;
[Fig. 6]
Figure 6 is a perspective view of the bill validator that has a discriminator and a conveyer before the discriminator is drivingly connected to the conveyer;
[Fig. 7]
Figure 7 is a perspective view of the bill validator after the discriminator is drivingly connected to the conveyer;
[Fig. 8]
Figure 8 is an exploded perspective view of the conveyer;
[Fig. 9]
Figure 9 is a plan view of the conveyer with removal of an upper casing;
[Fig. 10]
Figure 10 is a perspective view of the conveyer shown in Figure 9;
[Fig. 11]
Figure 11 is a back view of the rotary anti-pullback unit;
[Fig. 12]
Figure 12 is a back bottom perspective view of the rotary anti-pullback unit;
[Fig. 13]
Figure 13 is a front bottom perspective view of the rotary anti-pullback unit;
[Fig. 14]
Figure 14 is a sectional view taken along a line XIV-XIV in Figure 11;
[Fig. 15]
Figure 15 is a sectional view taken along a line XV-XV in Figure 11;
[Fig. 16]
Figure 16 is a sectional view of a roller in the rotary anti-pullback unit;
[Fig. 17]
Figure 17 is an end perspective view of a roller used in the rotor;
[Fig. 18]

Figure 18 is a top perspective view of the roller;
[Fig. 19]
Figure 19 is a top view of the roller;
[Fig. 20]
Figure 20 is an end view of the roller;
[Fig. 21]
Figure 21 is a sectional view of the roller;
[Fig. 22]
Figure 22 is a perspective view of a rotor pulley;
[Fig. 23]
Figure 23 is a partial side view showing a string wound around the rotor;
[Fig. 24]
Figure 24 is a partial perspective view of the rotor shown in Figure 23;
[Fig. 25]
Figure 25 is a perspective view showing another embodiment of a rotor driver;
[Fig. 26]
Figure 26 is a perspective view of a rotor built in the rotor driver shown in Figure 25;
[Fig. 27]
Figure 27 is a perspective view showing still another embodiment of the rotor driver;
[Fig. 28]
Figure 28 is a perspective view of a rotor built in the rotor driver shown in Figure 27; and
[Fig. 29]
Figure 29 is a sectional view of a further embodiment showing an arcuate passage curved in an angular range of approximately 180 degrees.

[Description of Embodiments]

**[0016]** Embodiments will be described hereinafter in connection with Figures 1 to 29 of the drawings regarding the rotary anti-pullback unit of fletched fins according to the present invention applied to a document handler, namely bill validator.
Figures 6 and 7 shows a bill validator that comprises a conveyer D provided with a rotary anti-pullback unit of fletched fins according to the present invention, and a discriminator H detachably mounted on conveyer D.
**[0017]** As shown in Figures 8 to 14, conveyer D comprises a rotary anti-pullback unit 21 of fletched fins according to the instant invention. As is more clearly illustrated in Figures 11 to 14, the rotary anti-pullback unit 21 comprises a frame 43, a fletched rotor 22 rotatably mounted on frame 43, and a rotor driver 23 for rotating rotor 22 when a document or bill 70 is transported along each outer periphery of disks 25. As will be understood from Figure 16, rotor 22 comprises a plurality of rollers 24 rotatably, coaxially in a line supported on frame 43, and rotor pulleys 36, 37 rotatably and coaxially mounted with rotor 22 for their integral rotation to form a part of rotor driver 23. As shown in Figures 16 to 21, each roller 24 comprises a column 29 formed at the center of rotor 22 and rotatably supported by frame 43 at the opposite ends, a plurality of disks 25 secured on column 29 coaxially in a line and in axially spaced relation to each other to radially outwardly extend from column 29, and a plurality of featherings, fletchings or fins 26 protruding axially from and perpendicularly to at least one radial surface 25a of disks 25 toward an opposite radial surface 25a of the other adjoining spaced disk 25.
**[0018]** In other words, one radial surface 25a of one disk 25 has fins 26 axially protruding toward an opposed radial surface 25a of the other spaced adjoining disk 25 whose opposed radial surface 25a has fins 26 protruding axially in the opposite direction from that of former fins 26 toward the one radial surface 25a of the one disk 25. As shown in Figure 20, the closest two fins 26 in one and the other radial surfaces 25a are grouped into a pair with a circumferential gap 47 between paired fins 26. In the shown embodiment, each radial surface 25a of disks 25 has four axial fins 26 formed on radial surface 25a at regularly angular intervals of 90 degrees, and each disk 25 has its opposite radial surfaces 25a formed with fins 26 axially protruding therefrom. However, each radial surface 25a of disks 25 may have two or more fins 26 formed on the radial surface 25a at regularly or irregularly angular intervals as necessary. Rollers 24 are integrally formed of a plastic material selected from the groups of ABS, polyamide, polyacetal, polycarbonate resins or mixed compound thereof. Rotor 22 shown in Figure 16 comprises three rollers 24 and two rotor pulleys 36, 37 located between adjoining rollers 24, however, one of ordinary skill in the art would be able to decide number and shape of rollers 24 and rotor pulleys 36, 37 as necessary.
**[0019]** As shown in Figures 17 to 20, sector grooves 44 are formed at opposite ends of column 29 in each roller 24, and as shown in Figures 16 and 22, formed at opposite ends of bosses 29a in rotor pulleys 36, 37 are sector projections 45 that have a complementary shape to that of sector grooves 44 in column 29 so that sector projections 45 can be fit in corresponding sector grooves 44 to form a rotatable integrated structure of adjacent rotor pulleys 36, 37 and rollers 24 by their set-in coupling structure. In other words, at least one paired sector groove 44 and sector projection 45 may be formed in one and the other of column 29 of rollers 24 and rotor pulleys 36, 37, and sector projections 45 may be fit in sector grooves 44 to establish a set-in coupling structure that effectively and firmly joins adjacent rollers 24 and rotor pulleys 36, 37 for their mechanical axial connection and for their integral rotation. Other sectional shapes than sector such as circular, oval or rectangular section may be used for combined projections and grooves. In further ways, disks 25 and column 29 may be integrally formed in mold into a single roller 24 or may be connected each other by welding, bonding or adhering. Each disk 25 has its configuration formed in a mirror image with respect to the central axis of disks 25.
**[0020]** As will be apparent from Figures 12 and 13, frame 43 has a bracket 28 for rotatably supporting rotor

22. To this end, Figure 16 indicates the bracket 28 formed with a pair of bosses 28a located opposite and in direct contact to both axial ends of column 29 of rollers 24 for smooth relative rotation of rollers 24 on stationary bosses 28a. If rotor pulleys 36, 37 are located at axial ends of rotor 22, boss 29a of rotor pulleys 36, 37 may be in direct contact to boss 28a of bracket 28 without projections 45. Bracket 28 may be formed of a plastic material such as ABS, polyamide, polyacetal, polycarbonate resin or mixed compound thereof or a metallic material.

**[0021]** As is obvious from Figures 12 to 15, rotor driver 23 comprises a drive motor 32 retained in frame 43, a gear train 33 that includes a pinion 93 of drive motor 32 and power transmission gears 94 to 100 driven by drive motor 32 all in frame 43, drive pulleys 34, 35 driven by gear train 33, rotor pulleys 36, 37 coaxially mounted on rotor 22, drive belts 38, 39 mutually wound around rotor pulleys 36, 37 and around drive pulleys 34, 35 in anti-pullback unit 21, and a plurality of idle rollers 40 for retaining drive belts 38, 39 in position. Rotor pulleys 36, 37 are rotated integrally with rotor 22 by operation of drive motor 32 when bill 70 is transported along each outer periphery of disks 25 in contact to transported bill 70. When bill 70 has passed anti-pullback unit 21, drive belts 38, 39 serve to further transport bill 70 toward an outlet 82 of an inclined path 63. Frame 43 supports rotor driver 23 and anti-pullback unit 21 as a unit.

**[0022]** In the embodiment shown in Figure 16, rotor 22 comprises a support shaft 31 whose both ends are received within corresponding recesses 30 formed at the center of bosses 28a in bracket 28. A perforation or bore 24a is formed in column 29 of rollers 24, and holes 36a, 37a are formed on boss 29a of rotor pulleys 36, 37 shown in Figure 22 to dispose support shaft 31 in bore 24a and holes 36a, 37a so that support rotor 22 is rotatably mounted on support shaft 31. If column 29 of rollers 24 and boss 29a of rotor pulleys 36, 37 are joined into an integral structure via any known mechanical, welding or bonding means, columns 29 of rollers 24 and bosses 29a of rotor pulleys 36, 37 all in one unit may provide an alternative shaft to rotatably support rollers 24 on bracket 28 with omission of support shaft 31.

**[0023]** As clearly illustrated in Figures 17 to 21, each fin 26 has a radially outwardly tapered guide surface 26a formed at the radially outer edge of fin 26, a radially inward barb 26b formed at the radially inner edge of fin 26, and a hook 46 formed at the tip of fin 26 between guide surface 26a and barb 26b so that each fin 26 is generally formed into a substantially feathering or triangular shape. Tapered guide surface 26a may be formed into a flat, curved or combined flat and curved surface on the lean. Barb 26b may be formed into a flat, curved or combined flat and curved surface, or may be formed in parallel to or at a slant to the central axis of rollers 24. A pair of fins 26 are shown in Figures 20 and 21 by reference numeral 27 for illustrative convenience, so four fins 27a are formed on each radial surface 25a of disks 25 at angular intervals of 90 degrees along an axial line $L_1$ away from a diametrical central line Lo in the clockwise direction by a certain distance P, and axial line $L_1$ and diametrical central line Lo are parallel to each other.

**[0024]** In contrast, opposed radial surface 25a of spaced adjoining disks 25 is formed with four fins 27b shown in phantom at angular intervals of 90 degrees along axial line $L_1$ away from diametrical central line Lo in the counterclockwise direction by distance P. Four fins 27a and four fins 27b, namely fins 26 are formed symmetrically or in mirror image each other relative to diametrical central line Lo to alternately project in the adverse direction from each other in pairs. Thus, each fin 26 is formed at a location away from diametrical central line Lo passing through a rotation axis O of disk 25 by distance P, and each guide surface 26a of fins 26 spreads into a feathering or triangular shape in parallel to a longitudinal central plane including the diametrical central line Lo.

**[0025]** As shown in Figures 17 and 18, hook 46 at each tip of fins 26 has a flange which protrudes widthwise and inwardly or in the circumferential and radially inward directions of fin 26 to prevent an extracting tool 71 such as a string, cord or tape from escaping from a capture space 26c between barb 26b and column 29, thereby blocking fraudulent extraction of bill 70. As shown in Figure 17, each fin 26 axially protrudes from and substantially perpendicularly to radial surface 25a of disk 25 toward an opposed radial surface 25a of spaced adjoining disk 25, and guide surface 26a is formed at an acute angle with disk 25 so that hook 46 is closer to opposed radial surface 25a of spaced adjoining disk 25 than that axially protruding from the latter opposed radial surface 25a. Accordingly, opposed fins 26 extend in the adverse direction from corresponding radial surfaces 25a of spaced adjoining disks 25 with a circumferential gap 47 (Figures 19 and 23) and have an axial overlap by at least one portion of fins 26, namely the whole or part of hook 46, and part of guide surface 26a, if necessary.

**[0026]** As shown in Figures 1 to 6, conveyer D has a horizontal path 20, an arcuate passage 53 communicated with horizontal path 20, and an inclined path 63 connecting arcuate passage 53 to an outlet 82 to form a passageway 5 in all for guiding transported bill 70. Also, as shown in Figures 1 and 2, conveyer D has upper and lower guide members 51, 52 for providing respectively upper and lower walls of passageway 5. Upper guide member 51 comprises an upper plate member 54, an upper inclined member 55 slanting with respect to upper plate member 54 by a given angle and an arcuate member 66 disposed between upper plate and inclined members 54, 55. As shown in Figures 1 and 9, lower guide member 52 comprises a lower plate member 64 and a lower inclined member 65 slanting with respect to lower plate member 64 by a given angle to define an arcuate gap 67 between lower plate and inclined members 64, 65 so that rotor 22 is placed in arcuate gap 67. Arcuate passage 53 is formed by arcuate member 66 and rotor 22.

**[0027]** Arcuate passage 53 is curved around support

shaft 31 of roller 24 in an approximate angular range of 90 degrees so that each outer periphery of disks 25 is disposed in and along arcuate passage 53. Upper and lower plate members 54, 64 make up together horizontal path 20 extending from an inlet 81 of conveyer D to arcuate passage 53, and upper and lower inclined members 55, 65 make up together an inclined path 63 extending from arcuate passage 53 to an outlet 82 of conveyer D. Arcuate passage 53 is curved at an approximate angle theta = 120 degrees from horizontal path 20 to inclined path 63 around central axis 31, however, the curved angle theta may be varied in an angular range between 60 and 360 degrees. As shown in Figures 1, 2 and 8, provided in upper guide member 51 are pinch rollers 41, 42 for urging transported bill 70 on drive belts 38, 39 to sandwich bill 70 between drive belts 38, 39 and pinch rollers 41, 42 for reliable transportation of bill 70. In the shown embodiment, anti-pullback unit 21 is mounted in lower guide member 52, but, instead, it may be mounted in upper guide member 51 or straddling upper and lower guide members 51 and 52.

**[0028]** As illustrated in Figures 1, 2, 10, 23 and 24, formed with lower plate member 64 in lower guide member 52, are tongues 56 that downwardly extend from lower plate member 64 toward anti-pullback unit 21, and likewise, formed with lower inclined member 65 in lower guide member 52 are tongues 57 that upwardly extend from lower inclined member 65 toward anti-pullback unit 21. As shown in Figures 9 and 10, and especially Figure 23, each tongue 56, 57 extends toward inclined guide surfaces 26a of fins 26 and terminates before inclined guide surfaces 26a with an oblique gap 58 between each tongue 56, 57 and inclined guide surface 26a. As shown in detail especially in Figures 23 and 24, tongues 56, 57 stretch from respectively lower plate and inclined members 64, 65 both toward guide surfaces 26a of opposed disks 25 in anti-pullback unit 21 so that tongues 56, 57 are in a spaced relation to closest guide surfaces 26a to form oblique gap 58 therebetween. Each tongue 56, 57 between adjoining cutouts 59, 60 has a cutoff surface 61, 62 flush with or along by a plane passing through the central axis of support shaft 31 for roller 24.

**[0029]** As shown in Figure 2 , conveyer D comprises a lower casing 86 for forming a bottom wall of horizontal path 20, an upper casing 91 (Figure 8) disposed at the back of lower casing 86 for forming an upper wall of horizontal path 20, a connection gear 84 rotatably mounted on lower casing 86 and drivingly connected to a transport gear 85 in discrimination device H, a drive output gear 83 for transmitting rotation force to transport gear 85 via connection gear 84, a control device 87 for controlling operation of rotor driver 23, a bottom tray 88 attached at the bottom of lower casing 86, a pair of guide rails 92 formed on an upper surface of lower casing 86 for engagement with latches (not shown) in discriminator H and sliding movement of the latches along guide rails 92, and right and left casings 89 and 90 attached to respectively right and left sides of lower casing 86.

**[0030]** As shown in Figures 2 to 6, 9 and 10, discriminator H comprises a casing 1 disposed between an upper casing 19 and lower frame 17 secured on a lower casing 18 for defining passageway 5, conveyer belts 2a (Figures 9 and 10) for transporting bill 70 along horizontal path 20 of passageway 5, and a sensor device 3 having optical and magnetic sensors 3a, 3b, 3c, 3d for detecting physical features of bill 70 traveling along horizontal path 20 to produce detection signals. Control device 87 receives detection signals from sensor device 3 to control operation of conveyer belts 2a in discriminator H shown in Figures 9 and 10. Casing 1 comprises a lower casing 18 which has a lower cover 7 and a lower tray 8 for receiving a lower optical sensor 3a and other electric/electronic elements, and an upper casing 19 which has an upper tray 11 and an upper cover 12 for receiving an upper optical sensor 3b and other electric/electronic elements. Sensor device 3 comprises an upper optical sensor 3a contained in lower casing 18, an upper optical sensor 3b and a light receiving sensor 3c both contained in upper casing 19, an optical inlet sensor (not shown) for detecting insertion of bill 70 into passageway 5, and a magnetic sensor 3d for detecting iron content contained in ink printed on bill 70. Control device 87 receives detection signals from sensor device 3 to produce to conveyer D control signals which drive conveyer belts 2a and drive motor 32 and drive belts 38, 39 in anti-pullback unit 21 shown in Figures 13 and 14, depending on detection signals from sensor device 3.

**[0031]** As shown in Figures 1 to 5, lower optical sensor 3a and other electric/electronic elements are arranged between lower cover 7 and lower tray 8. Likewise, upper optical sensor and other electric/electronic elements are arranged between upper tray 11 and upper cover 12. As shown in Figures 3 to 5, attached to lower tray 8 is a drive gear 85 meshed with connection gear 84 to drive conveyer belts 2a in conveyer D shown in Figures 8 and 9. Conveyer belts 2a are disposed in horizontal path 20 through four openings 13 formed in lower cover 7 to grasp bill 70 between upper and lower conveyer belts 2a in a carrier device of discriminator H to deliver bill 70 along openings 13. Lower and upper optical sensors 3a and 3b of sensor device 3 each have a contact image sensor (CIS) which includes a plurality of light emitting elements and a plurality of photo-sensitive elements for receiving lights so that light emitting elements irradiate lights that penetrate lower cover 7 or upper tray 11, reflect on or penetrate bill 70, penetrate lower cover 7 or upper tray 11 and then are received by photo-sensitive elements.

**[0032]** In assembling the bill validator shown in Figures 1 and 2, discriminator H is attached to conveyer D by engaging latches (not shown) of discriminator H with guide rails 92, and then, discriminator H is moved into the back, sliding latches along guide rails 92 as shown in Figure 6. When latches reach the completely inserted position, an outlet (not shown) of passageway 5 in discriminator H becomes communicated with inlet 81 of arcuate passage 53 of conveyer D, and simultaneously

drive gear 85 of discriminator H comes into driving engagement with connection gear 24 of conveyer D to drive carrier device for transporting bill 70 in discriminator H by drive motor 32 in conveyer D.

**[0033]** After assemblage of the bill validator, when bill 70 is inserted into inlet 5c of discriminator H, optical inlet sensor detects insertion of bill 70 into inlet 5c to produce a detection signal to control device 87 which then starts to operate drive motor 32 in rotor driver 23 of conveyer D. Accordingly, carrier belts 2a in carrier device of discriminator H shown in Figures 9 and 10 are rotated, and concurrently, drive belts 38 and 39 in conveyer D run to rotate rotor pulleys 36, 37 along with rotor 22 in anti-pullback unit 21, and thereby bill 70 is moved in the back of passageway 5 along horizontal path 20. In this case, if string 71 is connected to a rear end of bill 70, it also is dragged into horizontal path 20 with forward movement of bill 70, while upper and lower optical sensors 3b and 3a and magnetic sensor 3d pick out physical features of bill 70 traveling along horizontal path 20 to produce detection signals to control device 87.

**[0034]** Subsequently, bill 70 is sent from horizontal path 20 in discriminator H through inlet 81 of conveyer D into arcuate passage 53 formed between disks 25 of rotor 22 and arcuate member 66 of upper guide member 51, it is then grasped between drive belts 38, 39 and pinch rollers 41, 42 and carried through arcuate passage 53 and inclined path 63 to outlet 82. At the moment, rotor 22 is rotated concurrently with bill 70 carried along outer periphery of disks 25 in contact to transported bill 70, and therefore, flexible string 71 connected to bill 70 is radially inwardly moved along inclined guide surface 26a of fin 26. In this case, string 71 extends throughout passageway 5 from horizontal path 20 through arcuate passage 53 to inclined path 63, and forward movement of drive belts 38, 39 provokes a tensile force pulling bill 70 and string 71.

**[0035]** Since tensile force will try to extend string 71 in arcuate passage 53 by airline or minimal distance, tensile force or tension possibly as well as the gravity, presses string 71 around guide surfaces 26a of fins 26 in arcuate passage 53 so that string 71 may forcibly be radially inwardly moved through oblique gap 58 formed between tongues 56, 57 and guide surfaces 26a and also through circumferential gap 47 formed between opposed fins 26 while string 71 is sliding on guide surfaces 26a of opposed fins 26 under the tension and its own gravity, and finally string 71 can be entrapped into capture space 26c between barb 26b and column 29 as shown in Figures 5, 23 and 24, and brought into engagement with barb 26b of fin 26. In other words, rotation of rotor 22 and guidance by tongue 56, 57 facilitate movement of string 71 connected to bill 70 through oblique gap 58 formed between tongue 56, 57 and fin 26 and also through circumferential gap 47 formed between fins 26 so that string 71 is brought into engagement with at least one of fins 26 or at least one barb 26b of fins 26. At that time, resultant tension presses flexible string 71 on guide surfaces 26a of fins 26, and causes it to radially inwardly slip along guide surfaces 26a and thereby go through oblique gap 58 formed between tongues 56, 57 and guide surfaces 26a and through a circumferential gap 47 formed between opposed fins 26 into capture space 26c between barb 26b and column 29. Therefore, flexible string 71 smoothly goes into capture space 26c, and rotation of rotor 22 causes flexible string 71 to tangle around column 29 and fin or fins 26.

**[0036]** In this case, once string 71 is entrapped in capture space 26c, as shown in Figures 1 and 2, rotation of rotor 21 causes string 71 to be, inextricably without access to rotor 21, wound up around rotor 21 through capture space 26c and tangled with barb or barbs 26b of fins 26, and this certainly prevents unduly pullback or extraction of bill 70 and obviously improves in security and reliability of bill validator. To this end, each flange 46a of hook 46 at each tip of fins 26 effectively prevents string 71 from escaping from capture space 26c between barb 26b and column 29. When regular staff moves upper guide member 51 of conveyer D to an opened position (not shown) to gain access to rotor 21, he can readily remove string 71 from exposed column 29.

**[0037]** The bill validator in this embodiment does the following operations:

(1) Drive belts 38, 39 and pinch rollers 41, 42 of rotor driver 23 serve to transport bill 70 past anti-pullback unit 21 along inclined path 63, dragging or pulling string 71 connected to bill 70 to produce tension in string 71.

(2) Resultant tension presses string 71 on guide surfaces 26a of circumferentially adjoining fins 26 by airline distance, and causes flexible string 71 to radially inwardly slip along guide surfaces 26a, thereby go through oblique gap 58 formed between tongues 56, 57 and guide surfaces 26a and through circumferential gap 47 formed between opposed fins 26, and finally enter capture space 26c between barb 26b and column 29 as shown in Figures 5, 23 and 24.

(3) When flexible string 71 goes into capture space 26c, rotation of rotor 22 causes flexible string 71 to tangle around column 29 and fin or fins 26 as shown in Figures 1 and 2.

(4) When the anti-pullback unit 21 is mounted in conveyer D, discriminator H can has a simple construction and shorter passageway 5 without anti-pullback unit 21.

(5) Each disk 25 may be formed into a shape in mirror image or in symmetric configuration about the central axis, and rotor 22 has no initial position, and therefore, although rotor 22 has rotated to transport bill 70 toward outlet 82, rotor 22 does not need to be returned to its initial position to transport a subsequent bill 70.

**[0038]** Embodiments of the present invention may be modified in various ways without limitation to the forego-

ing embodiments. For example, the anti-pullback unit 21 may be mounted in discriminator H in place of or in addition to that in conveyer D. In the above-mentioned embodiments, rotor 22 may be drivingly connected to a rotor driver 23 to aggressively rotate rotor 22 independently of contact to transported bill 70. Thus, the arrangement can inextricably wind up string 71 around rotor 22 and firmly engage string 71 with barb 26b of fin 26 to prevent unduly pullback or extraction of bill 70. However, the invention contemplates another construction of rotor 22 simply rotatably supported by frame 43 without rotor driver 23 so that rotor 22 can be automatically rotated by a frictional force applied to disks 25 by transporting bill 70 in contact to each outer periphery of disks 25.

**[0039]** Accordingly, a specific embodiment of the present invention does not necessarily require rotor driver 23 and rotor pulleys 36 and 37. Rotor pulleys 36, 37 may be mounted not between rollers 41, 42 but at one end or at opposite ends of rotor 22. As shown in Figures 25 and 26, a passive gear 48 may be attached to rotor 22 to rotate it by drive motor 32 via pinion 93 and power transmission gears 94 to 100 without rotor pulleys 36, 37. Alternatively, as shown in Figures 27 and 28, another passive gear 49 may be attached to rotor 22 or roller 50 for their integral rotation. In lieu of regularly angular intervals of 90 degrees, fins 26 may be formed on disk 25 at regularly or irregularly different angular intervals.

**[0040]** Figure 29 shows a further embodiment of an arcuate passage 53 curved over an angular range theta of approximately 180 degrees around support shaft 31 on the way of horizontal path 20. Bill 70 that has passed arcuate passage 53 and rotor 22, is further carried through horizontal exit path 20a communicated with outlet 82 by pulling force of rotor driver 23 while dragging or pulling string 71 connected to bill 70 and producing tensile force or tension in string 71. In this embodiment, arcuate passage 53 is formed in a circular gap defined between outer periphery of disks 25 and upper and lower guide members 51, 52 disposed in radially spaced relation to disks 25. Horizontal exit path 20a may be connected to outlet 82 in the horizontal condition or connected to outlet 82 through an inclined or curved path.

**[0041]** While the foregoing embodiments refer to handling of bill or document as a valuable document, however, it would be apparent that the arrangement according to the present invention can be applied to handling of valuable documents such as currencies, bank notes, tenders, coupons, scrip other than bill.

[Industrial Applicability]

**[0042]** The present invention may be applied to document handlers that need to prevent or block unauthorized extraction of a document received in the document handler by drawing an extracting tool connected to the document.

## Claims

1. A rotary anti-pullback unit comprising: a rotor (22) and a frame (43) for rotatably supporting the rotor (22),
wherein the rotor (22) comprises a plurality of disks (25) which have two opposite radial surfaces (25a) and are arranged coaxially in a line and in axially spaced relation to each other, and a plurality of fins (26) axially protruding from at least one radial surface (25a) of each of the disks (25) toward an opposite radial surface (25a) of an adjoining spaced disk (25) of said plurality of disks (25),
**characterized in that** the fins (26) are fletched,
each of the disks (25) of said plurality of disks (25) has its opposite radial surfaces (25a) formed with the fins (26) axially protruding therefrom, and
each of the fins (26) comprises a radially outwardly tapered guide surface (26a) formed at an acute angle with the radial surface (25a) of the disk (25) at a radially outer edge of the fin (26), a barb (26b) formed at a radially inner edge of the fin (26) and a hook (46) formed at a tip of the fin (26) between the guide surface (26a) and the barb (26b), whereby each of the fins (26) axially protrudes toward the opposite radial surface (25a) of the adjoining spaced disk (25) so that the hook (46) is closer to the opposite radial surface (25a) of the adjoining spaced disk (25) than that of the fin (26) axially protruding from the opposite radial surface (25a) of the adjoining spaced disk (25).

2. The rotary anti-pullback unit of claim 1, wherein the rotor (22) has a column (29) formed at the center of the rotor (22),
the column (29) are rotatably supported by the frame (43) at the opposite ends, and
a plurality of the disks (25) are secured in axially spaced relation from each other on the column (29) to radially outwardly extend from the column (29).

3. The rotary anti-pullback unit of claim 1, wherein the rotor (22) is rotated concurrently with a document (70) transported along each outer periphery of the disks (25) in contact to the transported document (70) to radially inwardly move an extracting tool (71) connected to the document (70) along the tapered guide surface (26a) of the fin (26), and bring the extracting tool (71) into engagement with the barb (26b) of the fin (26).

4. The rotary anti-pullback unit of claim 3, further comprising a rotor driver (23) for rotating the rotor (22) when the document (70) is transported along each outer periphery of the disks (25).

5. The rotary anti-pullback unit of claim 2, wherein the frame (43) comprises a bracket (28) for rotatably bearing the rotor (22), and

the bracket (28) has a pair of support bosses (28a) located opposite both axial ends of the rotor (22).

**6.** The rotary anti-pullback unit of claim 4, wherein the rotor driver (23) comprises a drive motor (32), and at least one rotor pulley (36, 37) or gear (48, 49) coaxially mounted on the rotor (22) for integral rotation therewith by operation of the drive motor (32) when the document (70) is transported along each outer periphery of the disks (25) in contact to the transported document (70).

**7.** The rotary anti-pullback unit of claim 1, wherein each of the disks (25) has its configuration formed in a mirror image with respect to the central axis of the disks (25).

**8.** The rotary anti-pullback unit of claim 4, wherein the rotor driver (23) comprises a drive motor (32), a gear train (33) driven by the drive motor (32), at least one drive pulley (34, 35) driven by the gear train (33), at least one rotor pulley (36, 37) coaxially mounted on the rotor (22) and a drive belt (38, 39) mutually wound around the drive pulley (34, 35) and the rotor pulley (36, 37).

**9.** The rotary anti-pullback unit of claim 8, further comprising at least one pinch roller (41, 42) for urging the document (70) on the drive belt (38, 39) for sandwiching the document (70) between the drive belt (38, 39) and pinch roller (41, 42) for transportation of the document (70).

**10.** The rotary anti-pullback unit of claim 1, wherein the hook (46) protrudes in the circumferential and radially inward directions of the fin (26).

**11.** The rotary anti-pullback unit of claim 1, wherein opposed fins (26) extend in an adverse direction from the corresponding radial surfaces (25a) of the spaced adjoining disks (25) with a circumferential gap (47) between each pair of closest opposed fins (26), and
the opposed fins of said each pair of closest opposed fins (26) have an axial overlap by at least one portion of the fins (26).

**12.** The rotary anti-pullback unit of claim 1, wherein each radial surface (25a) of the disks (25) has two or more fins (26) formed on the radial surface (25a) at regularly or irregularly angular intervals.

**13.** The rotary anti-pullback unit of claim 1, wherein one radial surface (25a) of one disk (25) has the fins (26) axially protruding toward the opposite radial surface (25a) of the respective spaced adjoining disk (25) whose opposite radial surface (25a) has the fins (26) axially and in the opposite direction protruding toward the one radial surface (25a) of the one disk (25), and
the closest two fins (26) protruding respectively from the one radial surface and the opposite radial surface (25a) are grouped into a pair with a circumferential gap (47) between the paired fins (26).

**14.** The rotary anti-pullback unit of claim 1, wherein each of the fins (26) is formed at a location away from a diametric plane ($L_0$) passing through a rotation axis (O) of the disk (25) by a certain distance (P), and
each guide surface (26a) of the fins (26) spreads into a feathering or triangular shape in parallel to the diametric plane ($L_0$).

**Patentansprüche**

**1.** Drehbare Rückzugsverbindungseinheit umfassend:
einen Rotor (22) und einen Rahmen (43) zum drehbaren Stützen des Rotors (22),
wobei der Rotor (22) mehrere Scheiben (25), die zwei gegenüberliegende radiale Oberflächen (25a) aufweisen und koaxial in einer Linie und in axial beabstandeter Beziehung zueinander angeordnet sind, und mehrere Rippen (26) umfasst, die axial von zumindest einer radialen Oberfläche (25a) jeder der Scheiben (25) zu einer gegenüberliegenden radialen Oberfläche (25a) einer angrenzenden beabstandeten Scheibe (25) der mehreren Scheiben (25) hin vorragt,
**dadurch gekennzeichnet, dass** die Rippen (26) pfeilfederförmig sind,
jede der Scheiben (25) der mehreren Scheiben (25) an ihren gegenüberliegenden radialen Oberflächen (25a) mit den Rippen (26) ausgebildet ist, die axial davon vorragen, und
jede der Rippen (26) eine sich radial nach außen verjüngende Führungsfläche (26a), die in einem spitzen Winkel zur radialen Oberfläche (25a) der Scheibe (25) an einer radial äußeren Kante der Rippe (26) ausgebildet ist, einen Bart (26b), der an einer radial inneren Kante der Rippe (26) ausgebildet ist, und einen Haken (46) umfasst, der an einer Spitze der Rippe (26) zwischen der Führungsfläche (26a) und dem Bart (26b) ausgebildet ist, wobei jede der Rippen (26) axial zur gegenüberliegenden radialen Oberfläche (25a) der angrenzenden beabstandeten Scheibe (25) hin vorragt, sodass der Haken (46) näher an der gegenüberliegenden radialen Oberfläche (25a) der angrenzenden beabstandeten Scheibe (25) als jener der Rippe (26) ist, die axial von der gegenüberliegenden radialen Oberfläche (25a) der angrenzenden beabstandeten Scheibe (25) vorragt.

**2.** Drehbare Rückzugsverbindungseinheit nach Anspruch 1, wobei der Rotor (22) eine Säule (29) aufweist, die am Zentrum des Rotors (22) ausgebildet

ist,
die Säule (29) drehbar an den gegenüberliegenden Enden durch den Rahmen (43) gestützt ist, und
mehrere der Scheiben (25) derart in axial beabstandeter Beziehung zueinander an der Säule (29) befestigt sind, dass sie von der Säule (29) radial nach außen verlaufen.

**3.** Drehbare Rückzugsverbindungseinheit nach Anspruch 1, wobei der Rotor (22) gleichzeitig mit einem Dokument (70), das jeden Außenumfang der Scheiben (25) entlang befördert wird, in Kontakt mit dem beförderten Dokument (70) zum Bewegen eines Auszugswerkzeugs (71), das mit dem Dokument (70) verbunden ist, radial nach innen entlang der sich verjüngenden Führungsfläche (26a) der Rippe (26) und Verbringen des Auszugswerkzeugs (71) in Eingriff mit dem Stachel (26b) der Rippe (26) gedreht wird.

**4.** Drehbare Rückzugsverbindungseinheit nach Anspruch 3, ferner umfassend einen Rotorantrieb (23) zum Drehen des Rotors (22), wenn das Dokument (70) jeden Außenumfang der Scheiben (25) entlang befördert wird.

**5.** Drehbare Rückzugsverbindungseinheit nach Anspruch 2, wobei der Rahmen (43) einen Träger (28) zum drehbaren Lagern des Rotors (22) umfasst, und der Träger (28) ein Paar Stützansätze (28a) aufweist, die gegenüber beiden axialen Enden des Rotors (22) angeordnet sind.

**6.** Drehbare Rückzugsverbindungseinheit nach Anspruch 4, wobei der Rotorantrieb (23) einen Antriebsmotor (32) und zumindest eine Rotorriemenscheibe (36, 37) oder Zahnrad (48, 49) umfasst, die/der am Rotor (22) zur einstückigen Drehung damit durch Betrieb des Antriebsmotors (32) angebracht ist, wenn das Dokument (70) jeden Außenumfang der Scheiben (25) in Kontakt mit dem beförderten Dokument (70) befördert wird.

**7.** Drehbare Rückzugsverbindungseinheit nach Anspruch 1, wobei die Konfiguration jeder der Scheiben (25) spiegelbildlich bezüglich der Mittelachse der Scheiben (25) ausgebildet ist.

**8.** Drehbare Rückzugsverbindungseinheit nach Anspruch 4, wobei der Rotorantrieb (23) einen Antriebsmotor (32), einen Getriebezug (33), der durch den Antriebsmotor (32) angetrieben ist, zumindest eine Antriebsriemenscheibe (34, 35), die durch den Getriebezug (33) angetrieben ist, zumindest eine Rotorriemenscheibe (36, 37), die koaxial am Rotor (22) angebracht ist, und einen Treibriemen (38, 39) umfasst, der wechselseitig um die Antriebsriemenscheibe (34, 35) und die Rotorriemenscheibe (36, 37) gewickelt ist.

**9.** Drehbare Rückzugsverbindungseinheit nach Anspruch 8, ferner umfassend zumindest eine Druckrolle (41, 42) zum Drücken des Dokuments (70) auf den Antriebsriemen (38, 39) zum Einschieben des Dokuments (70) zwischen dem Antriebsriemen (38, 39) und der Druckwalze (41, 42) zur Beförderung des Dokuments (70).

**10.** Drehbare Rückzugsverbindungseinheit nach Anspruch 1, wobei der Haken (46) in der Umfangs- und radialen Richtung nach innen der Rippe (26) vorragt.

**11.** Drehbare Rückzugsverbindungseinheit nach Anspruch 1, wobei gegenüberliegende Rippen (26) gegenläufig von den entsprechenden radialen Oberflächen (25a) der beabstandeten angrenzenden Scheiben (25) mit einem umfänglichen Spalt (47) zwischen jedem Paar am nächsten gegenüberliegender Rippen (26) verlaufen, und
die gegenüberliegenden Rippen jedes Paars am nächsten gegenüberliegender Rippen (26) eine axiale Überdeckung um zumindest einen Abschnitt der Rippen (26) aufweisen.

**12.** Drehbare Rückzugsverbindungseinheit nach Anspruch 1, wobei jede radiale Oberfläche (25a) der Scheiben (25) zwei oder mehr Rippen (26) aufweist, die auf der radialen Oberfläche (25a) in regelmäßigen oder unregelmäßigen Winkelabständen ausgebildet sind.

**13.** Drehbare Rückzugsverbindungseinheit nach Anspruch 1, wobei eine radiale Oberfläche (25a) einer Scheibe (25) die Rippen (26) axial zur gegenüberliegenden radialen Oberfläche (25a) der jeweiligen beabstandeten angrenzenden Scheibe (25) hin vorragend aufweist, deren gegenüberliegende radiale Oberfläche (25a) die Rippen (26) axial und in der Gegenrichtung zu der einen radialen Oberfläche (25a) der einen Scheibe (25) hin vorragend aufweist, und
die engsten zwei Rippen (26), die jeweils von der einen radialen Oberfläche und der gegenüberliegenden radialen Oberfläche (25a) vorragen, zu einem Paar mit einem umfänglichen Spalt (47) zwischen den gepaarten Rippen (26) gruppiert sind.

**14.** Drehbare Rückzugsverbindungseinheit nach Anspruch 1, wobei jede Rippe (26) an einer Stelle ausgebildet ist, die von einer diametrischen Ebene ($L_0$), welche eine Drehachse (O) der Scheibe (25) durchläuft, um einen bestimmten Abstand (P) entfernt ist, und
sich jede Führungsfläche (26a) der Rippen (26) zu einer Pfeilfeder- oder Dreiecksform parallel zur diametrischen Ebene ($L_0$) verbreitet.

## Revendications

1. Unité rotative anti-recul comprenant : un rotor (22) et un cadre (43) pour supporter en rotation le rotor (22),
dans laquelle le rotor (22) comprend une pluralité de disques (25) qui ont deux surfaces radiales opposées (25a) et qui sont agencés coaxialement dans une ligne et en relation axialement espacés les uns par rapport aux autres, et une pluralité d'ailettes (26) qui se projettent axialement depuis au moins une surface radiale (25a) de chacun des disques (25) vers une surface radiale opposée (25a) d'un disque adjacent espacé (25) de ladite pluralité de disques (25),
**caractérisé en ce que** les ailettes (26) sont empennées,
chacun des disques (25) de ladite pluralité de disques (25) est tel que ses surfaces radiales opposées (25a) sont formées avec les ailettes (26) qui se projettent axialement de celui-ci, et
chacune des ailettes (26) comprend une surface de guidage effilée radialement vers l'extérieur (26a) formée sous un angle aigu avec la surface radiale (25a) du disque (25) à une bordure radialement extérieure de l'ailette (26), un ardillon (26b) formé à une bordure radialement intérieure de l'ailette (26) et un crochet (46) formé à un embout de l'ailette (26) entre la surface de guidage (26a) et l'ardillon (26b), grâce à quoi chacune des ailettes (26) se projette axialement vers la surface radiale opposée (25a) du disque adjacent espacé (25) de telle façon que le crochet (46) est plus rapproché de la surface radiale opposée (25a) du disque adjacent espacé (25) que celui de l'ailette (26) qui se projette axialement depuis la surface radiale opposée (25a) du disque adjacent espacé (25).

2. Unité rotative anti-recul selon la revendication 1, dans laquelle le rotor (22) comprend une colonne (29) formée au centre du rotor (22),
la colonne (29) est supportée en rotation par le cadre (43) aux extrémités opposées, et
une pluralité de disques (25) sont fixés en relation axialement espacée les uns par rapport aux autres sur la colonne (29) de manière à s'étendre radialement vers l'extérieur depuis la colonne (29).

3. Unité rotative anti-recul selon la revendication 1, dans laquelle le rotor (22) est en rotation simultanément avec un document (70) transporté le long de chaque périphérie extérieure des disques (25) en contact avec le document transporté (70) pour déplacer radialement vers l'intérieur un outil d'extraction (71) connecté au document (70) le long de la surface de guidage effilée (26a) de l'ailette (26), et amène l'outil d'extraction (71) en engagement avec l'ardillon (26b) de l'ailette (26).

4. Unité rotative anti-recul selon la revendication 3, comprenant en outre un entraînement de rotor (23) pour mettre en rotation le rotor (22) quand le document (70) est transporté le long de chaque périphérie extérieure des disques (25).

5. Unité rotative anti-recul selon la revendication 2, dans laquelle le cadre (43) comprend une platine (28) pour porter le rotor en rotation (22), et
la platine (28) comporte une paire de bossages de support (28a) situés à l'opposé des deux extrémités axiales du rotor (22).

6. Unité rotative anti-recul selon la revendication 4, dans laquelle l'entraînement de rotor (23) comprend un moteur d'entraînement (32) et au moins une poulie de rotor (36, 37) ou un engrenage (48, 49), monté coaxialement sur le rotor (22) pour une rotation intégrale avec celui-ci par fonctionnement du moteur d'entraînement (32) quand le document (70) est transporté le long de chaque périphérie extérieure des disques (25) en contact avec le document transporté (70).

7. Unité rotative anti-recul selon la revendication 1, dans laquelle chacun des disques (25) présente une configuration formée dans une image symétrique par rapport à l'axe central des disques (25).

8. Unité rotative anti-recul selon la revendication 4, dans laquelle l'entraînement de rotor (23) comprend un moteur d'entraînement (32), un train d'engrenages (33) entraîné par le moteur d'entraînement (32), au moins une poulie d'entraînement (34, 35) entraînée par le train d'engrenages (33), au moins une poulie de rotor (36, 37) montée coaxialement sur le rotor (22) et une courroie d'entraînement (38, 39) enroulée mutuellement autour de la poulie d'entraînement (34, 35) et de la poulie de rotor (36, 37).

9. Unité rotative anti-recul selon la revendication 8, comprenant en outre au moins un rouleau pinceur (41, 42) pour forcer le document (70) sur la courroie d'entraînement (38, 39) et prendre en sandwich le document (70) entre la courroie d'entraînement (38, 39) et le rouleau pinceur (41, 42) pour le transport du document (70).

10. Unité rotative anti-recul selon la revendication 1, dans laquelle le crochet (46) se projette dans la direction circonférentielle et dans la direction radiale vers l'intérieur de l'ailette (26).

11. Unité rotative anti-recul selon la revendication 1, dans laquelle des ailettes opposées (26) s'étendent dans une direction inverse depuis les surfaces radiales correspondantes (25a) des disques adjacents espacés (25) avec un intervalle circonférentiel (47)

entre chaque paire d'ailettes opposées (26) les plus proches, et
les ailettes opposées (26) de chacune desdites paires d'ailettes opposées les plus proches ont un chevauchement axial sur au moins une portion des ailettes (26).

**12.** Unité rotative anti-recul selon la revendication 1, dans laquelle chaque surface radiale (25a) des disques (25) comprend deux ou plusieurs ailettes (26) formées sur la surface radiale (25a) à intervalles angulaires réguliers ou irréguliers.

**13.** Unité rotative anti-recul selon la revendication 1, dans laquelle une surface radiale (25a) d'un disque (25) est telle que les ailettes (26) se projettent axialement vers la surface radiale opposée (25a) de l'autre disque adjacent espacé respectif (25), dont la surface radiale opposée (25a) est telle que les ailettes (26) se projettent axialement et dans la direction opposée vers la première surface radiale (25a) dudit disque (25), et
les deux ailettes les plus proches (26) qui se projettent respectivement depuis ladite surface radiale et depuis la surface radiale opposée (25a) sont groupées en une paire avec un intervalle circonférentiel (47) entre la paire d'ailettes (26).

**14.** Unité rotative anti-recul selon la revendication 1, dans laquelle chacune des ailettes (26) est formée un emplacement en éloignement d'un plan diamétral ($L_0$) qui passe par un axe de rotation (O) du disque (25) à une certaine distance (P), et
chaque surface de guidage (26a) des ailettes (26) s'étale sous une forme en éventail ou une forme triangulaire parallèle au plan diamétral ($L_0$).

[Fig. 1]

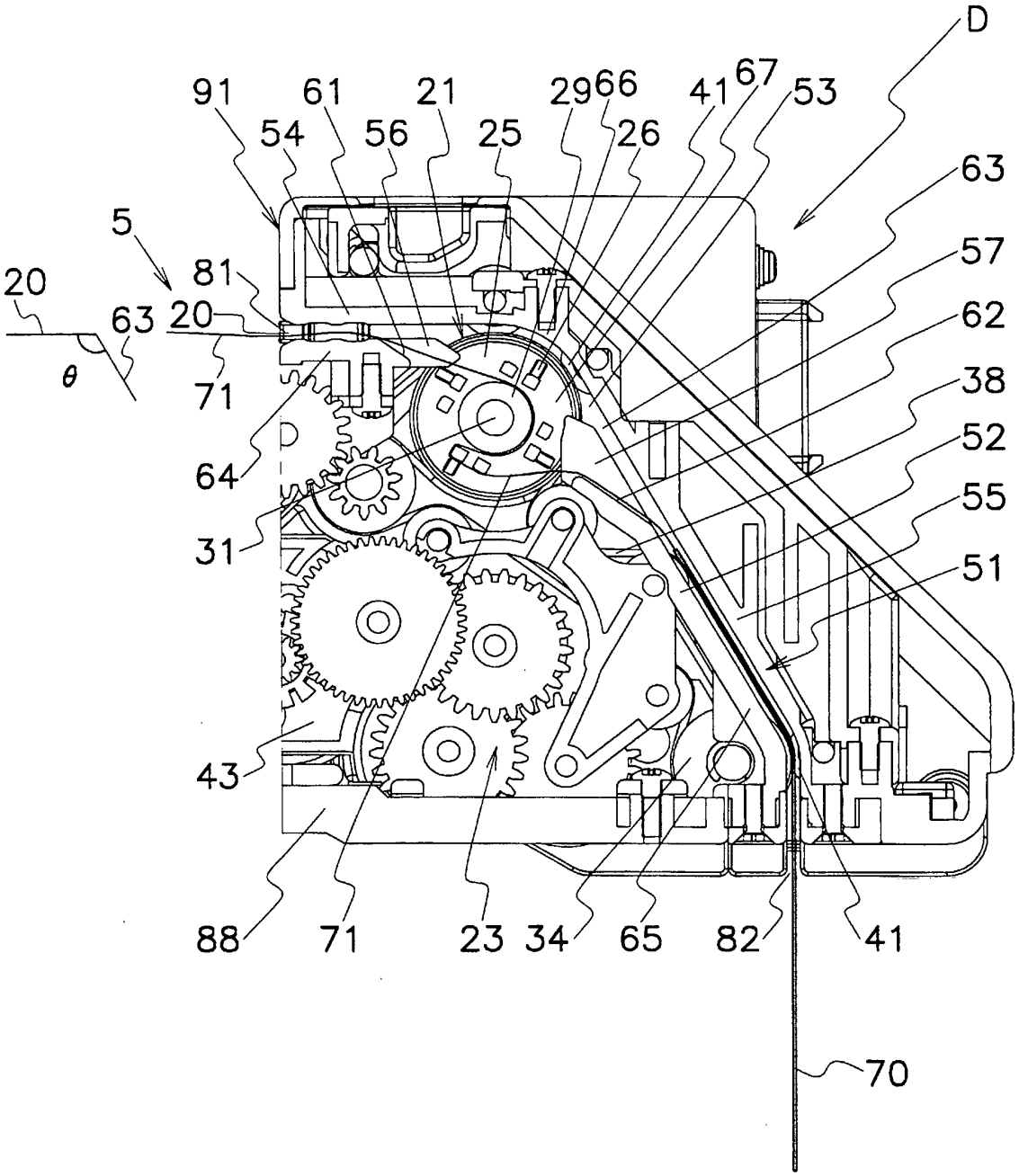
D
91
61
21
29
66
41
67
53
54
56
25
26
63
5
81
57
20
20
63
62
θ
71
38
64
52
55
31
51
43
88
71
23
34
65
82
41
70

[Fig. 2]

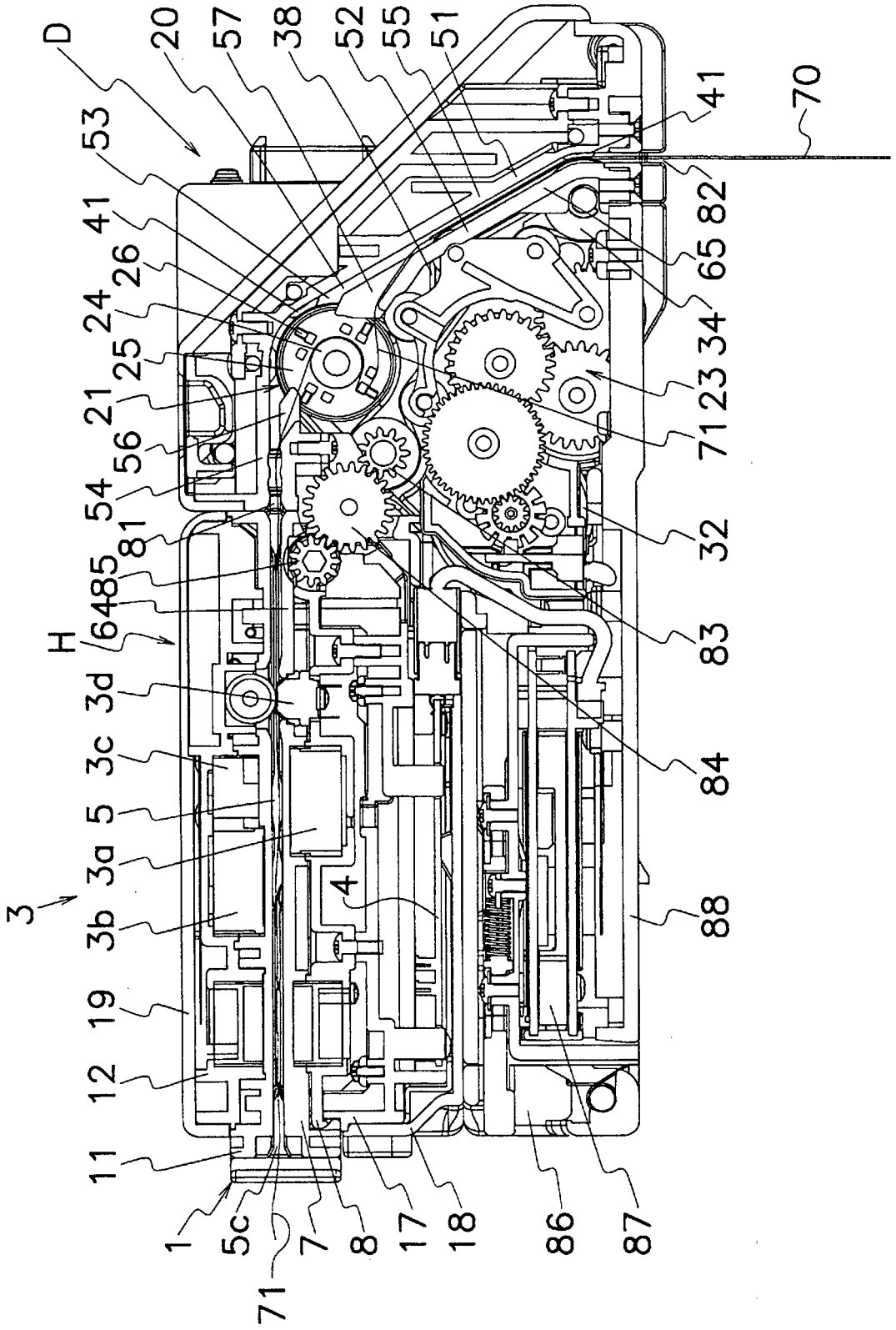
D
20
57
38
52
55
51
41
70
53
41
26
24
25
21
56
54
81
85
64
H
3d
3c
5
3a
3
3b
19
12
11
1
5c
71
7
8
17
18
86
87
4
88
84
83
32
71
23
34
65
82

[Fig. 3]

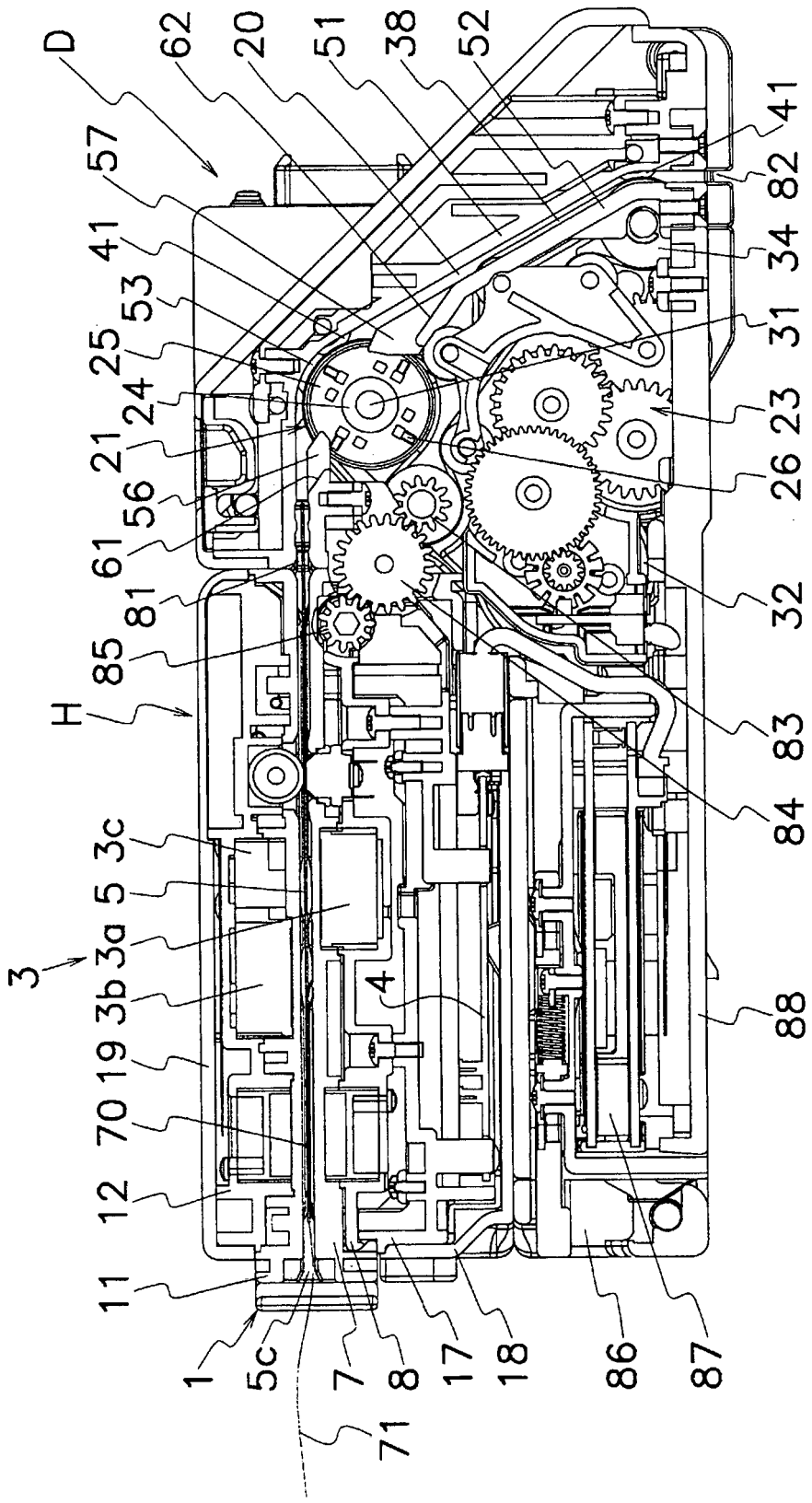
D
62
20
51
38
52
41
57
82
41
34
53
31
25
24
23
21
26
56
61
32
81
85
H
83
84
3c
5
3a
3
3b
4
88
19
70
12
11
1
5c
7
8
17
18
86
87
71

[Fig. 4]

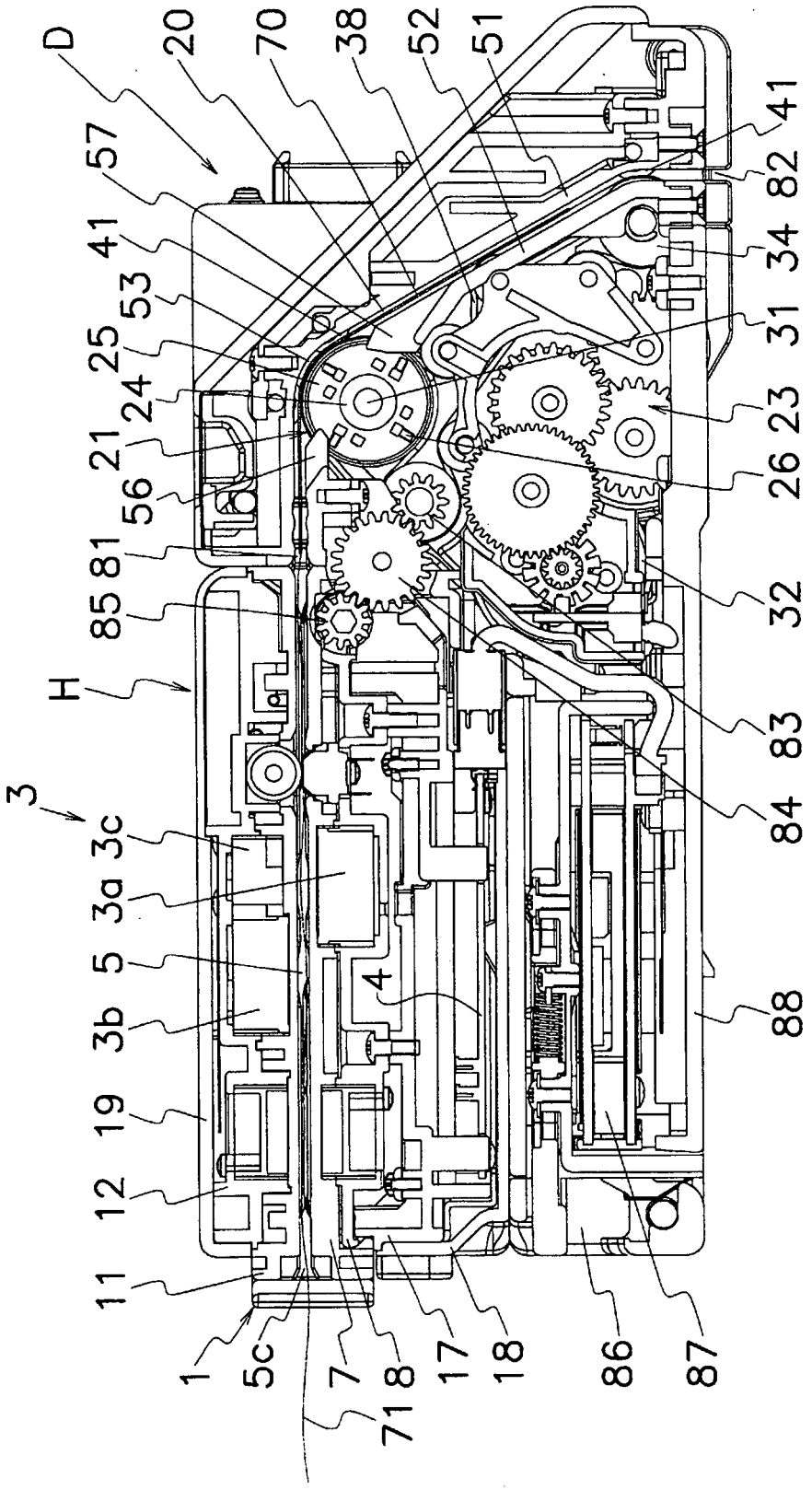
D
20
70
38
52
51
41
57
82
41
34
53
31
25
24
23
21
26
56
81
32
85
H
83
84
3
3c
3a
5
4
88
3b
19
12
11
1
5c
7
8
17
18
86
87
71

[Fig. 5]

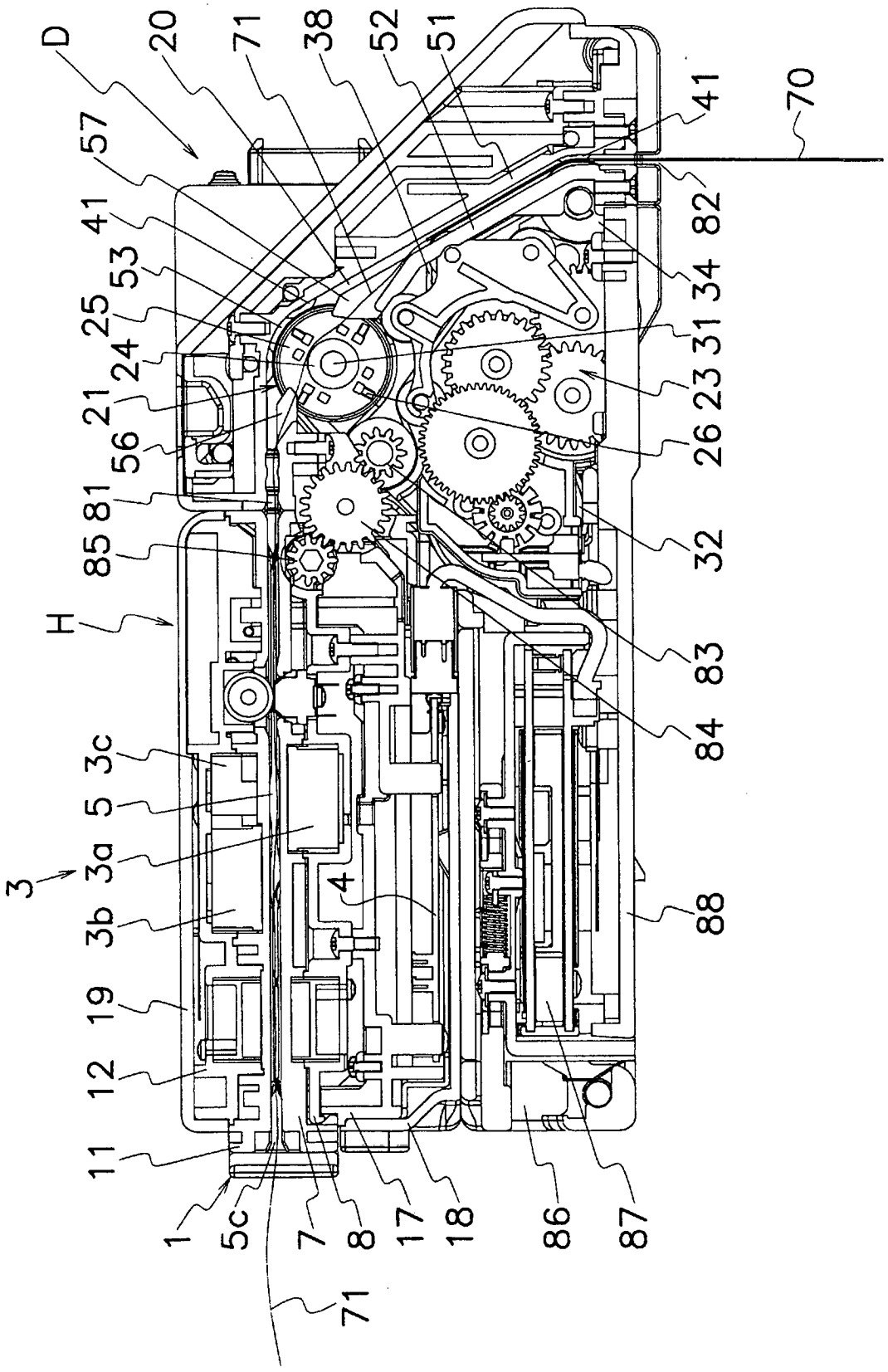
D
20
71
38
52
51
41
70
57
41
82
53
34
25
31
24
23
21
26
56
81
32
85
H
83
84
3c
5
3a
3
4
88
3b
19
12
11
1
5c
7
8
17
18
86
87
71

[Fig. 6]

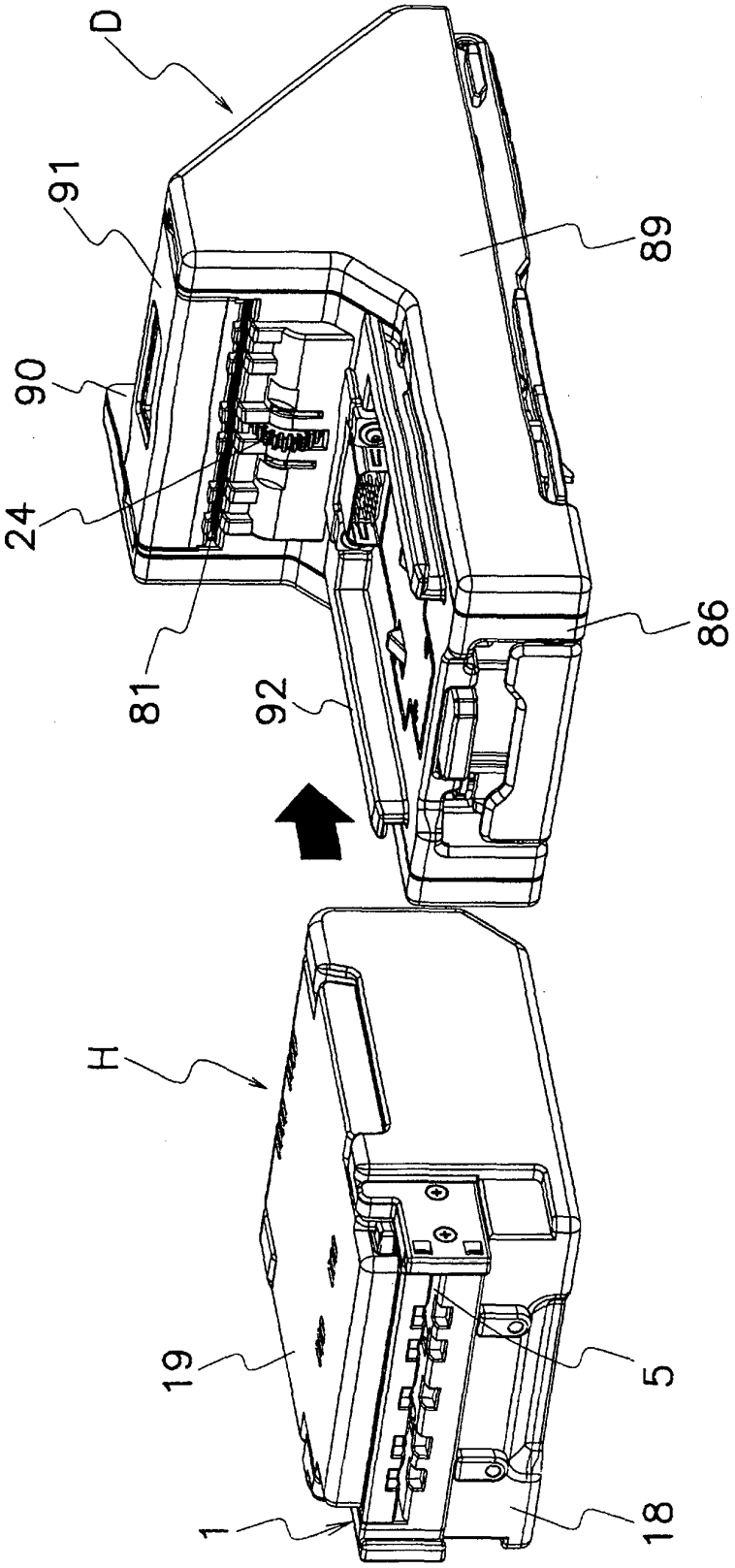

[Fig. 7]

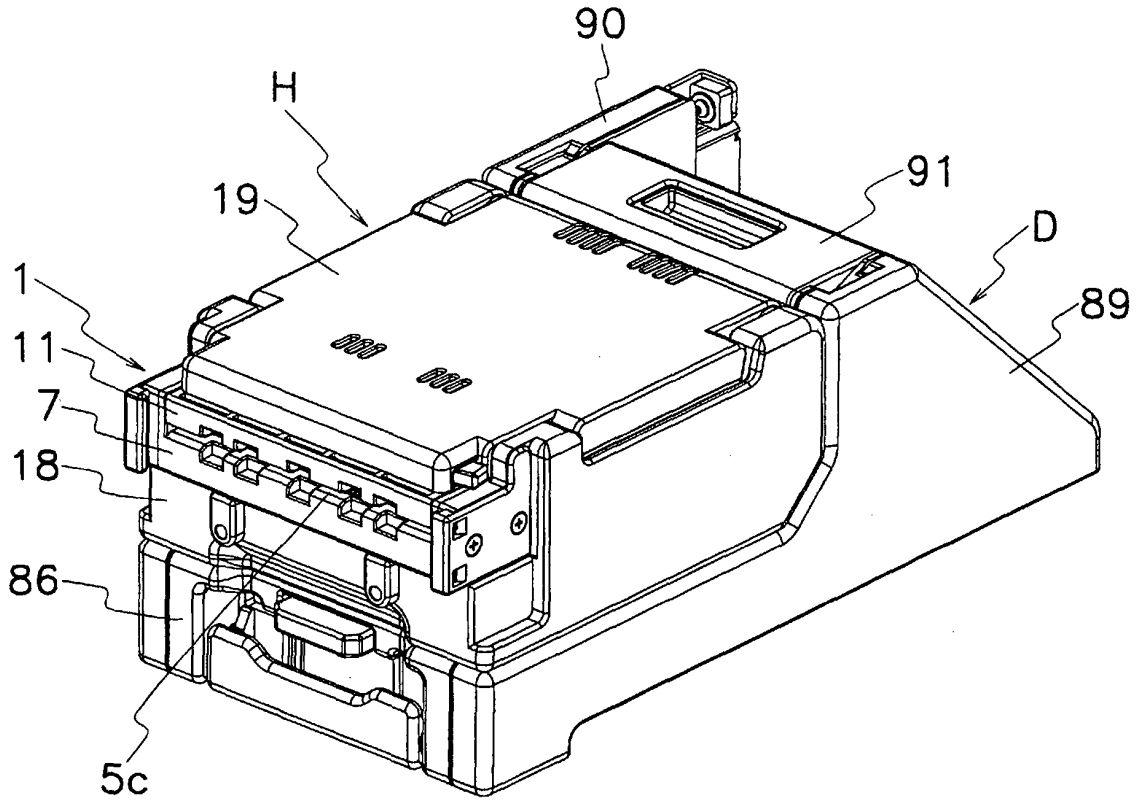

[Fig. 8]

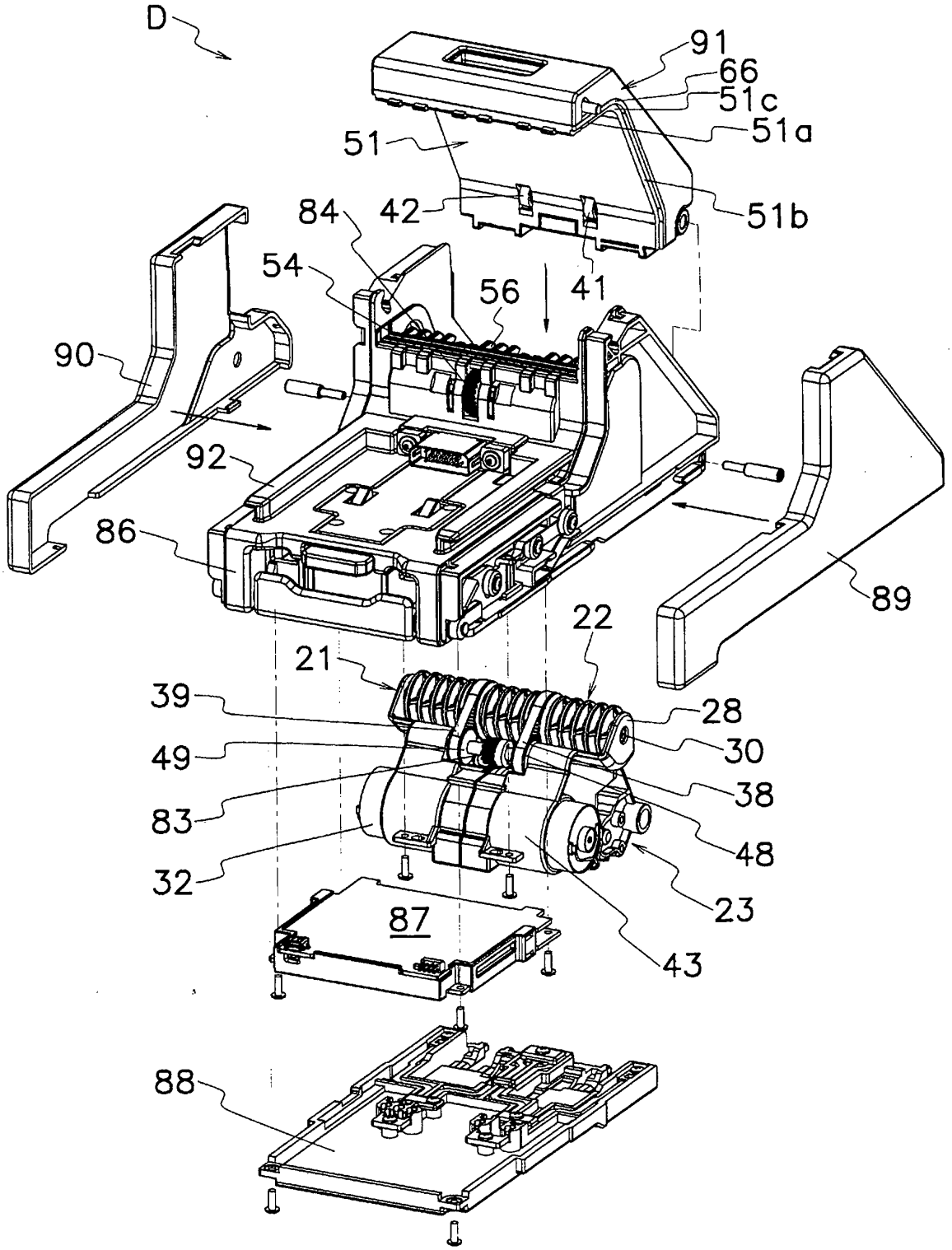
D
91
66
51c
51a
51
51b
84
42
54
56
41
90
92
86
89
22
21
39
28
49
30
38
83
48
32
23
87
43
88

[Fig. 9]

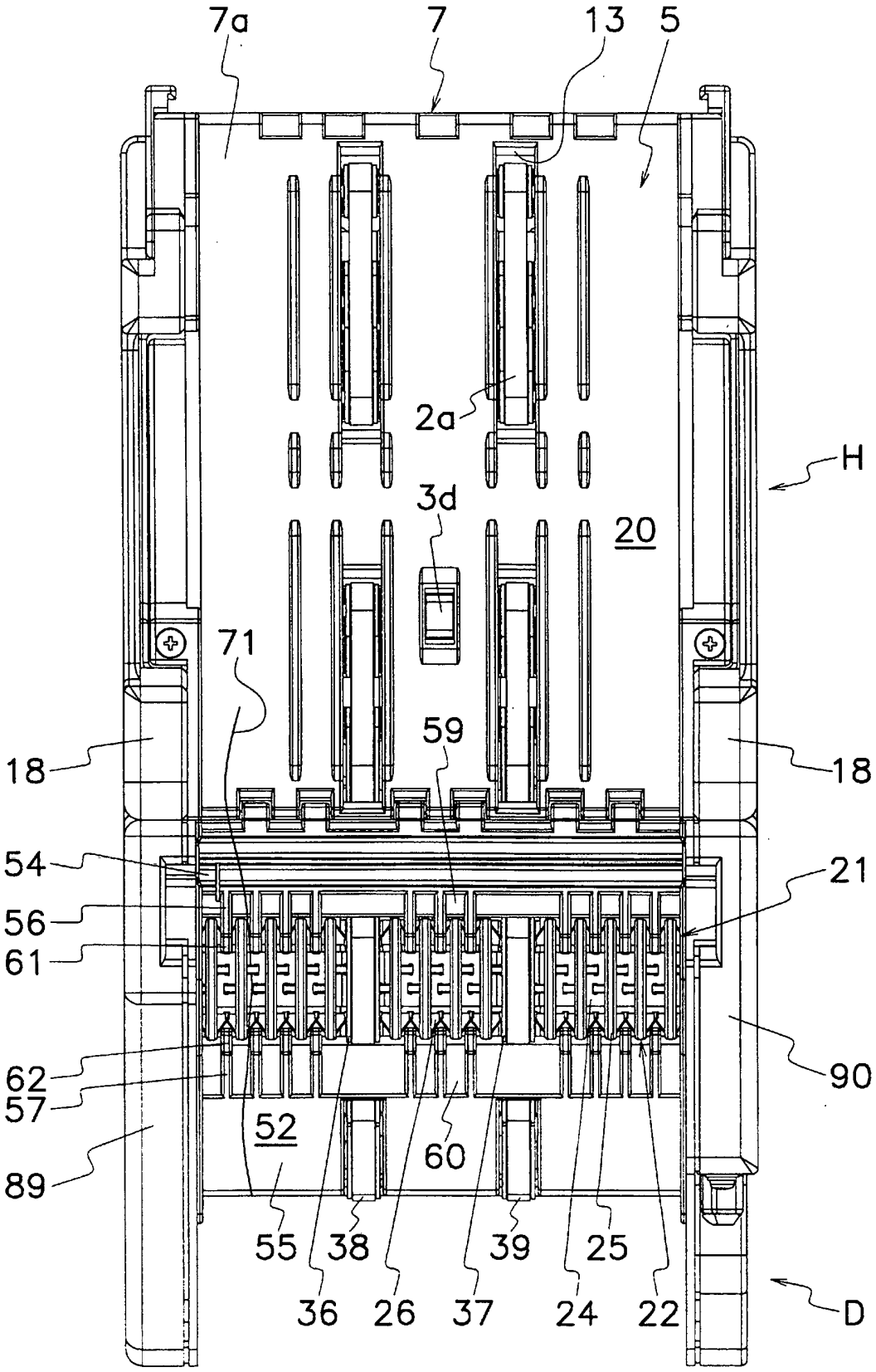
7a
7
13
5
2a
H
3d
20
71
59
18
18
54
21
56
61
62
90
57
52
60
89
55
38
39
25
36
26
37
24
22
D

[Fig. 10]

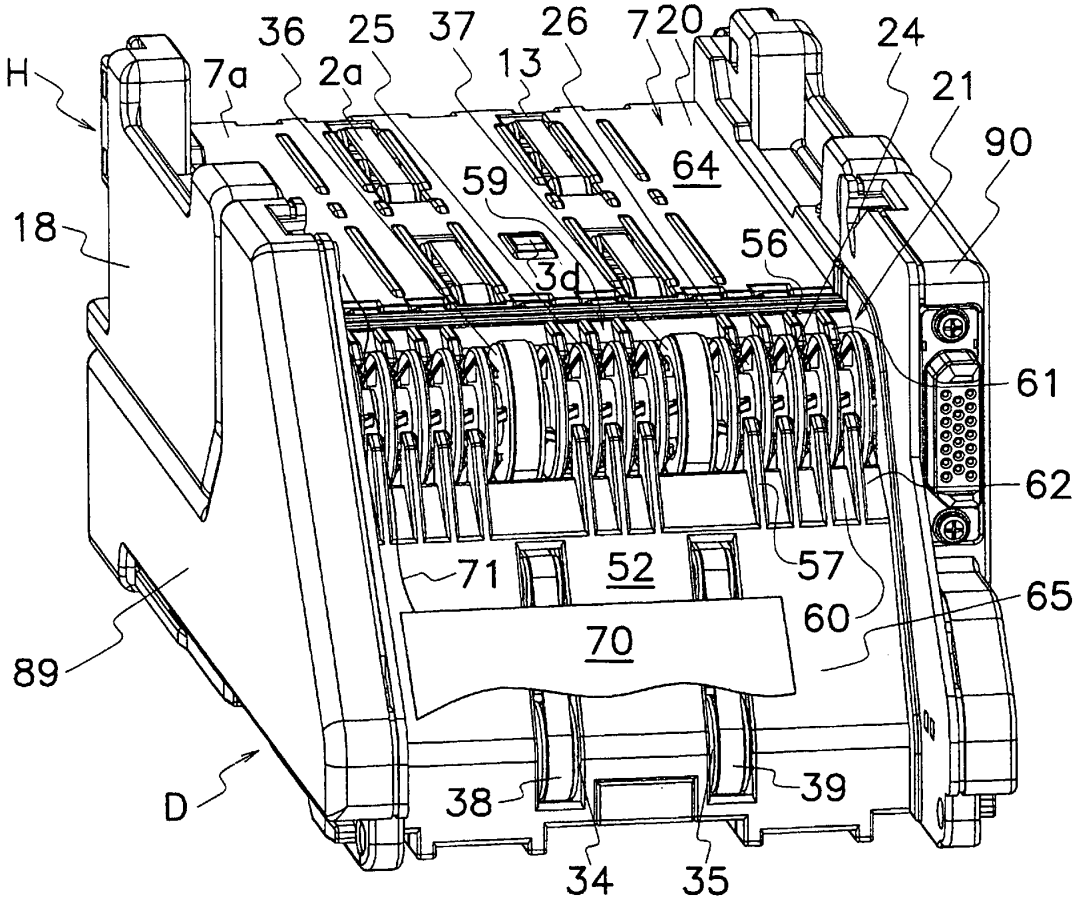
H
36
25
37
26
7
20
24
7a
2a
13
21
90
59
64
18
56
3d
61
62
71
52
57
65
60
70
89
D
38
39
34
35

[Fig. 11]

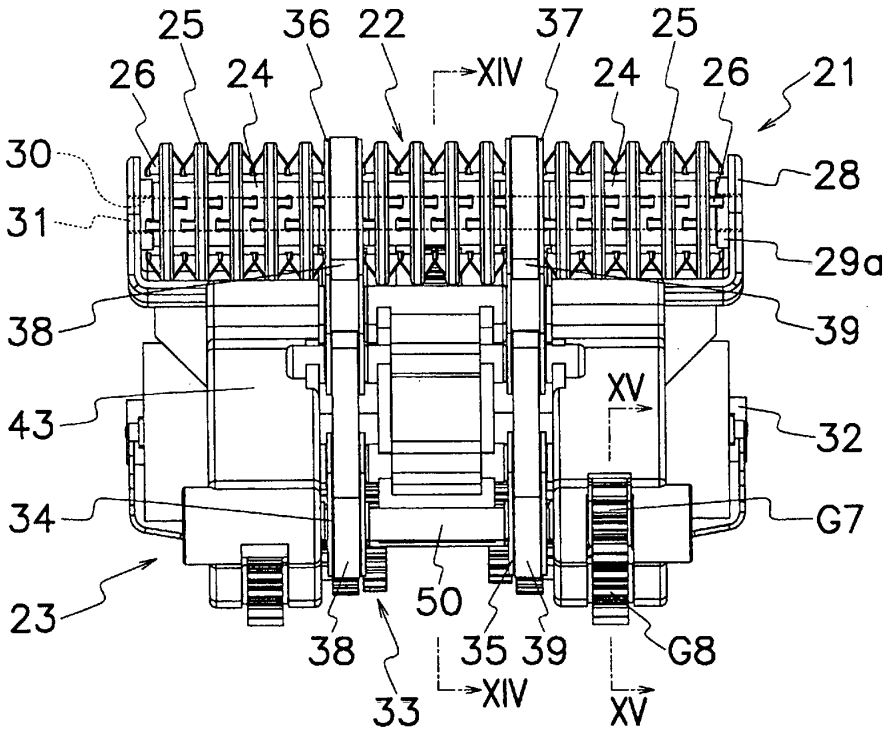
25
36
22
37
25
26
24
XIV
24
26
21
30
28
31
29a
38
39
XV
43
32
34
G7
23
50
38
35
39
G8
33
XIV
XV

[Fig. 12]

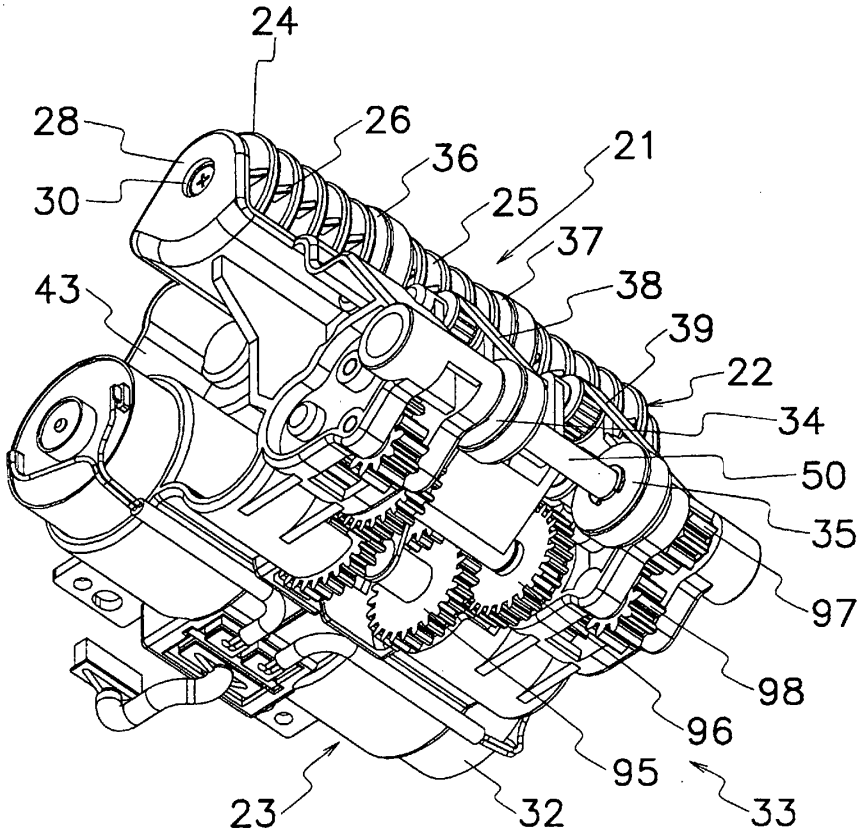
24
28
26
36
21
30
25
37
43
38
39
22
34
50
35
97
98
96
95
23
32
33

[Fig. 13]

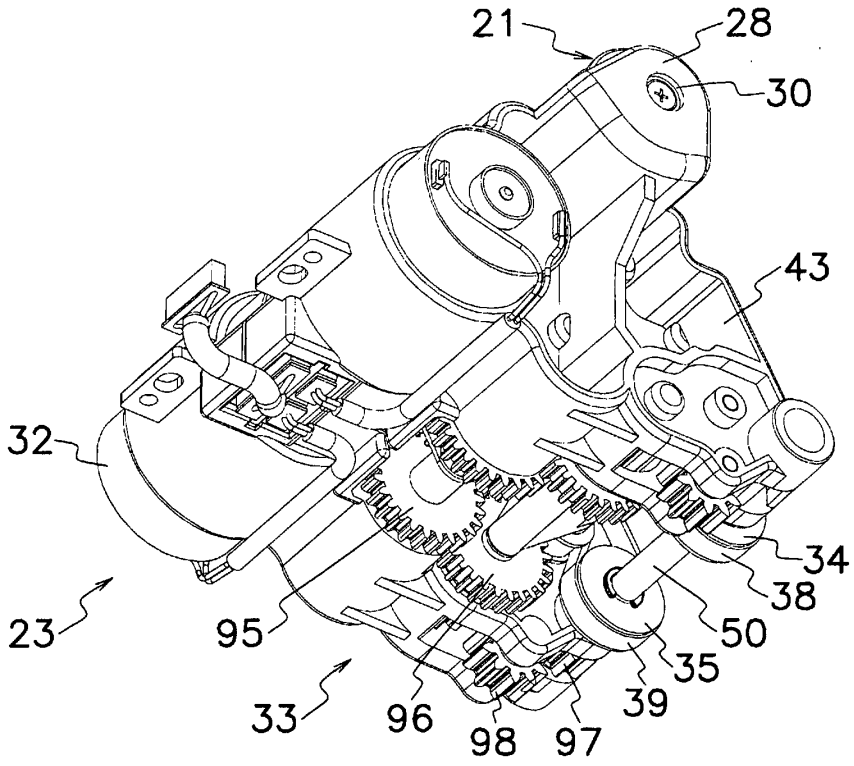
21
28
30
43
32
34
38
23
95
50
35
33
96
39
98
97

[Fig. 14]

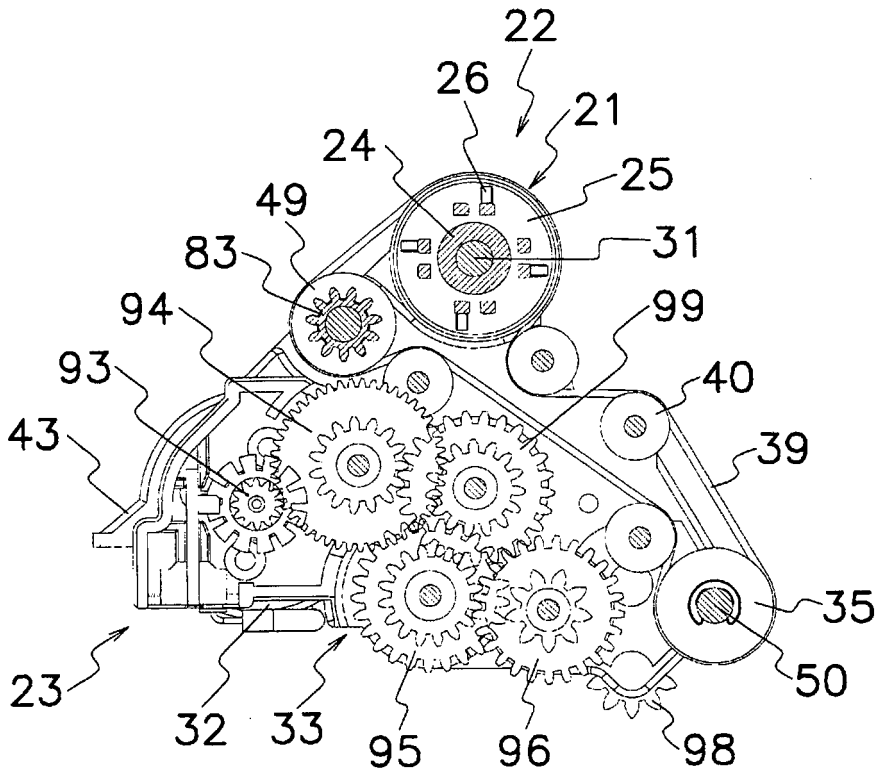
22
26
21
24
25
49
31
83
94
99
93
40
43
39
35
50
23
32
33
95
96
98

[Fig. 15]

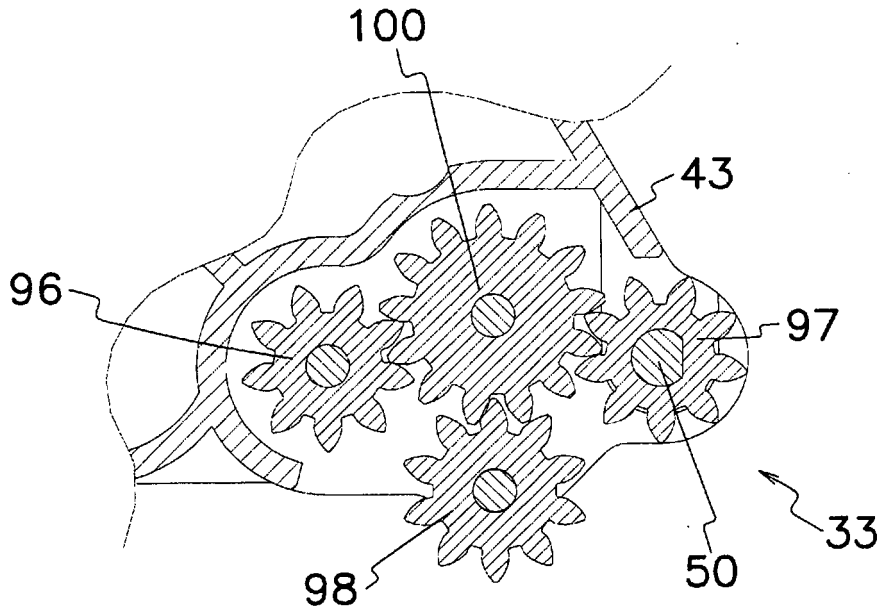
100
43
96
97
33
98
50

[Fig. 16]

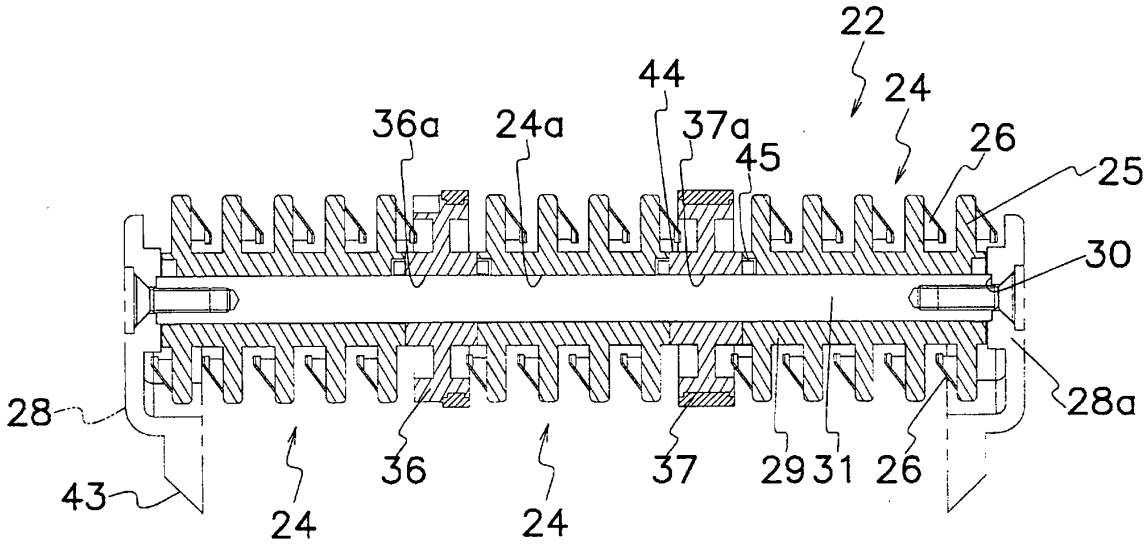
22
44
24
36a
24a
37a
45
26
25
30
28
28a
43
36
37
29
31
26
24
24

[Fig. 17]

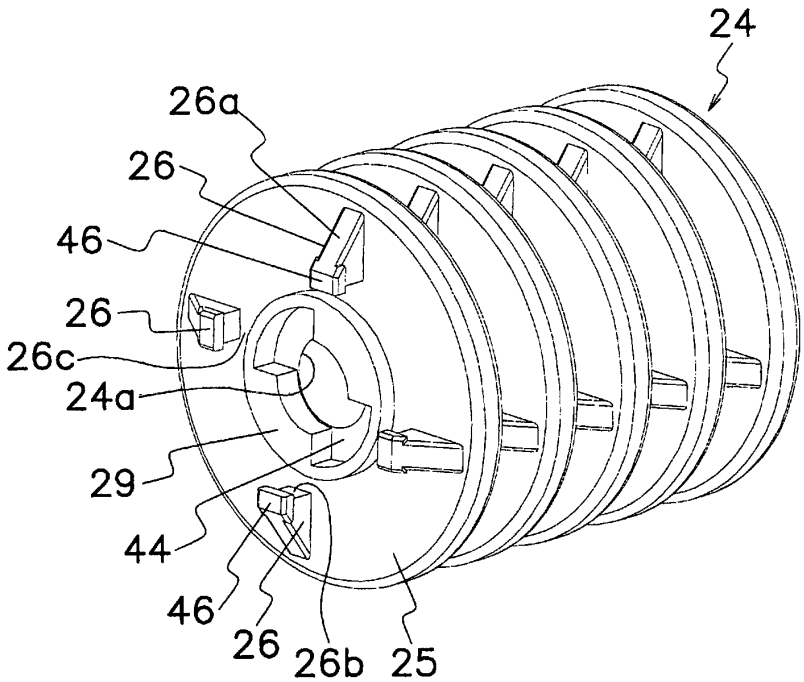
24
26a
26
46
26
26c
24a
29
44
46
26
26b
25

[Fig. 18]

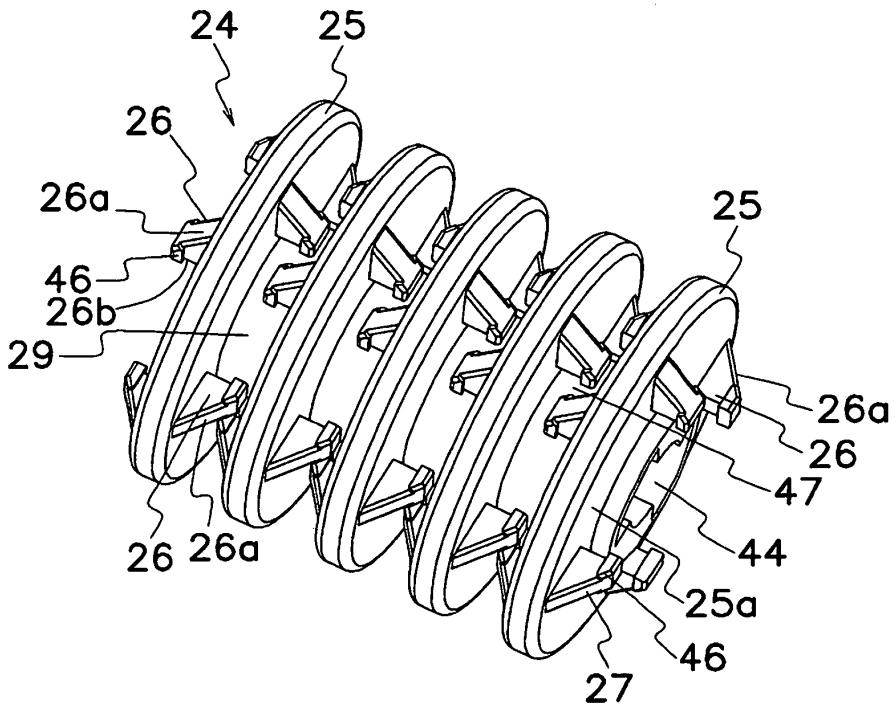
24
25
26
26a
46
26b
29
25
26a
26
47
44
25a
46
27
26
26a

[Fig. 19]

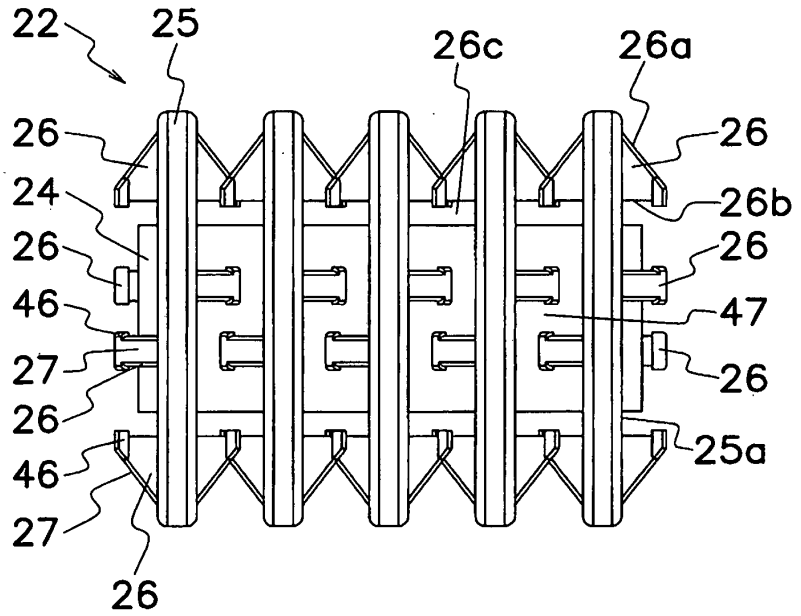
22
25
26c
26a
26
24
26
46
27
26
46
27
26
26
26b
26
47
26
25a

[Fig. 20]

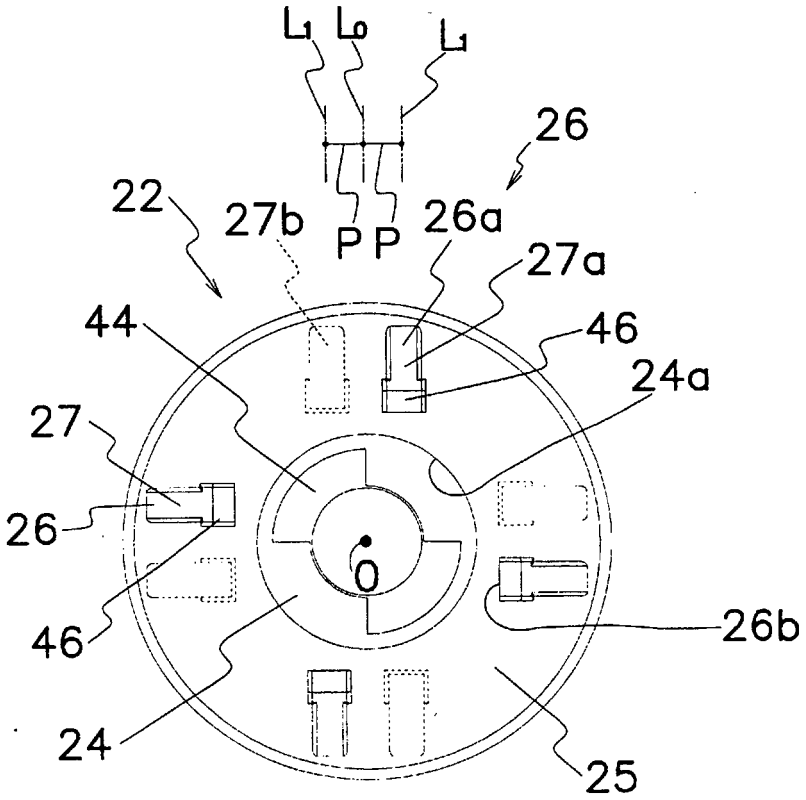
L1 L0 L1
26
22
27b
P P
26a
27a
44
46
24a
27
26
O
46
26b
24
25

[Fig. 21]

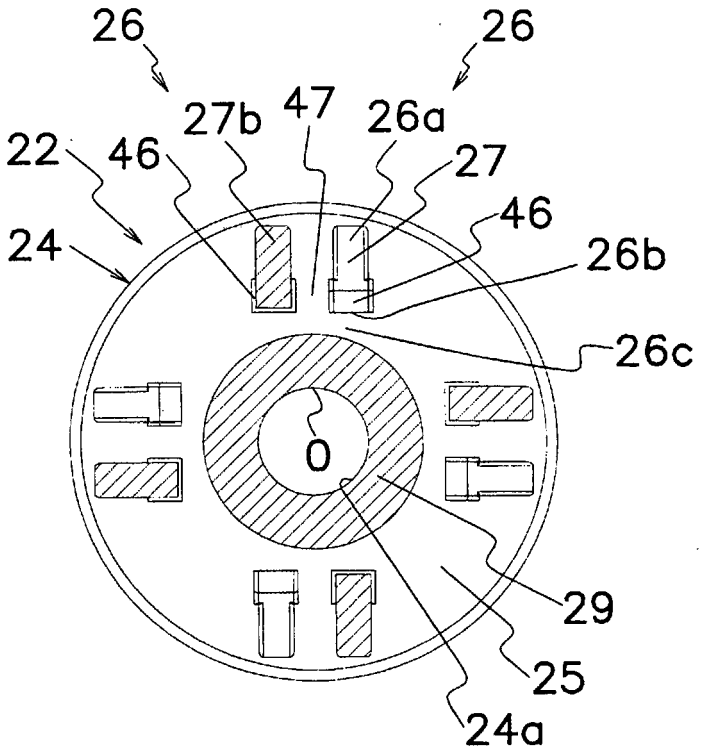
26
26
27b
47
26a
22
46
27
24
46
26b
26c
O
29
25
24a

[Fig. 22]

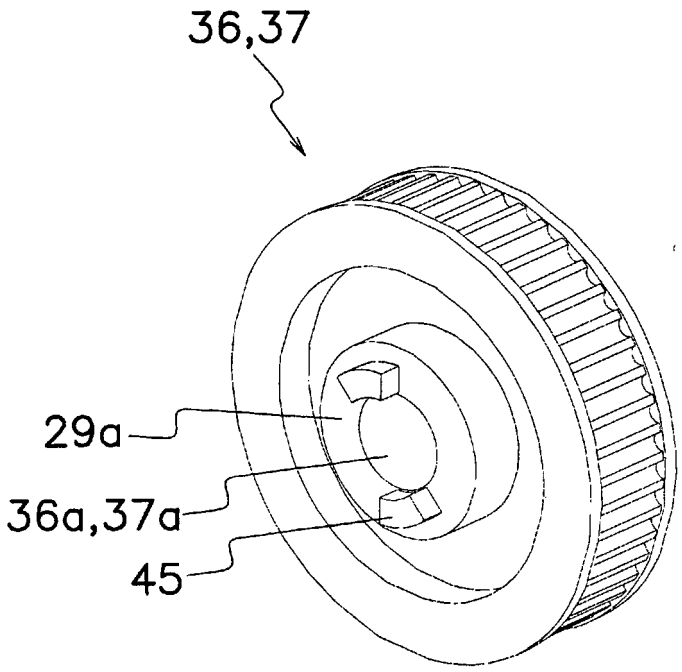

[Fig. 23]

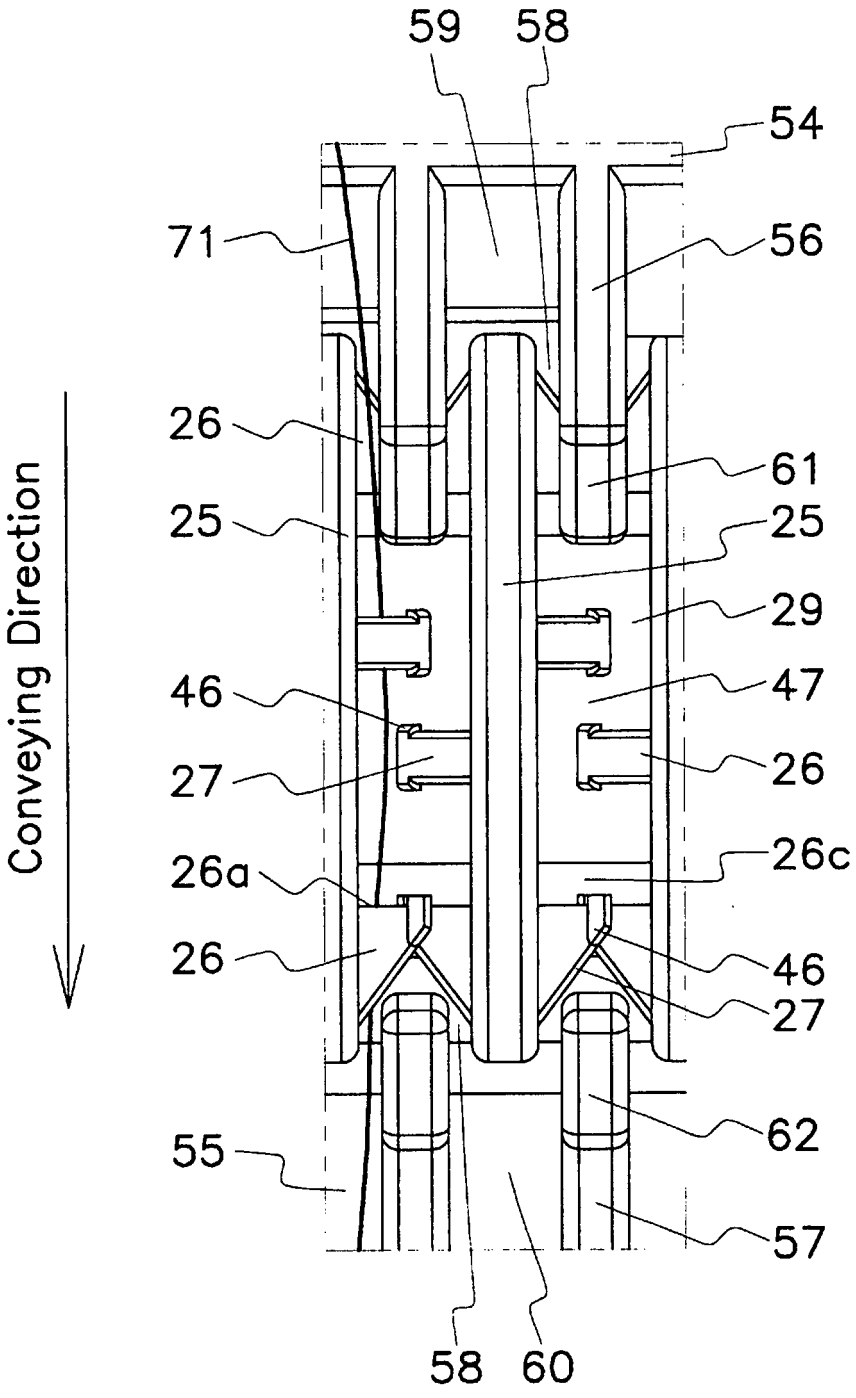
59
58
54
71
56
26
61
25
25
29
46
47
27
26
26a
26c
26
46
27
62
55
57
58
60
Conveying Direction

[Fig. 24]

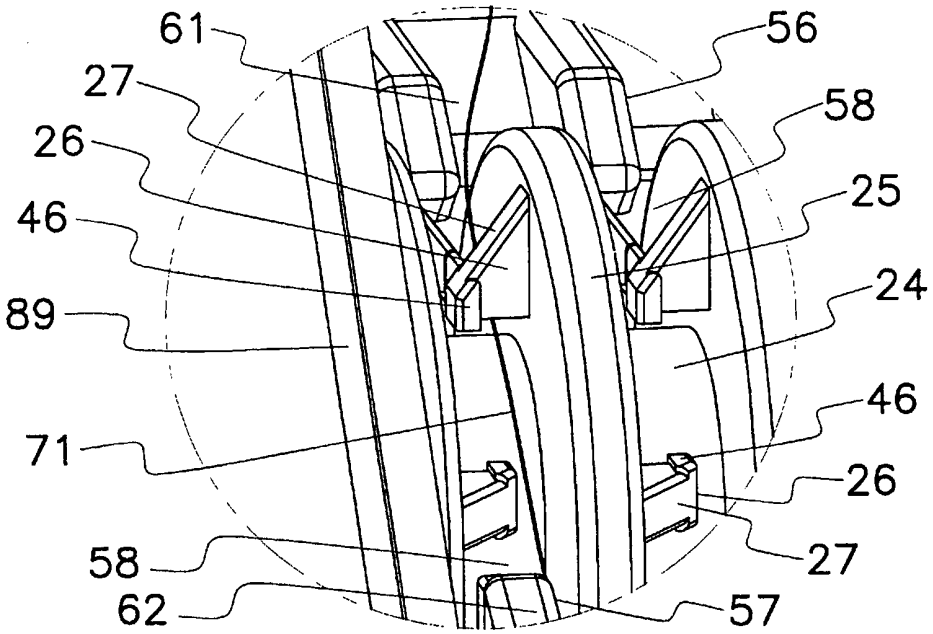


[Fig. 25]

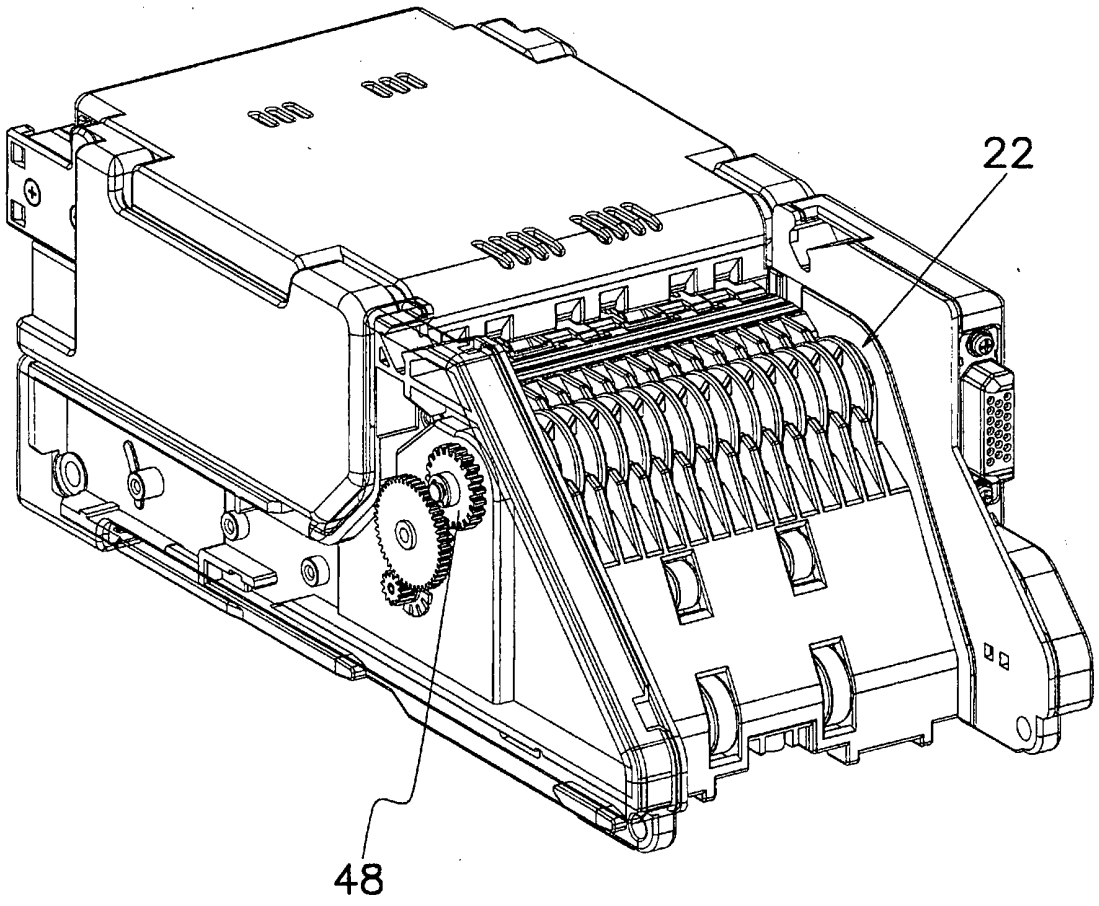

[Fig. 26]

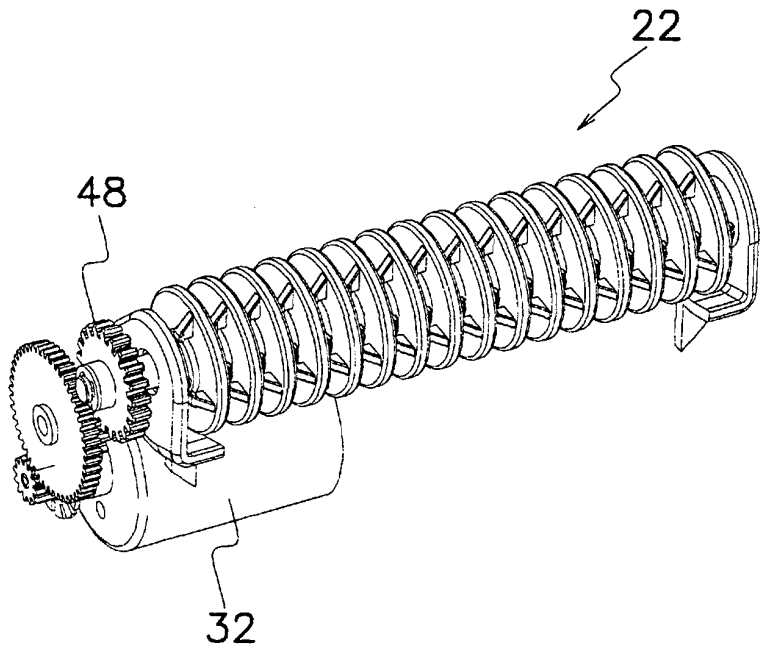


[Fig. 27]

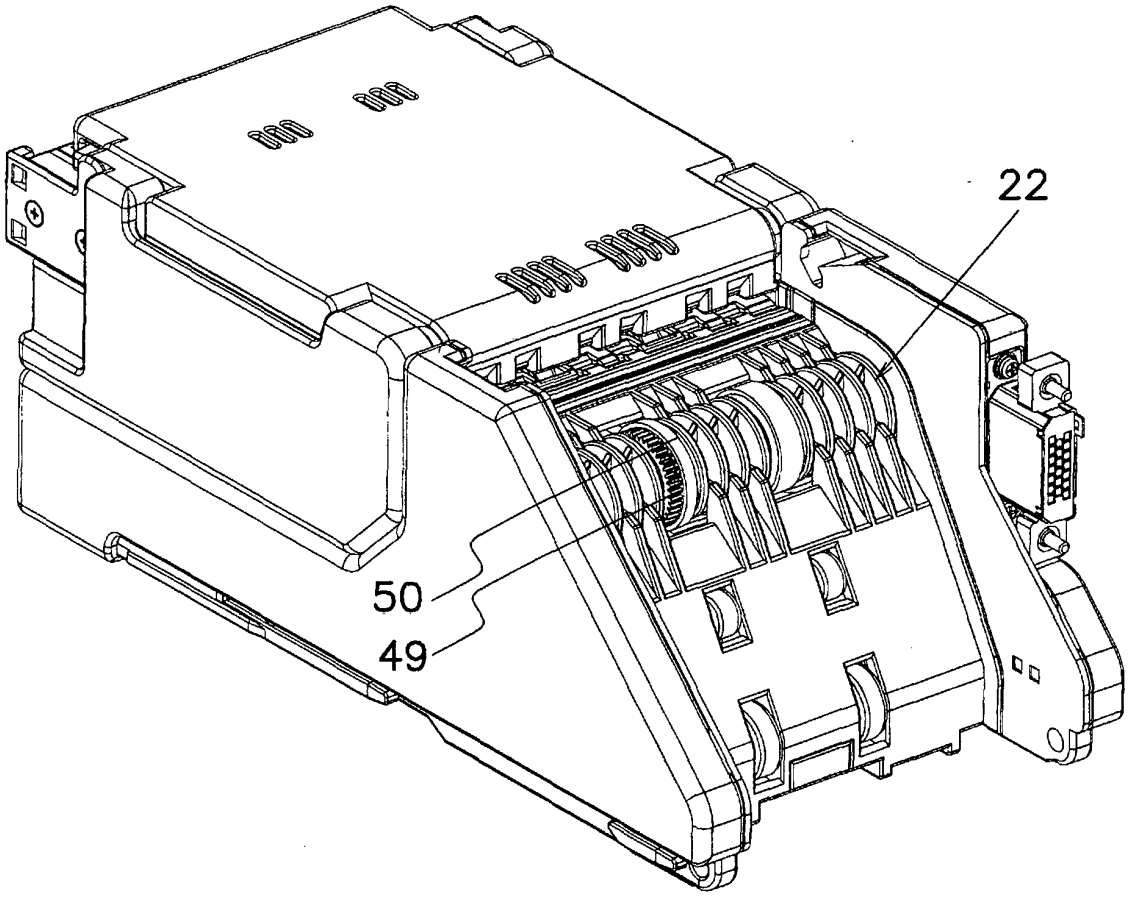

[Fig. 28]

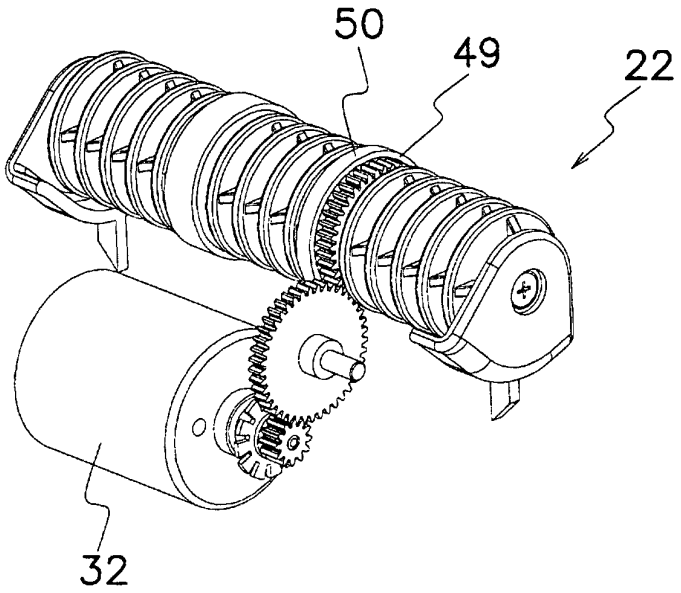


[Fig. 29]

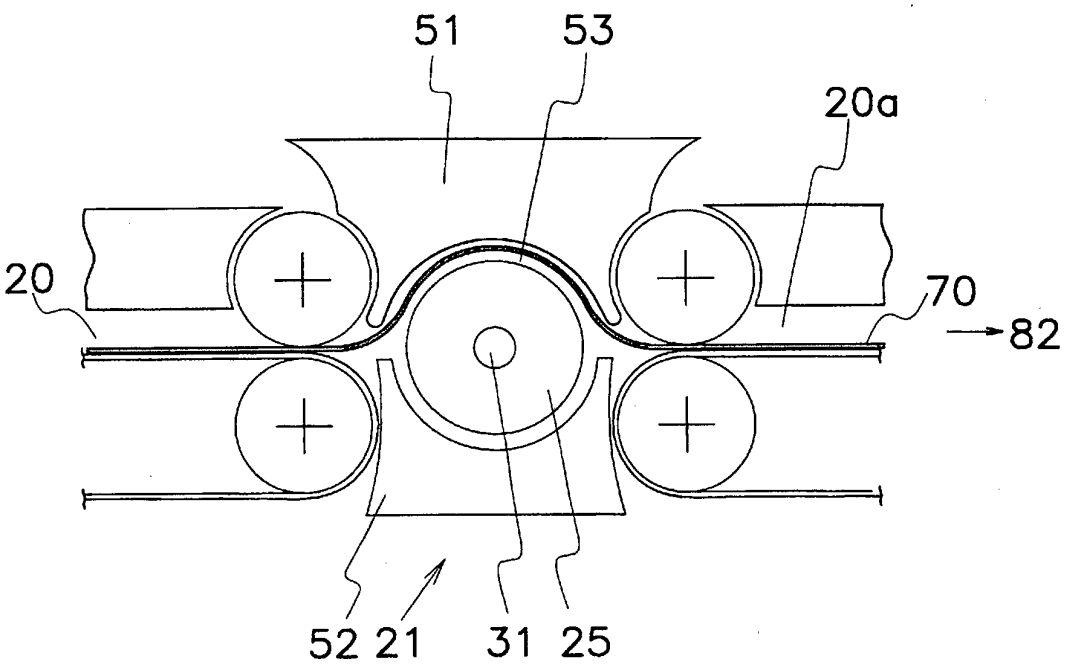

## REFERENCES CITED IN THE DESCRIPTION

*This list of references cited by the applicant is for the reader's convenience only. It does not form part of the European patent document. Even though great care has been taken in compiling the references, errors or omissions cannot be excluded and the EPO disclaims all liability in this regard.*

### Patent documents cited in the description


- US 2006284410 A1 **[0003]**
- US 6932208 B1 **[0005]**
- US 4504022 A **[0006]**
- EP 0627107 A1 **[0007]**
- EP 1850294 A1 **[0008]**
- JP 2004070647 A **[0009]**
- JP 8279065 A **[0010]**
- JP 2006195595 A **[0011]**
- JP 2005247497 A **[0012]**