June 7, 1938. L. E. KNERR 2,119,547

LIFTING BEAM MECHANISM

Filed July 23, 1937 3 Sheets-Sheet 1

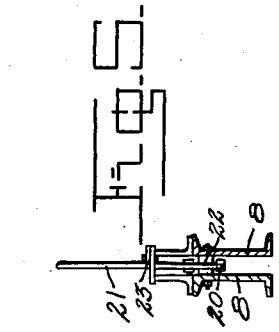

FIG. 5

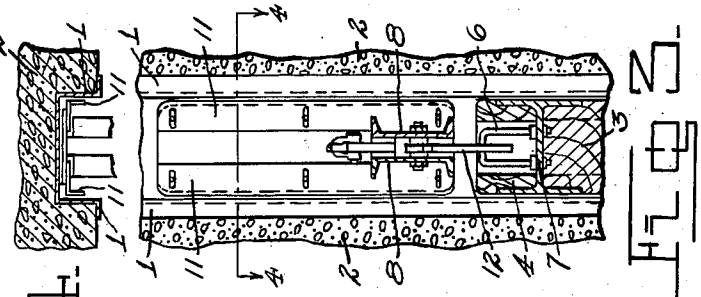

FIG. 3

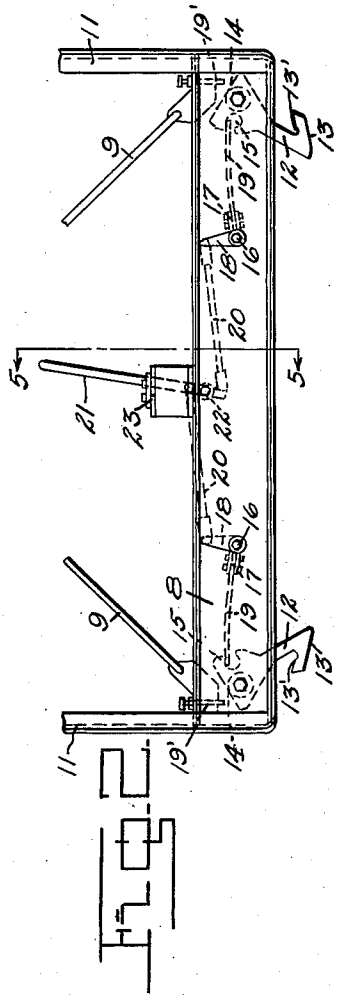

FIG. 2

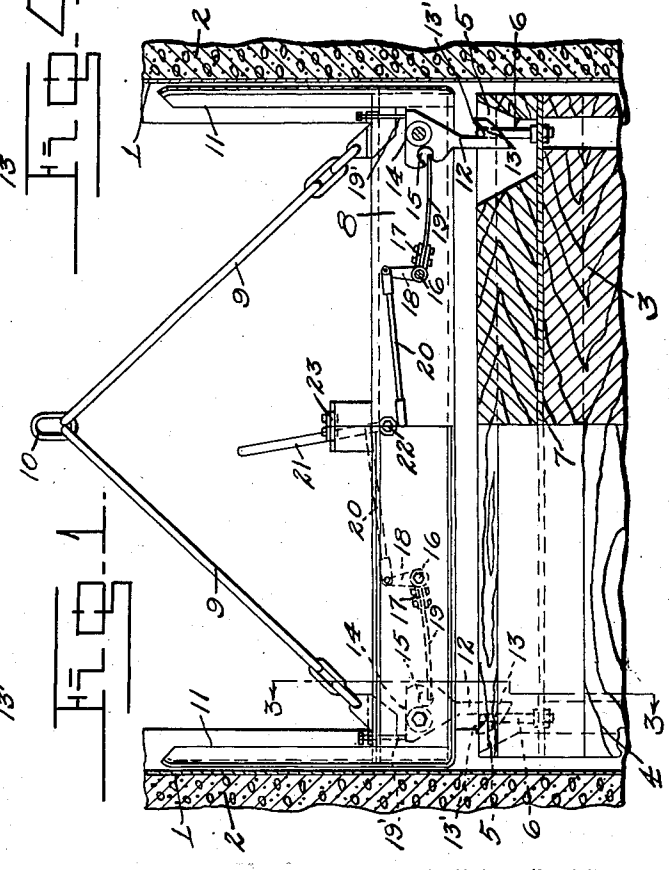

FIG. 4

FIG. 1

INVENTOR

Lewis E. Knerr

BY Adams Rockwood

ATTORNEY

June 7, 1938. L. E. KNERR 2,119,547

LIFTING BEAM MECHANISM

Filed July 23, 1937 3 Sheets-Sheet 2

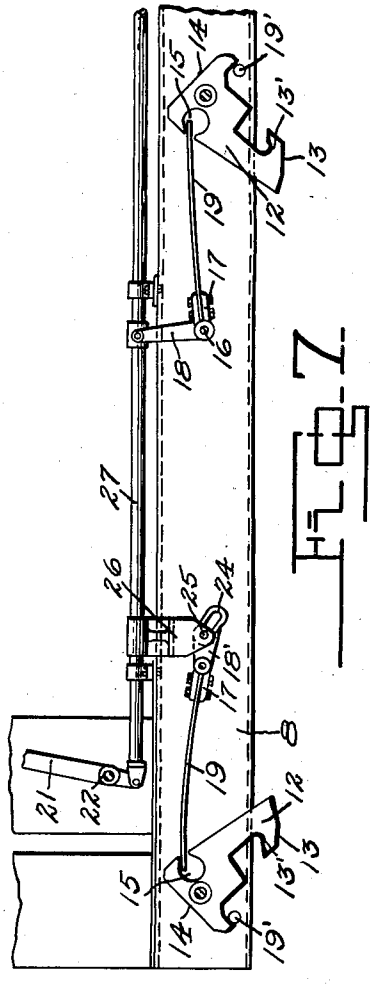

FIG. 7

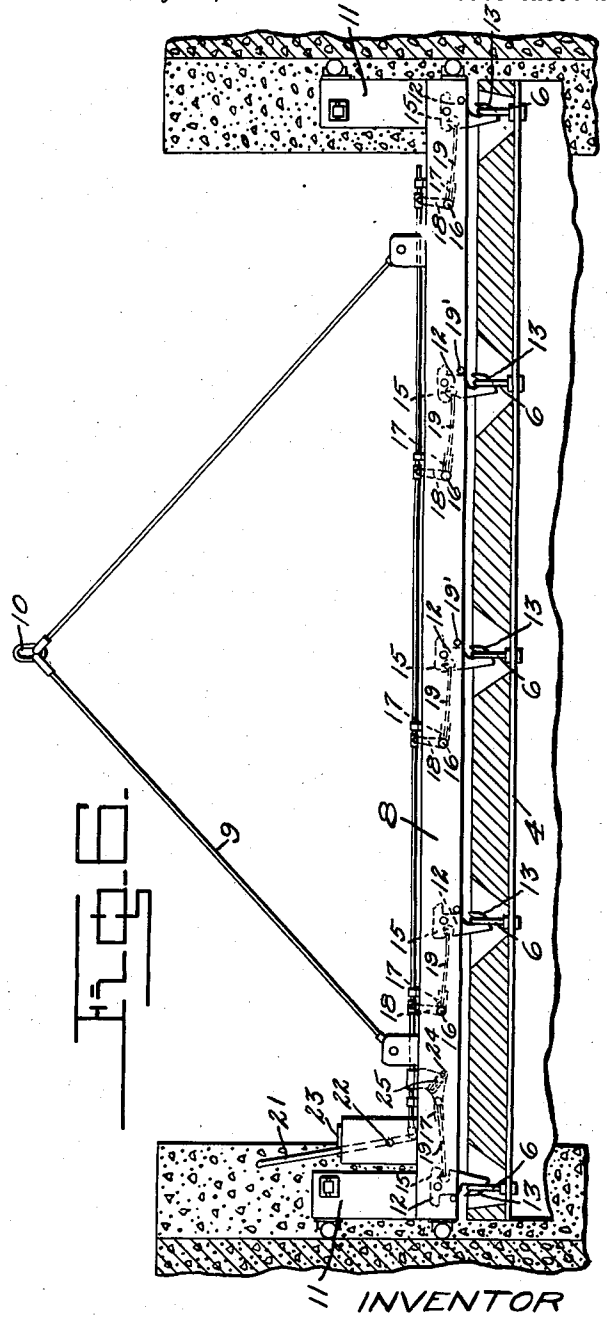

FIG. 6

INVENTOR

Lewis E. Knerr

BY Adam Richmond

ATTORNEY

June 7, 1938. L. E. KNERR 2,119,547

LIFTING BEAM MECHANISM

Filed July 23, 1937 3 Sheets-Sheet 3

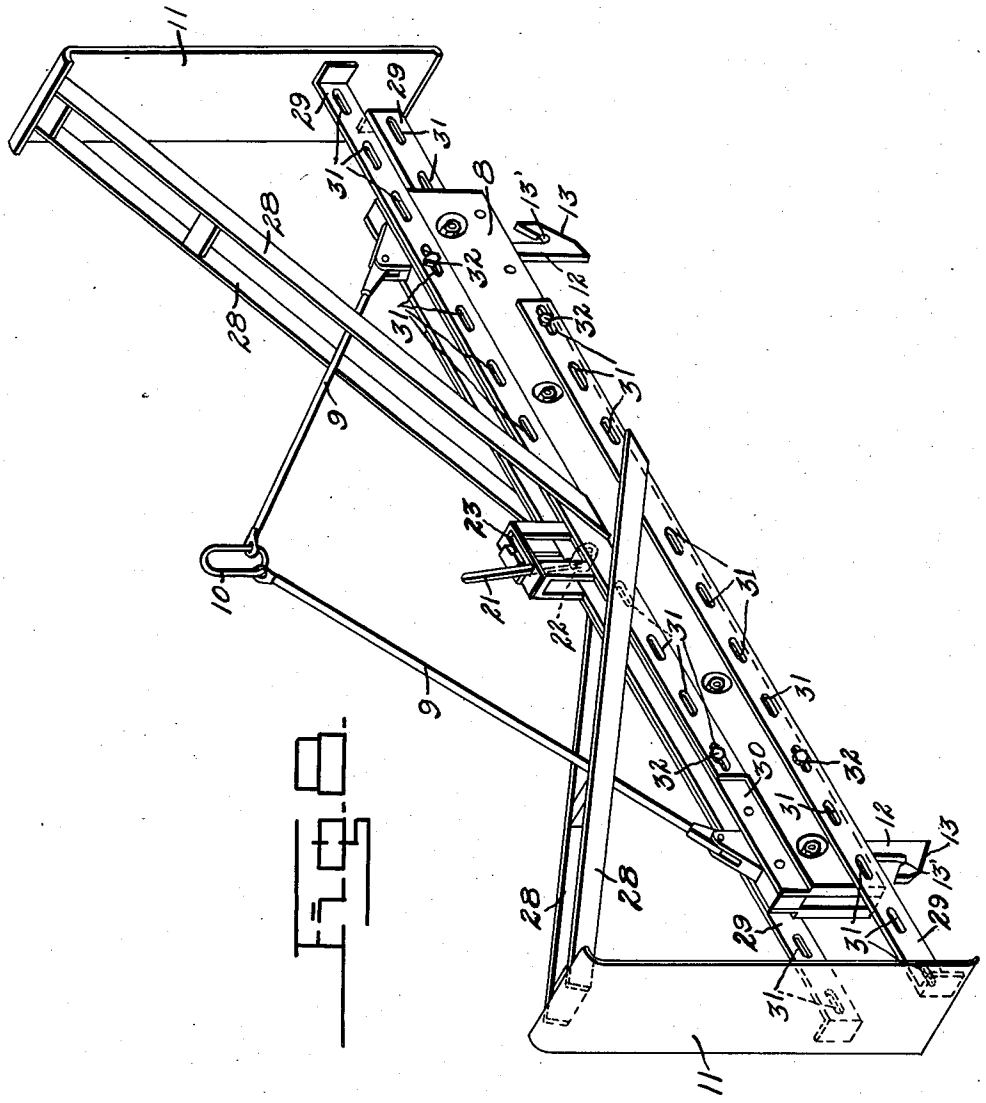

INVENTOR
Lewis E Knerr
BY
Adams Richmond
ATTORNEY

Patented June 7, 1938 2,119,547

UNITED STATES PATENT OFFICE

2,119,547

LIFTING BEAM MECHANISM

Lewis E. Knerr, Portland, Oreg., assignor to United States of America, as represented by the Secretary of War

Application July 23, 1937, Serial No. 155,288

5 Claims. (Cl. 61—28)

(Granted under the act of March 3, 1883, as amended April 30, 1928; 370 O. G. 757)

This invention described herein may be manufactured and used by or for the Government for governmental purposes, without the payment to me of any royalty thereon.

This invention generically relates to segmental barriers or gates which are adapted to be used in connection with dam constructions and fishways of the type described and claimed in the applications entitled respectively, "Method and apparatus for transferring migratory fish over a dam structure" and "Fish ladder assembly", filed respectively June 2, 1937 and May 25, 1937, by Harlan B. Holmes et al. and Ben L. Peterson, serially numbered respectively 146,016 and 144,611; more especially this invention is directed to a lifting beam mechanism by means of which the segments of a segmental barrier may be quickly and expeditiously placed in or removed from a barrier guideway.

One object of this invention is to provide a lifting beam of the character specified which may be lowered into the guideway of a segmental barrier, automatically coupled to a barrier segment and then elevated with its load to remove the segment from the guideway or which may be loaded with a segment, lowered into the guideway until the segment comes to rest either on another segment or at the bottom of the guideway, whereupon lifting beam and segment are automatically uncoupled.

Another object of this invention is to provide a lifting beam adapted to operate in the guideway of a segmental barrier and equipped with coupling members designed to coact with complemental coupling members carried by each of the segments of the barrier, the coupling members of the lifting beam being tensioned by a manual set mechanism so as to engage or disengage the coupling members of the segments depending upon the setting of said manual controlled means.

Another object of this invention is to provide a lifting beam operable in the guideway of a segmental barrier adapted to be automatically engaged or disengaged with respect to the coupling members carried by the segments of the barrier and having extensible shoes to permit the use of the barrier in guideways of different widths.

With these and other objects in view, this invention consists in certain novel details of construction, combination and arrangement of parts to be more particularly hereinafter described and claimed.

Briefly stated, this invention comprises a guideway, a segmental barrier arranged in the guideway and composed of a series of superimposed segments slidable in the guideway; a lifting beam suitably suspended and adapted to operate in the guideway, the beam being provided at its extremities with coupling members adapted to automatically engage and disengage a pair of complemental coupling members suitably associated with each barrier segment, and a manually controlled mechanism coacting with the beam-carried coupling members and functioning to tension said members in a manner which will automatically effect their engagement or disengagement with respect to the coupling members associated with the segments.

Referring more particularly to the accompanying drawings in which corresponding parts are indicated by similar reference characters:

Fig. 1 is a fragmentary vertical section partially in elevation and illustrating part of a guideway, a portion of a segmental barrier in the guideway, a lifting beam also in the guideway, the lifting beam being shown with its coupling hooks in engagement with the coupling members of a barrier segment;

Fig. 2 is a fragmentary longitudinal section partially in elevation and illustrating a lifting beam, the manually controlled tensioning mechanism for the coupling hooks, and showing said mechanism set to dispose said coupling hooks in released position;

Fig. 3 is a transverse vertical section taken on the line 3—3 of Fig. 1;

Fig. 4 is a similar view taken on the line 4—4 of Fig. 3;

Fig. 5 is a similar view taken on the line 5—5 of Fig. 2;

Fig. 6 is a fragmentary vertical section partly in elevation and illustrating a modified form of lifting beam and barrier segment, equipped with a series of coupling members;

Fig. 7 is a fragmentary detail of the lifting beam shown in Fig. 6, and illustrating the modified form of mechanism for operating a beam carried by the coupling hooks; and

Fig. 8 is a perspective view of a further modification illustrating a lifting beam provided with extensible shoes so that the beam may be employed in guideways of different widths.

In the embodiment of this invention, disclosed in Figs. 1 to 5 inclusive, there is shown a part of a guideway formed by a pair of vertically disposed laterally spaced channel-members (1), which are embedded in a suitable foundation (2). Within the guideway is disposed a seg-

mental barrier (3), composed of a plurality of superimposed segments (4), adapted to be slidably operated in channel-member (1). Each segment adjacent its extremities is formed with recesses (5), having a coupling bail (6) which is suitably bolted to bed plate (7), as clearly shown in Figs. 1 and 3 of the drawings.

The lifting beam (8) is supported by bridle (9) which extends from a ring (10) attached to, and adapted to be operated by a hoisting mechanism (not shown). Beam (8) is provided at its extremities with laterally extensible guide shoes (11), adapted to slide within channel-members (1), as clearly shown in Figs. 3 and 4 of the drawings. Pivotally mounted adjacent each end of and extending below the lifting beam is a coupling hook (12), formed at its lower end with a cam portion (13) and a throat-like portion (13'). At its upper end hook (12) is provided with a heel portion (14), the latter having therein an open eyelet (15), as clearly shown in Figs. 1 and 2 of the drawings.

To cause coupling hooks (12) to automatically engage and release coupling bails (6), the lifting beam (8) is provided with a manually controlled tensioning mechanism which comprises: a pair of suitably mounted rock shafts (16) having rocker arms (17) and (18), each of the rocker arms (17) carries a leaf spring (19), the free end of which projects into the open eyelet (15) formed in the heel of each of the coupling hooks (12), as clearly shown in Figs. 1 and 2 of the drawings. Each of the rocker arms (18) is connected to one end of a connecting rod (20), and the free ends of these rods are connected with an operating lever (21), pivotally mounted on shaft (22), as shown in Figs. 1 and 2 of the drawings.

According to this construction, when operating lever (21) is shifted anti-clockwise, in its slotted guide-plate (23), rocker arms (17) will be actuated so that the pressure of the springs (19), will be exerted on the heels (14) of coupling hooks (12), in a direction to cause said hooks to move about their pivots to the limit provided by stops (19'), as shown in Fig. 1 of the drawings. Clockwise movement of operating lever (21) alters the position of leaf springs (19) and causes their pressure to be exerted in a direction which will tend to rotate the hooks about their pivots to the position shown in Fig. 2 of the drawings.

In Figs. 6 and 7, there is shown a modified form of this invention, to be used in connection with large span segments. In this construction segments (4) are provided with a series of coupling bails (6) adapted to coact with a like series of coupling hooks (12) carried by lifting beam (8). The manually controlled tensioning mechanism for the coupling hooks (12), is substantially the same in this form of the invention, as that described in connection with the lifting beam, shown in Figs. 1 and 2 of the drawings. With this exception, the rocker arm (18'), at one end of the lifting beam, is provided with a slotted extension (24) adapted to coact with cam (25) carried by a connection (26), which with the remaining rocker arms (18) is attached to a common shifting rod (27). Shifting rod (27) is connected to an operating lever (21), hence when the rod (27) is shifted, rocker arms (17) will be actuated to simultaneously alter the direction of pressure applied by leaf springs (19) to heels (14) of coupling hooks (12), as will be understood without further discussion.

In the modification shown in Fig. 8, lifting beam (8) is equipped with extensible shoes (11), each of which is provided with braces (28) suitably connected with extensions (29), the latter extending from the shoes and being adapted to seat in the recesses (30) formed in the beam (8), as clearly shown in Fig. 8 of the drawings. Extensions (29) are provided with suitable openings (31) for the passage of fastenings (32). This construction permits the span of the shoes (11) to be increased or decreased in accordance with that of the guideway in which the beam is adapted to operate, as will be understood without further discussion.

Having described the structural features of this invention, its operation will be seen to be as follows:

Assuming that a segment is to be removed from its guideway; lifting beam (8) is brought to a position just above the upper entrance of the guideway, lever (21) is shifted so that the leaf springs will exert a pressure which will cause the coupling hooks (12) to assume the position shown in Fig. 1. Beam (8) is now lowered into the guideway and as the cam surfaces (13) of coupling hooks (12) contact with the coupling bails in the segment, said hooks will be cammed in a direction to permit their passage over the cross pieces of the bails, whereupon they will snap under said cross pieces and effect a coupling between coupling hooks (12) and bails (6). Lifting beam (8) is now elevated by a hoisting mechanism (not shown) and the segment is removed from the guideway.

In the event it is desired to place a segment either at the bottom of the guideway or on another segment, the coupling hooks (12) of the lifting beam (8) are connected with the bails (6) of the segment to be inserted in the guideway, the beam is then positioned immediately above the entrance of the guideway and just before it is lowered operating lever (21) is actuated so that the pressure of the leaf springs will be exerted upon the coupling hooks (12) as shown in Fig. 2 of the drawings. The coupling hooks (12) cannot now release the bails (6) due to the weight of the segments (4) and the shape of the throat (13'). The beam and its load are now lowered into the guideway until the segments rest at the bottom of the guideway or on another segment.

At this point further lowering of the lifting beam (8) relieves the coupling hooks (12) of the weight of the segment (4) and permits springs (19) to disengage coupling hooks (12) from bails (6) and the lifting beam may then be removed from the guideway.

In conclusion it will be apparent this invention provides a lifting beam mechanism by means of which the segments of a segmental barrier may be quickly lifted from the barrier and deposited at another location or an emergency barrier may be quickly erected wherever it is necessary to close a portal in a dam construction or the entrance to a fishway for cleaning and repairing purposes.

Having described my invention, what I claim as new and wish to secure by Letters Patent is:

1. A lifting beam mechanism comprising a lifting beam adapted to operate in a guideway, a coupling hook pivotally mounted in and extending below the beam, said coupling hook having coupling and uncoupling positions, and a manually controlled device in connection with the beam and coacting with the coupling hook to urge said hook to a coupling or an uncoupling position depending upon the setting of said device, said

manually controlled device including a leaf spring extending into a recess in said hook and means to reverse the direction of pressure exerted by the spring on said hook.

2. A lifting beam mechanism comprising a horizontally suspended lifting beam adapted to operate in a guideway, a coupling hook pivotally mounted in and extending below the beam, said hook having coupling and uncoupling positions, and a manually controlled device in connection with the beam and coacting with the coupling hook to urge said hook to coupling or uncoupling position depending upon the setting of said device, said manually controlled device including a leaf spring extending into a recess in said hook, a rocker arm connected with the spring and means to actuate said rocker arm to reverse the direction of pressure exerted by said spring on said hook.

3. The combination with a guideway, a segmental member slidably positioned within the guideway, said member having a coupling element; of a lifting beam operable in the guideway, a coupling hook pivotally mounted in and extending below the lifting beam, said coupling hook having coupling and uncoupling positions whereby to engage and disengage the coupling element of the segmental member, and a manually controlled device in connection with the lifting beam and coacting with the coupling hook to urge said hook to a coupling or an uncoupling position, depending upon the setting of said device, whereby to automatically couple and uncouple the hook of the lifting beam and the coupling element of the segmental member, when said member and lifting beam are disposed in approximately abutting relation, said device including a rocker arm, a leaf spring carried by the arm, and extending into a recess formed in said hook, and manually controlled means cooperating with the rocker arm to reverse the direction of pressure applied by the spring to said coupling hook.

4. A lifting beam mechanism comprising a longitudinally extensible lifting beam adapted to operate in a guideway, a coupling hook pivotally mounted in and extending below the beam, said coupling hook having coupling and uncoupling positions, and a manually controlled device in connection with the beam and coacting with the coupling hook to urge said hook to a coupling or uncoupling position depending upon the setting of said device, said manually controlled device including a leaf spring extending into a recess in said hook and means to reverse the direction of pressure exerted by said spring on said hook.

5. A lifting mechanism comprising a lifting beam, a laterally adjustable shoe at each end of the beam, the shoes being adapted to operate in a guideway, a coupling hook pivotally mounted in and extending below the beam, said coupling hook having coupling and uncoupling positions, and a manually controlled device in connection with the beam to urge said hook to a coupling or uncoupling position, depending upon the setting of said device, said manually controlled device including a leaf spring extending into a recess in said hook, and means to reverse the direction of pressure exerted by the spring on said hook.

LEWIS E. KNERR.