No. 729,389. PATENTED MAY 26, 1903.

W. J. McCOY.

RAIL JOINT.

APPLICATION FILED NOV. 7, 1902.

NO MODEL.

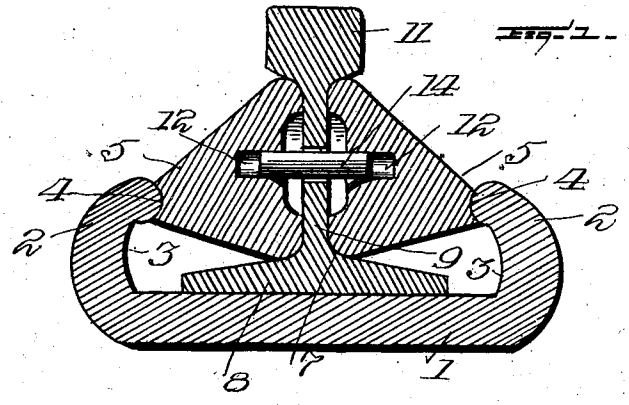

Fig. 1.

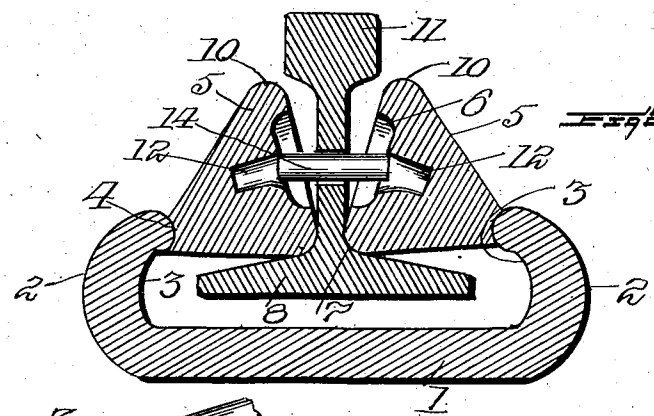

Fig. 2.

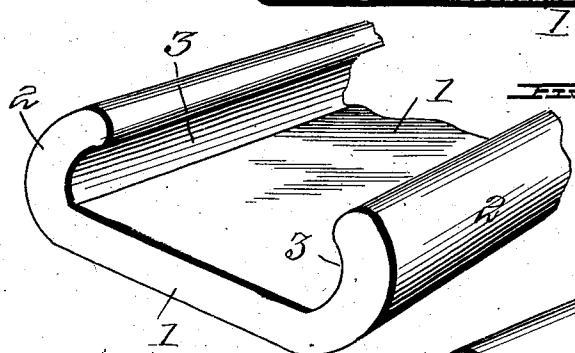

Fig. 3.

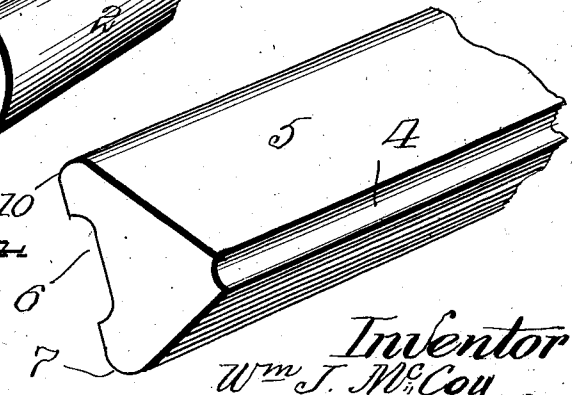

Fig. 4.

Witnesses,
H. H. Busler,
E. E. Potter.

Inventor
Wm. J. McCoy,
By H. C. Ernst & Co.
Attorneys.

THE NORRIS PETERS CO., PHOTO-LITHO., WASHINGTON, D. C.

No. 729,389. Patented May 26, 1903.

UNITED STATES PATENT OFFICE.

WILLIAM J. McCOY, OF McKEES ROCKS, PENNSYLVANIA.

RAIL-JOINT.

SPECIFICATION forming part of Letters Patent No. 729,389, dated May 26, 1903.

Application filed November 7, 1902. Serial No. 130,464. (No model.)

To all whom it may concern:

Be it known that I, WILLIAM J. McCOY, a citizen of the United States of America, residing at McKees Rocks, in the county of Allegheny and State of Pennsylvania, have invented certain new and useful Improvements in Rail-Joints, of which the following is a specification, reference being had therein in the accompanying drawings.

This invention relates to certain new and useful improvements in rail-joints, and has for its object the provision of novel and effective means whereby two adjoining rails may be easily and quickly connected together and a permanent and effective joint made without the aid of the ordinary bolts and nuts.

My invention has for its further object the construction of a rail-joint which may be quickly made and when desired may be easily removed, so as to remove the rail.

Briefly described, my invention comprises a chair-plate which is provided with side flanges which extend upwardly and inwardly and a pair of side or fish plates which in end view or cross-section are substantially triangular in form and are provided with recesses on their inner faces to receive the ends of dowel-pins which project through the apertures in the web of the rail and into the recesses of the opposite fish-plates. These fish-plates are so shaped that one thereof wedges against the inwardly-turned edges of the flanges of the chair, another edge rests upon the base of the rail at the intersection of said base with the web, and the other edge wedges against the underneath face of the rail-tread. All of this construction will be hereinafter more fully described, and specifically pointed out in the claims.

In describing the invention in detail reference is had to the accompanying drawings, forming a part of this specification, and wherein like numerals of reference indicate like parts throughout the several views, in which—

Figure 1 is a transverse vertical sectional view of my improved rail-joint in position. Fig. 2 is a transverse vertical sectional view showing the manner in which the joint is applied, the parts being shown in the position they occupy prior to being forced into the locked position. Fig. 3 is a detail perspective view of a part of the rail-chair, and Fig. 4 is a detail perspective view of a part of one of the wedge-acting fish-plates.

To put my invention into practice, I provide a rail-chair which comprises a base 1, with upwardly-extending side flanges 2, which at their upper edges curve inwardly and have these inwardly-curved edges 3 preferably rounded, so as to fit neatly with the elongated curved seats 4 provided therefor along the outer edge of the wedging fish-plates 5. These wedge-acting fish-plates 5 are substantially triangular in end view or cross-section, and their inner faces may be provided with the grooves or recessed portions 6 to provide for contraction and expansion, and the inner faces may be made flush throughout their surface. The lower edge 7 of these triangular fish-plates is adapted to impinge against the upper face of the rail-base 8 and the lower edge of the web 9, and the upper edge 10 is adapted to wedge against the underneath face of the rail-tread 11. The wedge-acting fish-plates 5 are provided on their inner face with recesses 12, the lower wall of which is inclined, and these recesses receive the projecting ends of the dowel-pins 14, which extend through the apertures provided therefor in the webs of the rails.

To place the joint in position the chair 1 is placed under the ends of the two adjacent rails, and the ends of these rails are elevated slightly and held in the elevated position until the wedge-acting chairs 5 are placed in the position shown in Fig. 2 of the drawings. These chairs may be placed in this position by first placing one chair in its position and inserting the dowel-pins and then placing the other chair in its position at the opposite side of the chair. Pressure is then brought to bear upon the top of the rails at the joint and they are forced down until the base engages the rail-chair, at which time the wedge-acting fish-plates will have been drawn into position, as shown in Fig. 1 of the drawings, by reason

of the edges 7 and the grooved edges 4 being in engagement, respectively, with the rail and with the edges of the chair.

To remove the joint, the rails may be elevated, so as to spread the wedging fish-plates, which may be done in any suitable or desirable manner.

Having fully described my invention, what I claim as new, and desire to secure by Letters Patent, is—

1. In a rail-joint, a rail-chair having upwardly-extending side flanges which are curved inwardly at their upper edges, in combination with wedge-acting fish-plates, the outer edges of which wedge against the inwardly-curved edges of the side flanges, and dowel-pins loosely fitting in the fish-plates and extending through the web of the rails, substantially as described.

2. In a rail-joint, the rail-chair having upwardly-extending side flanges curved inwardly at their upper edges, in combination with fish-plates having their outer edges seated against the inwardly-curved edges of the side flanges and their inner faces embracing the web of the rail, and dowel-pins loosely fitting in recesses in the fish-plates and extending through the web of the rails, substantially as described.

3. In a rail-joint, the rail-chair having upwardly-extending side flanges provided with inwardly-turned edges, in combination with fish-plates substantially triangular in cross-section, said fish-plates having their outer edges seated against the inwardly-turned edges of the flanges, and their inner faces embracing the web of the rail, and dowel-pins engaging through the rails with their ends engaging in the fish-plates, substantially as described.

In testimony whereof I affix my signature in the presence of two witnesses.

WILLIAM J. McCOY.

Witnesses:
A. M. WILSON,
E. E. POTTER.