J. K. SHIVERS.

RAILROAD CROSSING SIGNAL.

APPLICATION FILED FEB. 27, 1920.

1,431,051.

Patented Oct. 3, 1922

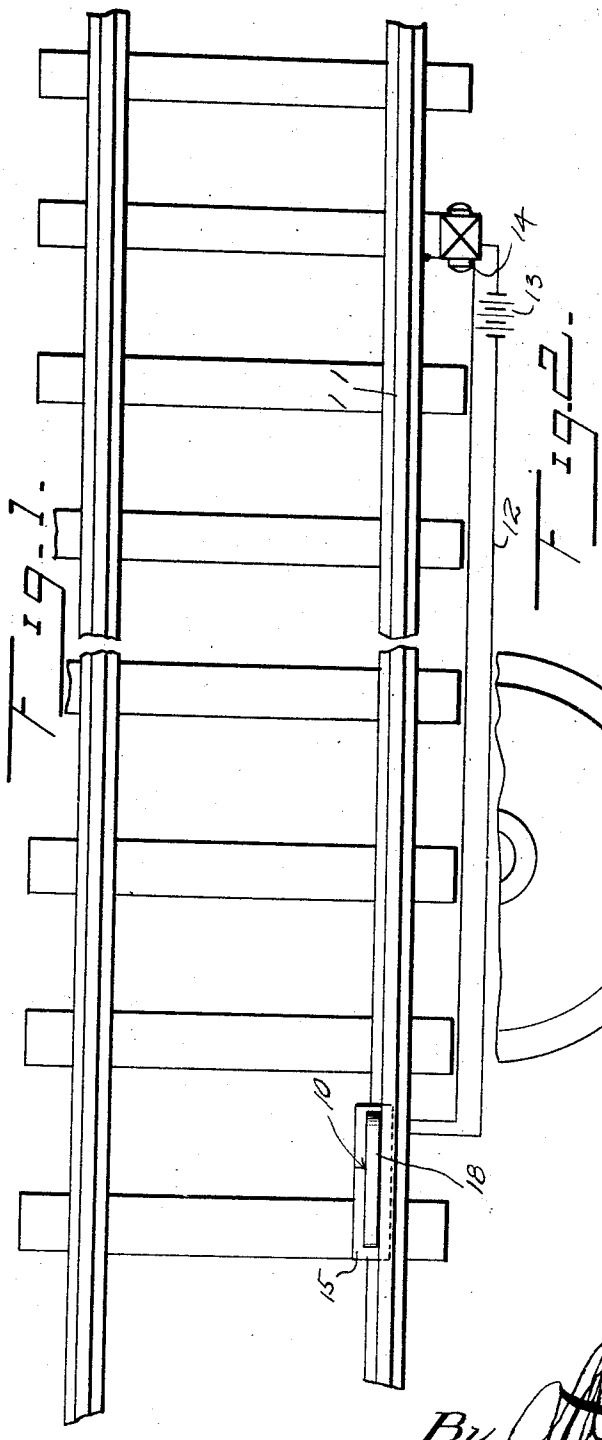

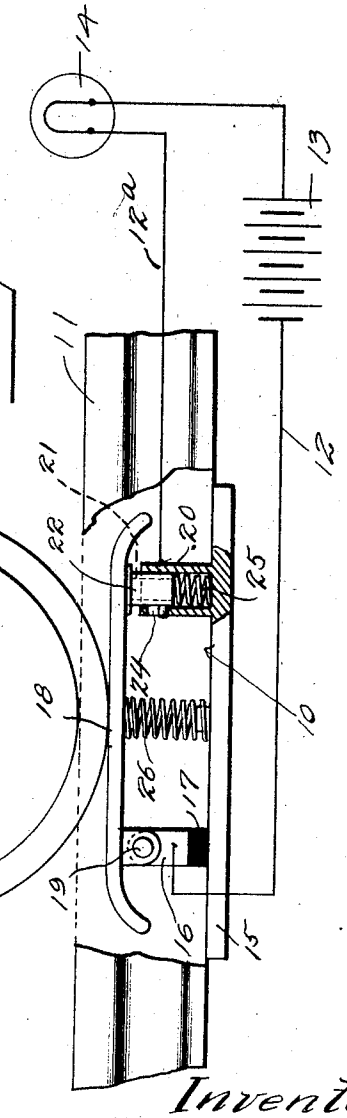

Inventor
J. K. Shivers.

By Randolph & Co. Atty

Patented Oct. 3, 1922.

1,431,051

UNITED STATES PATENT OFFICE.

JOHN K. SHIVERS, OF PHILADELPHIA, PENNSYLVANIA.

RAILROAD-CROSSING SIGNAL.

Application filed February 27, 1920. Serial No. 361,902.

To all whom it may concern:

Be it known that I, JOHN K. SHIVERS, a citizen of the United States, residing at Philadelphia, in the county of Philadelphia and State of Pennsylvania, have invented certain new and useful Improvements in Railroad-Crossing Signals; and I do hereby declare the following to be a full, clear, and exact description of the invention, such as will enable others skilled in the art to which it appertains to make and use the same.

The object of the invention is to provide a simple and efficient means for giving an unmistakable and obtrusively attractive signal at railroad crossings, particularly at night, so that the approach of the track by pedestrians or drivers, when a train is in dangerous proximity to the crossing, may be avoided, and furthermore to provide a means for this purpose which may be installed without the use of expensive equipment and in many instances by utilizing the signal circuits which are now in common use on most of the more important railroads, and with these objects in view the invention consists in a construction and combination of parts of which a typical embodiment is shown in the accompanying drawing, wherein:

Figure 1 is a plan view of the system.

Figure 2 is a detail view of a suitable switch which may be used in substantial form either with a closed or open signalling circuit.

Essentially the system consists in the use of a vibratory or make-and-break switch 10 which may be arranged in a position adjacent to a rail of the track at 11, in the paths of the flanges of the wheels of a passing train and adapted to be actuated respectively and successively by said wheels traversing the track rail to either open or close a circuit, according to whether the apparatus is equipped to operate on a closed or open circuit, through a conductor 12 which preferably includes a battery 13 or other source of energy and a signal light 14 which of course may be multiplied or modified in any well known manner to suit the conditions and location of the proposed signal and the intensity of the light beam which may be required in that connection.

If for example the system is being operated on a normally closed circuit, the vibration of the switch tongue by the contact of the wheels of a passing train therewith will successively break the circuit and thus extinguish the light which under normal conditions burns continuously, and obviously the flashing or flickering of the light will serve to aggressively attract the attention of a pedestrian or driver approaching the tracks on a path or road intersecting the tracks, so that precaution may be taken in time to avoid a collision or accident.

In this instance switch 10 may have a base 15 from which a post 16 rises, being insulated therefrom at 17, and to which post 16, a switch arm or tread 18, to be directly engaged by the car wheel is pivoted at 19. Integral with the base is a tube or sleeve 20 which receives in its upper end, a stud depending from the arm 18. One conductor from the battery 13, as at 12^a leads to sleeve 20. This stud may comprise a conducting post 21 which is surrounded by a sleeve 22 of insulation and through and beyond which a pin or contact 23 from post 21 projects. Contact 23 extends into a slot 24 in tube 20. The circuit is normally closed by the engagement of the pin or contact 23 at the upper end of slot 24, and the parts are urged to this position by springs 25 and 26. As the wheel of the car travels on arm 18, it depresses the latter, disengaging the contact and upper wall of slot 24, thus extinguishing lamp 14 and moving contact 23 into engagement with the slot wall at the base and again lighting lamp 14, thus producing a flickering of the light signal. Of course slot 24 is laterally enlarged so that the contact 23 disengages the tube 20 as the arm 18 vibrates and moves the contact 23 from one end of the slot to the other.

Obviously the apparatus however may be operated on the open circuit principle wherein the light is only made visible when the switch is depressed to close or make the circuit, but in this instance also the light will be flashed or will flicker in accordance with the successive operations of the switch member or tongue, so as to attract attention at the crossing.

What is claimed is:

A signal of the class described having electric circuit means including a signal, a sleeve and a depressible arm, said sleeve having an enlarged slot intermediate its ends,

contact means on the arm depending into the sleeve and entering said slot, insulation on the contact means within the sleeve, a spring to urge the arm away from the sleeve, said arm being disposed for successive movements for engagement by the wheels of a train.

In testimony whereof I affix my signature in presence of two witnesses.

JOHN K. SHIVERS.

Witnesses:
JOHN J. CONNELLY, Jr.,
JOSIAH SHIVERS.