Nov. 30, 1937. G. S. GOULD ET AL 2,100,954

GRINDING WHEEL TRUING DEVICE

Filed July 13, 1936

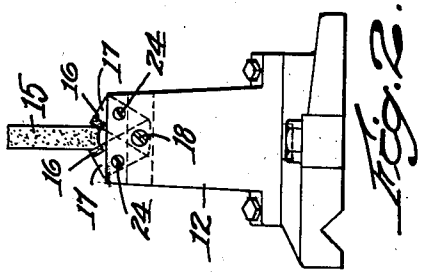

Fig. 2.

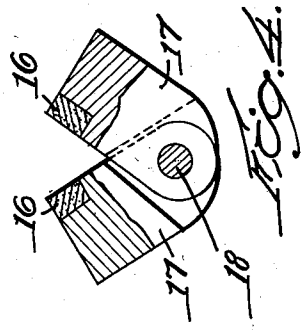

Fig. 4.

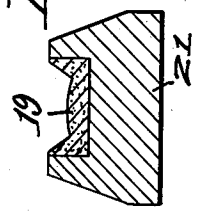

Fig. 5

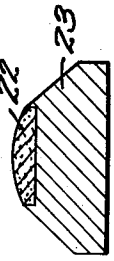

Fig. 6.

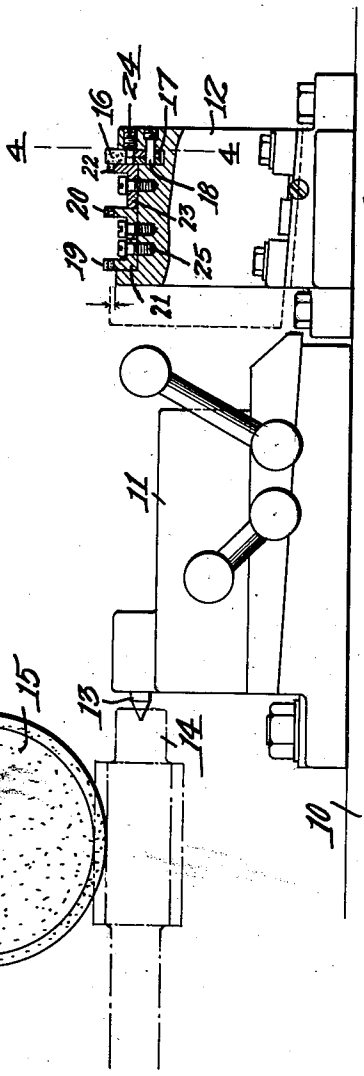

Fig. 1.

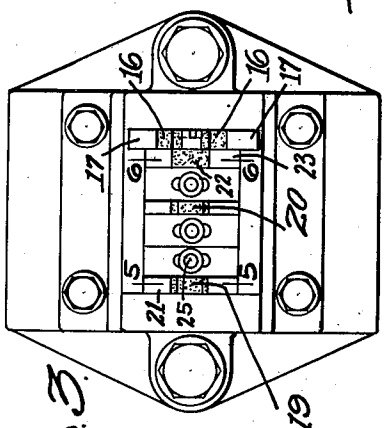

Fig. 3.

Inventors
Gardner S. Gould
Elphege D. LaFleur
By
A. E. Fay
Attorney

Patented Nov. 30, 1937

2,100,954

UNITED STATES PATENT OFFICE

2,100,954

GRINDING WHEEL TRUING DEVICE

Gardner S. Gould, Lunenberg, and Elphege D. La Fleur, Lancaster, Mass., assignors to Fitchburg Grinding Machine Corporation, Fitchburg, Mass., a corporation of Massachusetts

Application July 13, 1936, Serial No. 90,276

8 Claims. (Cl. 125—11)

The principal objects of this invention are to provide a finishing or trimming means mounted on a grinding machine in such position that the grinding wheel can be positioned over and passed through said means without removing the grinding wheel from the machine or manipulating the finishing means in any way; to provide a construction in which the normal position of the inserts that are used for finishing and trimming is such that it coincides with the finished size of the work being ground, whereby any vertical downward movement of the grinding wheel, before the wheel has been trued by this device, will set the machine in such position as to grind the work without further adjustment; to provide a device of this character which constitutes an automatic sizing machine; to provide the inserts for truing the wheel at an adjustable angle; to provide an angular adjustment for the final angle desired in a double shaped form; to provide a construction of such a nature that the wheel to be ground may be formed to the shape desired more rapidly than any machine heretofore designed, and to provide a construction by which many irregular forms may be obtained, and held within the limits required, by one pass of the truing device past the periphery of the grinding wheel.

Other objects and advantages of the invention will appear hereinafter.

Reference is to be had to the accompanying drawing, in which—

Fig. 1 is a side view of a grinding machine provided with a preferred embodiment of this invention and shown in section;

Fig. 2 is an end elevation of the same;

Fig. 3 is a plan;

Fig. 4 is an enlarged sectional view of one of the pair of truing inserts and their supporting means taken on the line 4—4 of Fig. 1, and

Figs. 5 and 6 are sectional views taken respectively on the lines 5—5 and 6—6 of Fig. 3.

On the table 10 on which the foot stock 11 of the grinding machine is mounted is also mounted the base 12 of the truing device so that these two machines are in proper alignment. The foot stock is, of course, provided with a point 13 for receiving the work 14 over which the grinding wheel 15 constantly rotates on its own axis. When the grinding wheel needs sharpening, the table 10 is moved along to the left so that the truing device 12 will be located under the grinding wheel 15 and then moved further so that the grinding wheel practically passes through the truing device.

This truing device is made up of sets of diamond impregnated tungsten carbide inserts which are brazed or welded in each case to a steel member. The first insert 19 is the roughing insert which the wheel strikes first and is shown in one piece. It is secured to a steel piece 21 held by screws 25. It is composed of coarse diamond chips properly bound together. The first insert is adjusted so that it is approximately .001" below the plane of the one piece semi-finish insert 20. The semi-finish insert 20 is compounded of finer diamond chips, of course, with a binder and is of the same shape as the roughing insert 19. Like that insert it has two oppositely inclined abrading surfaces and a central convex abrading surface preferably continuous with each other. These two oppositely inclined surfaces in 19 and 20 are called a pair of abrading surfaces and correspond with two inclined surfaces 16.

Two opposite inserts 16 are located at an angle to each other as indicated in Fig. 4. The steel members 17 are pivoted on a stud 18 which passes through the end of the truing device and they can be adjusted for different angles. The adjustment is held by a pair of screws 24.

After the wheel 15 passes by the semi-finish insert 20 it contacts with a part 22 of the finish insert which is approximately .0005" above the semi-finish insert. This part 22 is secured to a steel piece 23. The finish inserts 22 and 16 are composed of still finer mesh diamond chips which gives the periphery of the wheel a finer truing so that a good finish may be obtained for the final finish on the ground work. The three sets of inserts are arranged in steps with the first or roughing insert lower. Consequently, if only a slight amount of truing is necessary, the work may not touch the first insert at all.

As stated, this pair of inserts are arranged at an adjustable angle and are also adjustable together perpendicular to the face of the trim surface for wear adjustment. The angular adjustment takes care of the final angle desired in the W-shaped form. By this device the wheel may be formed up to the desired shape much more rapidly than heretofore and also irregular forms may be obtained within its scope.

By mounting the base 12 adjustably in a vertical direction and providing it with movement at right angles to the axis of the work being ground, the normal position of the finished trimming insert is set so that it coincides with the profile of the finished size of the work. Before it is done, the grinding wheel is moved down-

wardly slightly and thereafter can be used to produce the same pattern as before.

Having thus described our invention and the advantages thereof, we do not wish to be limited to the details herein disclosed, otherwise than as set forth in the claims, but what we claim is:

1. A grinding wheel truing device comprising a plurality of pairs of abrading surfaces, the two surfaces of each pair being set at an angle to each other and each pair being spaced apart, whereby a grinding wheel or the like can be relatively moved in a straight line through the series of abrading surfaces, the first pair of abrading surfaces being composed of comparatively coarse diamond impregnated material, the second of finer material of the same kind, and the last of very fine diamond impregnated material for finishing purposes.

2. A grinding article truing device comprising a stationary first grinding insert having the contour of the article to be ground, a steel piece on which the insert is mounted, a semi-finishing means comprising a stationary grinding insert, a steel piece on which the semi-finishing insert is fixed, a pair of finish grinding inserts, and a pair of pivotally mounted steel members on which the last two inserts are mounted in an inclined position, the last two inserts and the semi-finish insert constituting together a series of final finish surfaces.

3. A grinding article truing device comprising a stationary first grinding insert having the contour of the article to be ground, a steel piece on which the insert is mounted, a stationary semi-finish grinding insert located at a distance therefrom, a second steel piece on which the semi-finish insert is mounted, a final finishing means comprising a stationary grinding insert at a distance from the semi-finish insert, a steel piece on which last insert is fixed, a pair of finish grinding inserts, and a pair of pivotally mounted steel members on which the last two inserts are mounted in an inclined position, the last two inserts and the final finish insert constituting together a series of final finish surfaces similar to the contour of the first two inserts.

4. A grinding wheel truing device comprising a stationary first grinding insert in one piece having the contour of the article to be ground, a steel piece on which the insert is mounted, a semi-finish grinding insert located at a distance therefrom, a steel piece on which the semi-finish insert is mounted in a stationary position, a final finishing means comprising a stationary grinding insert placed at a distance from the semi-finish insert, a steel piece on which last insert is fixed, a pair of finish inserts, a pair of pivoted steel members on which the last two inserts are mounted in an inclined position, the last two inserts and the final finish insert constituting together a series of final finish surfaces similar to the contour of the first two inserts and adjustable to and from each other about the pivot to change angles, the first mentioned insert being diamond impregnated of comparatively coarse character, the semi-finish insert being diamond impregnated of finer nature, and the three finish inserts being diamond impregnated of a very fine nature.

5. A grinding wheel truing device comprising a first grinding insert, a steel piece on which the insert is mounted, a semi-finish grinding insert located at a distance therefrom, a steel piece on which the semi-finish insert is mounted, a final finishing means comprising a grinding insert placed at a distance from the semi-finish insert, a steel piece on which last insert is fixed, a pair of finish inserts formed with abrading surfaces of a material that has the same quality as the last named insert, and a pair of pivoted steel members on which the last two inserts are mounted in an inclined position, the last two inserts and the final finish insert constituting together a series of final finish surfaces similar to the contour of the first two inserts and adjustable from each other about the pivot to change angles, the first mentioned insert being formed of tungsten carbide mixed with diamond chips of comparatively coarse character, the semi-finish insert being formed of tungsten carbide with diamond chips of finer nature, the three finish inserts being of tungsten carbide of a very fine nature, and the three sets of grinding inserts being arranged in a straight line through which the work to be ground can be passed.

6. A grinding article truing device comprising a stationary first grinding insert having the contour of the article to be ground on circumference and sides, a steel piece on which the insert is mounted, a final finishing means comprising a stationary grinding insert at a distance from the first insert, a steel piece on which the last insert is fixed, a pair of finish grinding inserts, and a pair of pivotally mounted steel members on which the last two inserts are mounted in opposite inclined positions.

7. A grinding wheel truing device comprising a stationary grinding insert in one piece having the contour of the article to be ground, a steel piece on which the insert is mounted, a final finishing means comprising a stationary grinding insert placed at a distance from said first insert, a steel piece on which last insert is fixed, a pair of finish inserts, and a pair of pivoted steel members on which the last two inserts are mounted in an inclined position and adjustable to and from each other about the pivot to change angles, the last two inserts and the final insert constituting together a series of final finish surfaces similar to the contour of the first insert, the first mentioned insert being diamond impregnated of comparatively coarse character, and the three finish inserts being diamond impregnated of a very fine nature.

8. A grinding wheel truing device comprising a semi-finish grinding insert, a steel piece on which the semi-finish insert is mounted, a final finishing means comprising a grinding insert placed at a distance from the semi-finish insert, a steel piece on which last insert is fixed, a pair of finish inserts formed with abrading surfaces, and a pair of pivoted steel members on which the last two inserts are mounted in an inclined position, the last two inserts and the final finish insert constituting together a series of final finish surfaces similar to the contour of the first named insert and adjustable toward and from each other about the pivot to change angles, the first mentioned insert being formed of tungsten carbide mixed with diamond chips of comparatively coarse character, the three finish inserts being of tungsten carbide of a very fine nature, and the two sets of grinding inserts being arranged in a straight line through which the work to be ground can be passed.

GARDNER S. GOULD.
ELPHEGE D. LA FLEUR.