US00D724354S

(12) **United States Design Patent**
Sekine et al.

(10) **Patent No.: US D724,354 S**
(45) **Date of Patent: ** Mar. 17, 2015**

(54) **STORAGE RACK FOR OPTICAL DISK RECORDER**

(71) Applicant: **Panasonic Intellectual Property Management Co., Ltd.**, Osaka (JP)

(72) Inventors: **Takeshi Sekine**, Osaka (JP); **Kiyoshi Yoneya**, Osaka (JP)

(73) Assignee: **Panasonic Intellectual Property Management Co., Ltd.**, Osaka (JP)

(**) Term: **14 Years**

(21) Appl. No.: **29/511,102**

(22) Filed: **Dec. 5, 2014**

(30) **Foreign Application Priority Data**

Jun. 27, 2014 (JP) 2014-014050

(51) **LOC (10) Cl.** **06-04**

(52) **U.S. Cl.**
USPC **D6/630**

(58) **Field of Classification Search**
CPC G11B 33/022; G11B 33/0461; G11B 33/0466; G11B 2220/2537
USPC D6/407, 449, 626–630, 635; D9/418, D9/428; D3/218, 303, 304; 206/751, 755, 206/309–312, 232; 720/719, 655, 728, 734
See application file for complete search history.

(56) **References Cited**

U.S. PATENT DOCUMENTS

D245,300	S	*	8/1977	Mathus et al.	D6/569
4,123,128	A	*	10/1978	Abele	312/244
D259,450	S	*	6/1981	Veralrud	D6/629
4,293,075	A	*	10/1981	Veralrud	211/40
4,889,244	A	*	12/1989	Hehn et al.	211/40
D326,378	S	*	5/1992	Yunger et al.	D6/467
D346,510	S	*	5/1994	Long et al.	D6/407
D380,460	S	*	7/1997	Alfonso et al.	D14/365
D391,113	S	*	2/1998	Marhefka	D6/629
D458,504	S	*	6/2002	Liu	D6/630
D483,754	S	*	12/2003	Ueno et al.	D14/260.1
D488,000	S	*	4/2004	Chen	D6/407
D495,690	S	*	9/2004	Lin	D14/260.1
D517,548	S	*	3/2006	Wedding	D14/368
D610,833	S	*	3/2010	Grzybowksi et al.	D6/455
D618,481	S	*	6/2010	Mayer et al.	D6/630

* cited by examiner

Primary Examiner — Kelley Donnelly
(74) *Attorney, Agent, or Firm* — Panasonic Patent Center

(57) **CLAIM**

We claim the ornamental design for a storage rack for optical disk recorder, as shown and described.

DESCRIPTION

FIG. **1** is a front perspective view of a storage rack for optical disk recorder of the present invention;
FIG. **2** is a front view thereof;
FIG. **3** is a rear perspective view thereof;
FIG. **4** is a first side view thereof;
FIG. **5** is a second side view thereof;
FIG. **6** is a top view thereof; and,
FIG. **7** is a bottom view thereof.
The broken line showing of storage rack for optical disk recorder is included for the purpose of illustrating environment and forms no part of the claimed design.

1 Claim, 7 Drawing Sheets

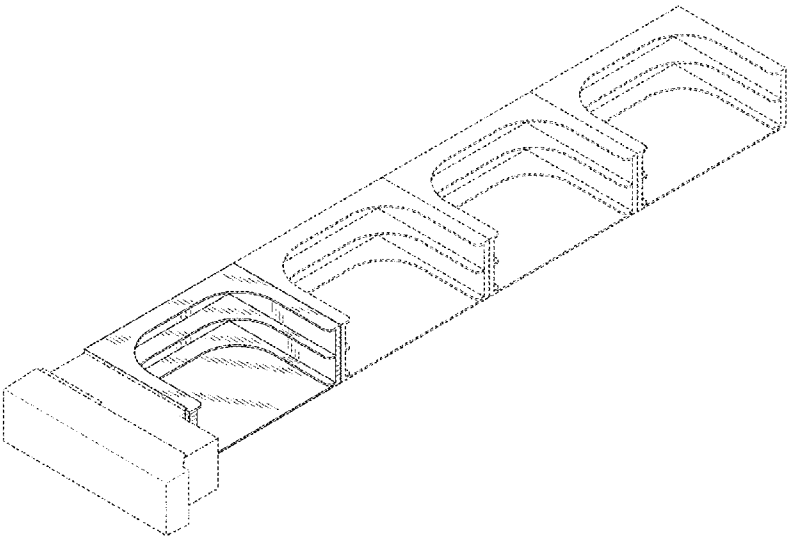

FIG. 1

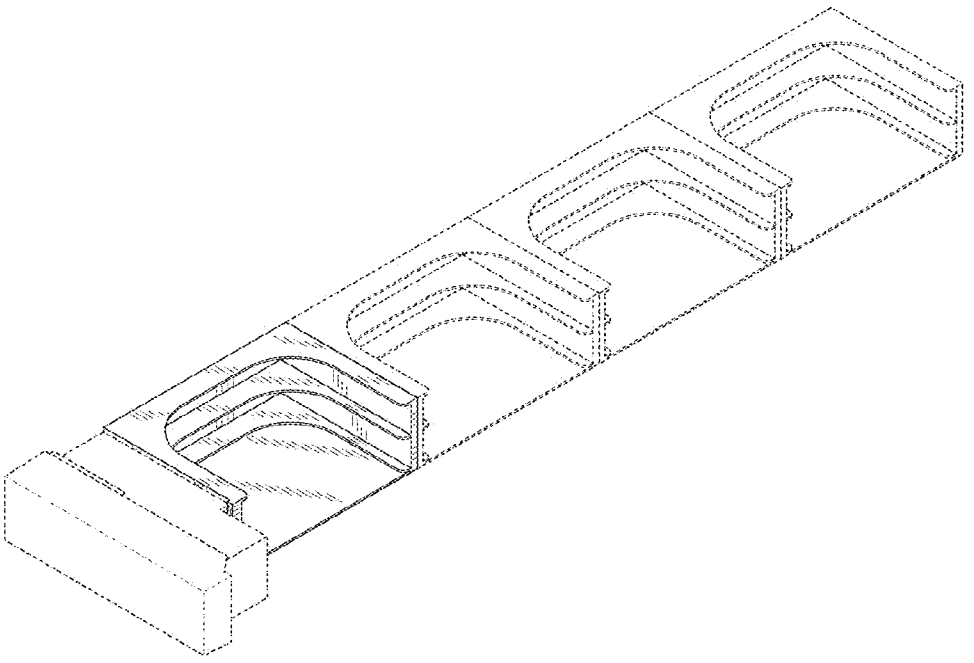

FIG. 2



FIG. 3

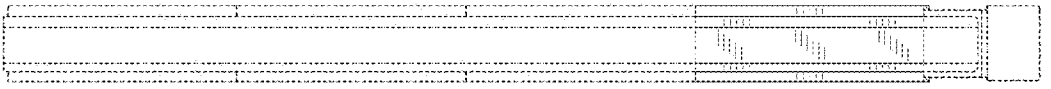

FIG. 4



FIG. 5



FIG. 6

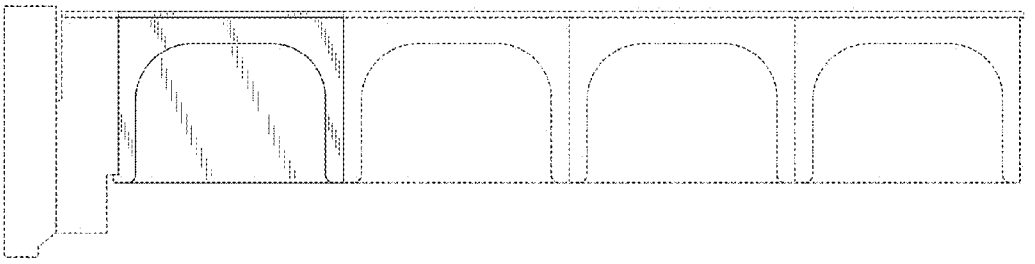

FIG. 7

