July 31, 1956 J. JANES 2,757,001

PIN SETTING DEVICES FOR BOWLING ALLEYS

Filed Feb. 17, 1950 6 Sheets-Sheet 1

Fig. 1a.

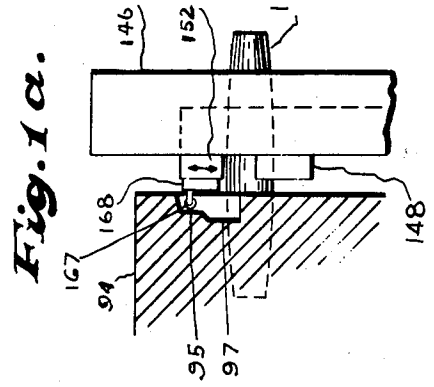

Fig. 1.

Inventor:
Joseph Janes
By Arnold C. Rood
Attorney

July 31, 1956 J. JANES 2,757,001

PIN SETTING DEVICES FOR BOWLING ALLEYS

Filed Feb. 17, 1950 6 Sheets-Sheet 2

Fig. 2.

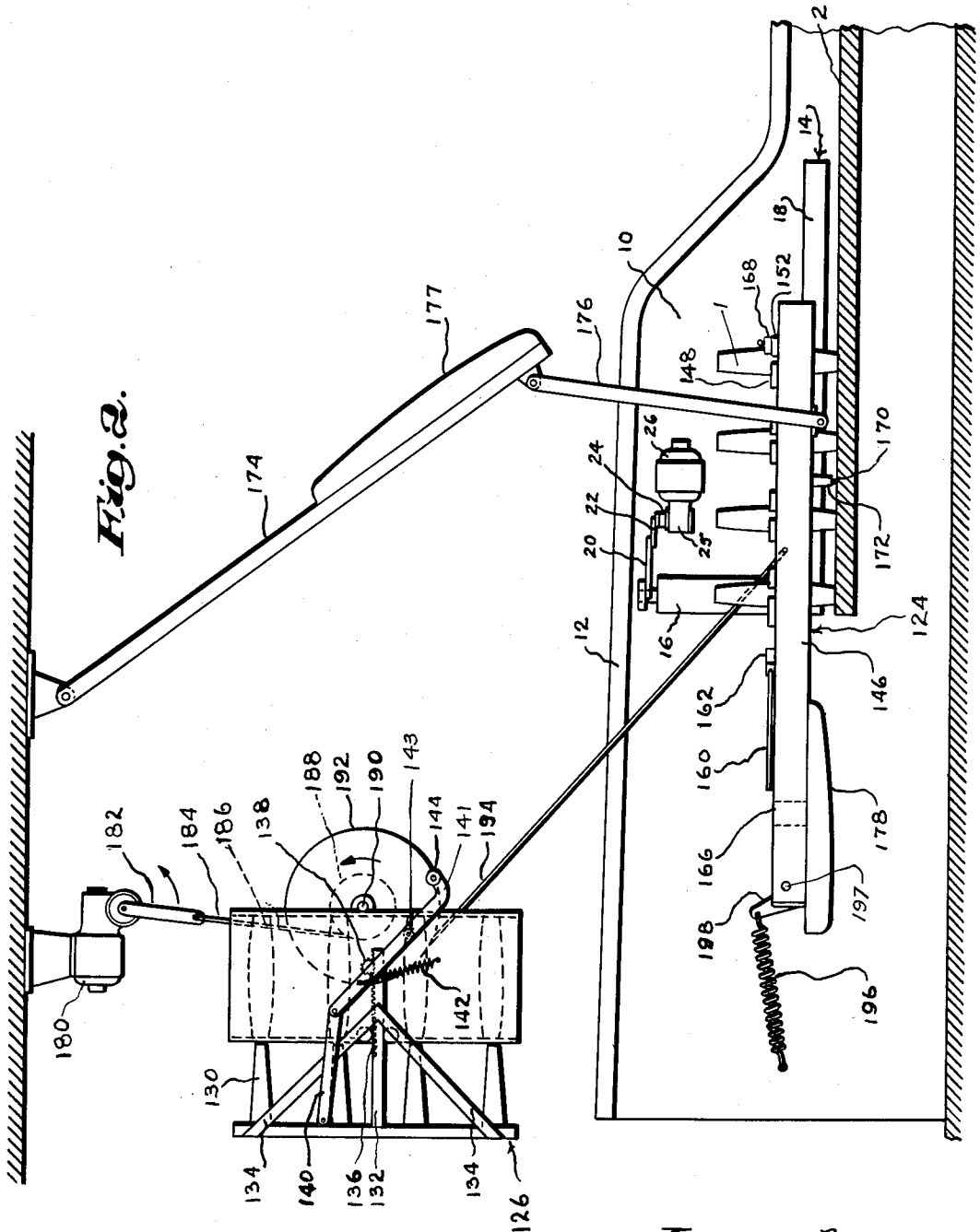

Inventor:
Joseph Janes
by Arnold C. Rood
Attorney

July 31, 1956 J. JANES 2,757,001

PIN SETTING DEVICES FOR BOWLING ALLEYS

Filed Feb. 17, 1950 6 Sheets-Sheet 3

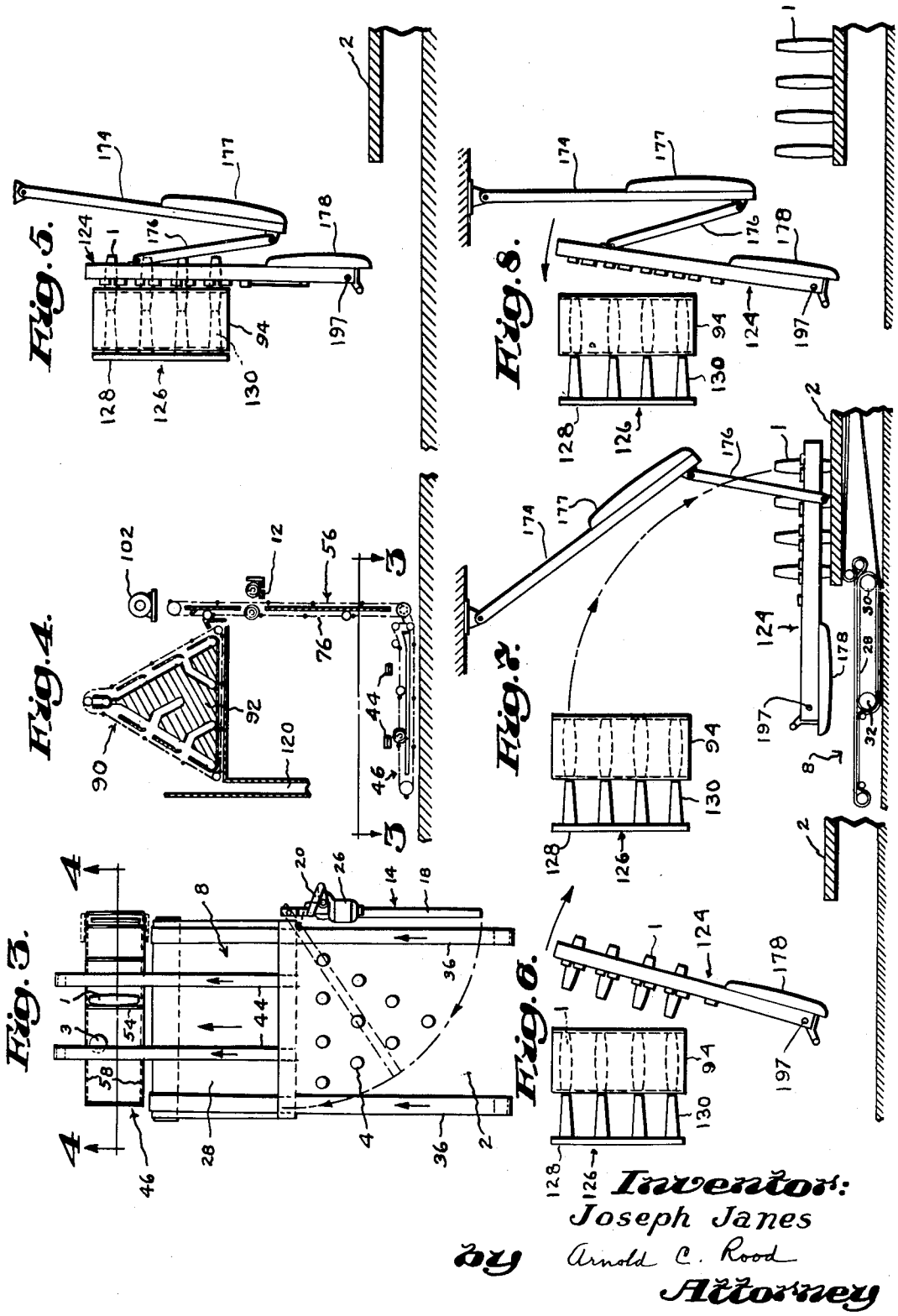

Inventor:
Joseph Janes
By Arnold C. Rood
Attorney

July 31, 1956 J. JANES 2,757,001

PIN SETTING DEVICES FOR BOWLING ALLEYS

Filed Feb. 17, 1950 6 Sheets-Sheet 4

Fig. 9.

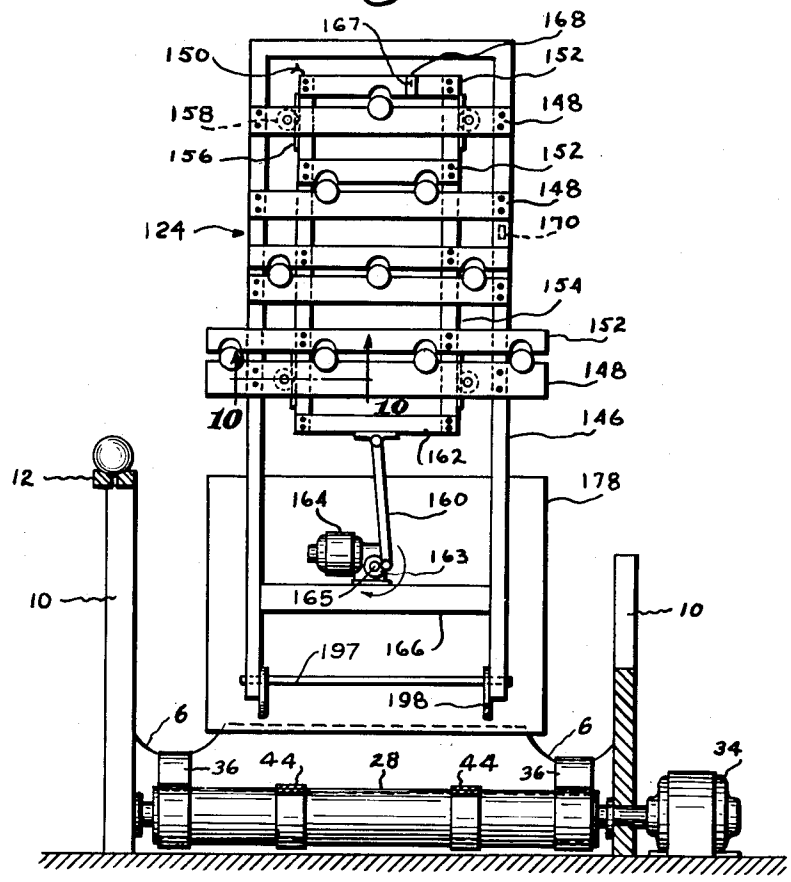

Fig. 10.

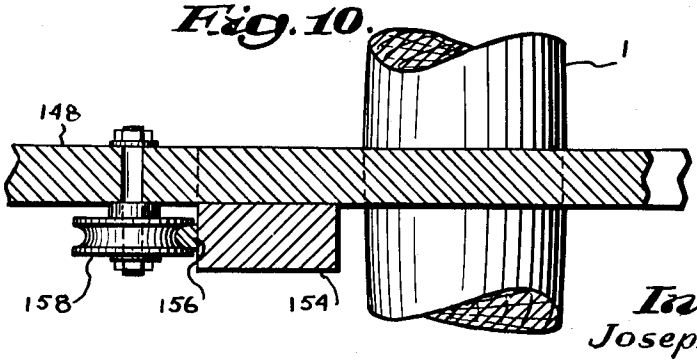

Inventor:
Joseph Janes
by Arnold C. Rood
Attorney

July 31, 1956 J. JANES 2,757,001

PIN SETTING DEVICES FOR BOWLING ALLEYS

Filed Feb. 17, 1950 6 Sheets-Sheet 5

Fig. 11.

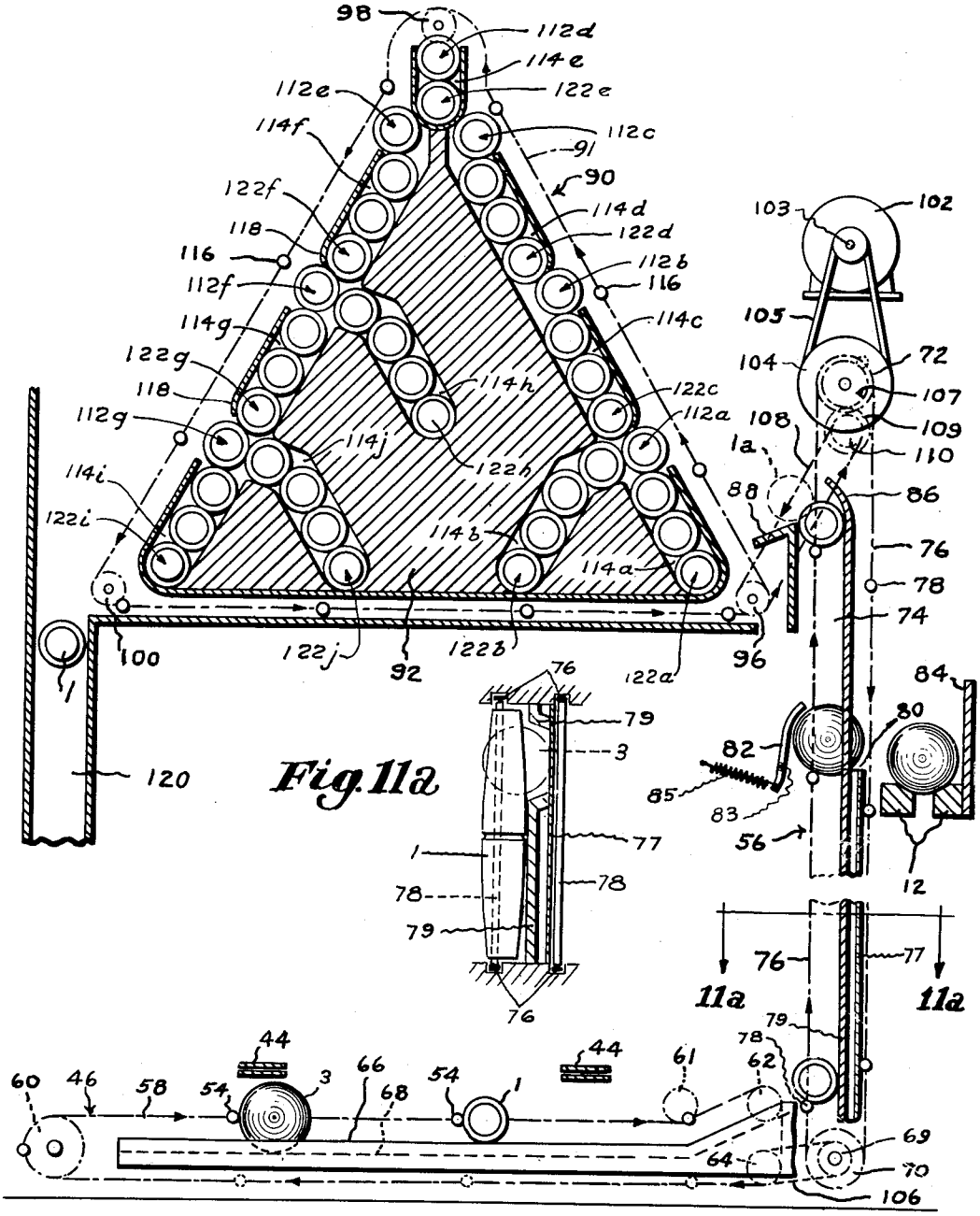

Inventor:
Joseph Janes
By Arnold C. Rood
Attorney

July 31, 1956 J. JANES 2,757,001

PIN SETTING DEVICES FOR BOWLING ALLEYS

Filed Feb. 17, 1950 6 Sheets-Sheet 6

Fig. 12.

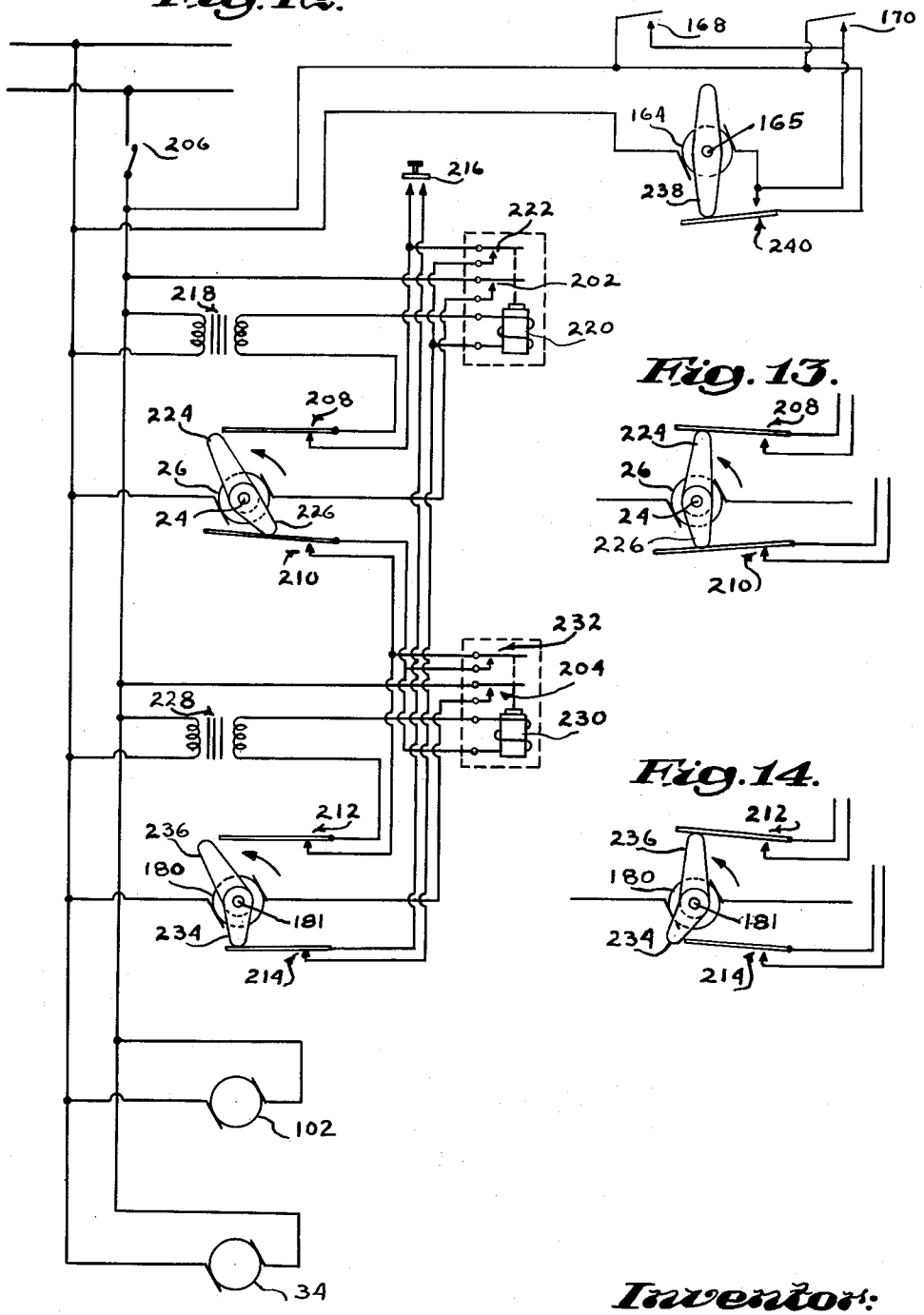

Fig. 13.

Fig. 14.

Inventor:
Joseph Janes
By Arnold C. Rood
Attorney

United States Patent Office

2,757,001

Patented July 31, 1956

2,757,001

PIN SETTING DEVICES FOR BOWLING ALLEYS

Joseph Janes, Arlington, Mass.

Application February 17, 1950, Serial No. 144,658

2 Claims. (Cl. 273—43)

This invention relates to improvements in bowling alleys, and more particularly to an improved pin-setting device suitable for use in the candle-pin game of bowling.

In the past, as is well-known, the game of bowling has required pin boys manually to set up the pins and to return the balls to the players. This has limited the playing of the game to those times when pin boys were available. This has also involved, especially in the larger alleys, the matter of personnel supervision and in many cases has involved the matter of providing transportation for the pin boys to and from the alleys. In many cases difficulties have been involved in obtaining pin boy personnel and the expense thereof in wages and other expenses has been considerable. These and other factors have limited considerably the availability of the game of bowling and its enjoyment on the part of many players.

In my co-pending application Serial No. 38,466, filed July 13, 1948 (now abandoned), I have disclosed and claimed a mechanical pin-setting device wherein cords are attached to the upper ends of bowling pins, such as duck pins, and the pins are removed upwardly from the alley bed after they have been knocked down. This type of pin-setting device is suitable for bowling games such as duck pin bowling where so-called "dead wood" or overturned pins are removed from the alley bed after each rolling of a bowling ball.

In candle pin-bowling, however, "dead wood" or fallen pins are required by the Official Rules to remain on the alley bed during the rolling of subsequent balls of each frame. For the candle-pin game, therefore, it is not feasible nor in fact permissible to employ pin-setting means wherein cords are attached to the pins.

In view of the foregoing, an object of this invention is to provide means whereby the setting of the pins may be accomplished mechanically at the instance of the player. Another object is to provide mechanical means for setting bowling pins wherein the pins are free from any mechanical attachments thereto during bowling. A further object is to provide a pin-setting device which will be effective and reliable in its operation. A still further object is to provide a pin-setting device suitable for candle pin bowling.

In accordance with the above and other objects there is provided by this invention a mechanical pin-setting device which is arranged to be operative at the instance of the player. The device is disclosed herein as comprising a pin-sweeper operable to sweep all pins and balls remaining on the alley after a play into the pit, a system of conveyors operable cooperatively to remove all pins and balls from the pit and selectively eject the balls onto a ball return extending to the player's position and the pins into a pin-storage magazine having stations therein for a setting of pins arranged in playing formation, a pin-punch operable to punch a setting of pins from said stations to a pin-setter, the pin-setter being operable to receive a setting of pins and to hold them firmly clamped in spaced formation. When required the pin-setter, which constitutes an essential feature of this invention,

transfers the setting of pins to the respective pin spots on the alley bed, and it returns out of the bowler's way to the magazine to receive another setting of pins. The various members of the device are so co-ordinated in operation as to enable a player at will to cause the alley to be cleared and reset with pins immediately thereafter.

A preferred embodiment of the mechanically operating pin-setting device of this invention is illustrated in the drawings, in which;

Figure 1 is a side elevation, partly in section, showing the pin-setting device with the system of conveyors in operation and the pin-setter at its upper terminus adjacent to the pin-storage magazine;

Fig. 1A is an enlarged fragmentary sectional view of means for controlling the operation of the pin-clamping mechanism of the pin-setting device when the latter is in the position shown in Fig. 1;

Fig. 2 is a side elevation partly in section showing the pin-setting device with the conveying mechanism omitted, and showing the pin-setter at its lower terminus with the pins on the alley;

Figs. 3 to 8 inclusive are diagrammatic views illustrating the operation of the pin-setting device of which

Fig. 3 is a plan view of the rearward end of the alley taken on line 3—3 of Fig. 4, indicating the sweep of the pin-sweeper, and showing conveying means for conveying balls and pins rearwardly of the pit and laterally of the alley;

Fig. 4 is a vertical section taken on line 4—4 of Fig. 3, showing the pin-magazine and the ladder conveyor system for conveying the balls to the ball return, and the pins to the magazine;

Fig. 5 is a side elevation illustrating the loading of the pin-setter by the pin-punch;

Fig. 6 is a view showing the pin-punch withdrawn from the magazine to allow a new set of pins to fall into the pin discharge stations of the magazine and showing the pin-setter, loaded with pins, moving toward its lower terminus;

Fig. 7 is a side view showing the pin-setter in pin-setting position on the alley;

Fig. 8 is a side view showing the pin-seter approaching the magazine after depositing a setting of pins on the alley bed;

Fig. 9 is a rear vertical section taken on line 9—9 of Fig. 1 showing the pin-setter at its upper terminus in pin-loading position and prior to completion of the clamping operation;

Fig. 10 is an enlarged fragmentary sectional view taken on line 10—10 of Fig. 9 illustrating the mounting of the pin-clamper on the pin-setter frame for longitudinal travel thereon;

Fig. 11 is a fragmentary vertical section showing the pin magazine and the ball return, and illustrating the operation of ball and pin conveyors;

Fig. 11A is a horizontal section taken on line 11A—11A of Fig. 11.

Fig. 12 is a diagrammatic view of an electrical system for the operation of the pin-setting device illustrated herein and showing the position of motor controls when the line switch is open;

Fig. 13 is a fragmentary diagrammatic view showing motor controls just before the completion of the pin-sweeping operation; and

Fig. 14 is a fragmentary diagrammatic view showing other motor controls just before the completion of the pin-setting operation.

A bowling alley is shown provided in the conventional manner with an alley bed 2, furnished with pin spots 4 at the pit end thereof, two side gutters 6, a pit 8, kickbacks 10, and a ball return 12 associated with one of said kick-

backs. Pins 1 and balls 3 are shown in various positions in the drawings.

A pin-sweeper 14 for sweeping the pins and balls from the alley into the pit is shown in the form of an L-shaped gate (Fig. 1) and shown built into a kickback 10 for operation therefrom and to lie flush therewith when not in operation so as not to be harmed by flying wood. The vertical member 16 of the pin-sweeper is shown pivotally mounted on kickback 10 with the horizontal member 18 extending therefrom and with its end free to be swung outwardly from said kickback and across the alley to the opposite kickback in a horizontal arc of substantially 90°. To the vertical member 16 there is shown (Fig. 1) pivotally secured an arm 20 which at its outer end is pivoted to a shorter arm 22. This shorter arm 22 is secured to a vertical shaft 24 of a speed reducer 25 associated with a motor 26 mounted on the kickback 10 beneath the ball return 12. The outward sweeping and return of the pin-sweeper 14 may be accomplished by one revolution of the shaft 24. The speed reducing gear box 25 gives the shaft 24 a speed of rotation consistent with optimum performance of the pin-sweeper.

A plurality of conveyors are arranged to travel rearwardly from the gutters, and from the pin floor at pit level, and co-operate to convey all balls and pins falling thereon rearwardly of the pit and to drop them into the path of a horizontally-positioned, transversely moving ladder conveyor which conveys them to one side of the alley to an upwardly moving ladder conveyor which in turn conveys them upwardly along the side of the alley, permitting the balls to be ejected onto the ball return and the pins onto an angular ladder conveyor which conveys the pins to spaced entrances to the pin-magazine.

This system of conveyors may be in continuous operation during use of the alley. Belt 28 is shown (Fig. 3) postioned in the pit 8 with its upper surface at conventional pit level and extending laterally the width of the pit and rearwardly from the rear ends of the pin bed and gutters the length of the pit. This belt 28 is shown (Fig. 1) carried around idler roller 30 and driven roller 32 which is driven by motor 34 (Fig. 9), to cause the upper course of said belt to move in a rearward direction. In the rearward portion of the alley gutters 6, and forming a rearwardly moving base portion of said gutters, are shown gutter belts 36 (Figs. 1, 3 and 9). These guter belts 36 are shown (Fig. 1) carried around idler roller 38, and around idler rollers 40 and 42 which lower the upper course of the belt from gutter level to pit level, where they are carried on top of the upper course of the belt 28 and around driven roller 32 and under idler roller 30 back to idler roller 38. These gutter belts convey any pins or balls lodging in the gutters to the pit and assist the belt 28 in conveying them to the end of the pit. Pit straightener belts 44 (Figs. 1, 3 and 9) are shown being carried from idler roller 30 along the top of the upper course of belt 28 and across and above the said transversely moving lateral ladder conveyor 46 to idler roller 48 and around it to return by passage over idlers 50 and 52 immediately beneath the upper course, to driven roller 32 which they pass around to underlie the lower course of wide belt 28 and are carried back around idler roller 30. These straightener belts 44 act to straighten the pins and to align them longitudinally with respect to the ladder rungs 54 on said transversely moving lateral ladder conveyor 46. Positioned adjacent to the rearward end of the pit 8 is shown the horizontal or transverse ladder conveyor 46 (Figs. 3 and 11), which travels rearwardly of the pit transversely to one side of the alley, and adjacent to the base of vertical ladder conveyor 56 traveling upwardly at that side. This transverse ladder conveyor 46 comprises two parallel sprocket chains 58 spaced apart a distance slightly greater than the length of a pin 1 and joined together by means of spaced rungs 54, between which balls and pins are received from the pit and gutter belts and are conveyed transversely. The chains 58 of the transverse ladder conveyor 46 are shown (Fig. 11) carried around a pair of idler sprockets 60, under sprockets 61, and around pairs of idler sprockets 62 and driven sprockets 64 to return. Sprockets 64 are shown (Fig. 11) driven by chain belts 106 passing around the hubs 69 of sprockets 70. Pairs of sprockets 61 and 62 are mounted to cause the upper course of the lateral ladder conveyor 46 to approach the upwardly moving course of vertical ladder conveyor 56 on a slight up-grade so that the travel of the balls and pins onto that course may continue smoothly. These various pairs of sprockets are shown mounted at each side of the alley to permit the transverse ladder conveyor 46 to travel over and under a conveyor floor 66 upon which the pins roll as they are being pushed along by the rungs 54 of said conveyor. This floor 66 slopes downwardly toward the rear and is shown grooved along its rearward side to provide a transverse ball trough 68 into which the balls roll, and in which they are conveyed in a straight path to the vertical ladder conveyor.

The vertical ladder conveyor 56 is shown as having a sprocket chain-rung construction similar to that of transverse ladder conveyor 46. Pairs of idler sprockets 70 and driven sprockets 72 are shown (Fig. 11) mounted respectively at the bottom and at the top of an elevator well 74 to permit the two sprocket chain belts 76 to travel from sprockets 70 upwardly over sprockets 72 and return downwardly on the other side of the elevator well. The well 74 is shown as comprising an outer wall 77 against which the balls ride and inwardly disposed walls 79 against which the pins ride. The outer wall 77 assists in supporting the balls on the rungs during their upward travel to the ball return. The pins are supported in their upward travel between the rungs and the inwardly disposed walls 79 of the well 74.

Wall 77 is provided with an opening 80 at ball return level having a width less than the length of the horizontal pins and through which balls 3 are ejected into ball return 12. Ball ejection is accomplished by means of a ball ejector which includes a plate 82 (Fig. 11) pivotally mounted on pivots 83 supported by the sides of well 74. The plate 82 is yieldably held in ball-contacting position by spring 85. This plate is so located that candle pins may move upwardly without substantially moving the plate backward, but balls, because of their larger diameter, push the plate backwardly against the resistance of the spring to a point which permits the passage of a ball at its maximum diameter but as the ball rises a little beyond its maximum diameter, the spring pressure on the plate causes it to eject or snap the ball outwardly through the opening 80 in the well to the ball return 12. The vertical ladder conveyor is so arranged in travel that there is never any rung on the downwardly traveling section of said conveyor in a position to interfere with a ball being ejected from a rung on the upwardly traveling section. The ball return 12 adjacent to the well opening is provided with a wall or baffle 84 to guide the ball into the return 12.

The pins are transferred from the vertical ladder conveyor 56 to conveyor 90 at a point above the ball return and below the upper pair of sprockets 72. Transfer is shown as accomplished by means of the curved pin ejector or deflector 86, which, as the pins ride up on the rungs 78, pushes them laterally toward the inclined trough or ledge 88, and as indicated at 1A, the pins roll down the member 88 onto conveyor 90.

Conveyor 90 is a ladder type conveyor similar to transverse ladder conveyor 46 and vertical ladder conveyor 56 and having spaced sprocket chains 91 and connecting rungs 116. It is shown (Fig. 11) arranged to traverse the sides of a triangularly shaped pin magazine 92. The conveyor and pin magazine structure conveniently is provided with a housing 94 (Figs. 1 and 2). Sprocket chains 91 are shown (Fig. 11) as carried around a pair of driven sprockets 96 at one end of the base of triangular magazine 92, over a pair of sprockets 98 at the apex, and around a pair of sprockets 100 at the other end of the base to

return. Thus the course of this angular ladder conveyor proceeds upwardly along an angular outer wall of the magazine to its apex and downwardly along the opposite angular outer wall and horizontally beneath the base to return. Chains **91** are guided in the path shown in Fig. 11 by tracks (not shown).

All three ladder conveyors, namely, transverse conveyor **46**, vertical conveyor **56**, and angular conveyor **90** may be operated by a single motor **102** shown (Fig. 11) mounted at the top of elevator shaft **74**. This may be accomplished by mounting a pulley **104** on the same shaft on which sprockets **72** are mounted and driving said shaft from motor **102** by means of pulleys **103** and **104**, and belt **105**. Vertical conveyor **56** is driven from sprockets **72**. The lateral ladder conveyor **46** conveniently may receive its drive from chain belts **106**, shown (Fig. 11) passing around the hubs of sprockets **70** and around sprockets **64** to transmit motion to sprockets **64**. The angular ladder conveyor **90** conveniently may receive its drive from chain belts **108** shown (Fig. 11) passing around pairs of sprockets **110** and **96**. Gears **107** are shown mounted on the same shaft as sprockets **72**. The gears **107** engage with gears **109** which are mounted on the same shaft as sprockets **110**. These gears are employed to reverse the direction of the chain belts **108** to operate sprockets **96** in such direction that the chains **91** will move upwardly from the ledge **88**.

The walls of pin magazine **92** within the path of conveyor **90** are shown apertured to provide spaced pin entrances, generally numbered **112**, to a system of chutes, generally numbered **114**, at the bottoms of which are stations, generally numbered **122**, spaced in accordance with the playing arrangement of bowling pins on the alley. The pin entrances, in the order in which they are reached by the conveyor **90**, are numbered **112***a* to **112***g* inclusive. The chutes are indicated at **114***a* to **114***j* inclusive, and the stations are indicated at **122***a* to **122***j* inclusive. It will be noted that curved surfaces **118** in the outer wall of the magazine serve to locate stations **122***c, d, f* and *g*. The front and rear walls of the magazine **92** are apertured opposite the stations **122** to permit the pin-punch **126** to transfer pins from said stations to the pin-setter **124**, as will be explained more fully hereinafter. Chute **120** is provided whereby surplus pins may be returned to the lateral conveyor **46**.

In operation, the conveyor **90** will convey pins first to the entrance **112***a*, and chutes **114***a* and **114***b* first will be filled with pins. Subsequently the chutes, taken in counterclockwise direction as shown in Fig. 11, progressively will be filled. Any surplus pins will be returned to the lateral conveyor **46** through the chute **120**.

The loading of the pin-setter **124** from the magazine **92** may be accomplished by a pin-punch **126** which punches the pins at stations **122** into clamping position within the pin-setter. A pin-punch **126** is shown (Figs. 1 and 2) which includes a vertical frame **128** upon which (as shown) ten punches or punch pins **130** are mounted to project longitudinally into the pin-stations **122** of the pin-storage magazine **92**. These punch pins **130** have a length sufficient to project pins from the magazine stations **122** into the pin-setter **124** so that the pin-setter may grasp the pins at approximately their mid-section, namely, the portion of maximum diameter. The punches **130** are of such cross-section that they readily enter the stations **122**.

The pin-punch **126** is positioned rearwardly of the magazine **92** and housing **94** with the ends of the punch pins **130** projecting forwardly and in longitudinal alignment with the stations **122** of the magazine. Bars **132** secured to the pin-punch frame **128** extend forwardly therefrom along both sides of magazine **92** and housing **94**. These bars **132** are shown additionally supported from frame **128** by braces **134**. The thus braced bars **132** are shown as slidable longitudinally of the bowling pins on roller bearings **135** secured to the side walls of the housing **94**. The upper surfaces of the bars **132** are shown as provided with racks **136**. Pinions **138** are rotatably mounted in fixed position, as on the lateral walls of the housing **94**, and are arranged to mesh with said racks. To actuate the pin-punch into and out of the stations, there is provided at one side of the magazine housing **94** a link **140** which is pivotally secured at one end to the pin-punch frame **128** and at the other end to the link **141** which latter is fulcrumed to the housing **94** at **143**. At its free forward end the link **141** is provided with a contact roller **144** with which a surface of the pin-setter **124** may contact to actuate the pin-punch **126**. The pin-punch **126** is maintained in rearward or withdrawn position by tension spring **142** which is secured to the link **141** between the end thereof which is pivoted to the link **140** and the fulcrum **143**. The spring **142** is also secured to a fixed member (not shown) whereby the spring **142** will be placed under tension when the roller **144** of the link **141** is pressed rearwardly.

In operation, when the pin-setter **124**, after having deposited a set of pins on the alley, moves upwardly to its upper terminus adjacent to the pin-magazine **92**, a surface of the pin-setter **124** contacts the roller **144** and pushes it rearwardly, thereby causing the pin-punch **126** to move forwardly. The punches **130** are thereby caused to move forwardly into the stations of the magazine **92** and to transfer a new set of pins from the magazine to the pin-setter **124**. The pin-punch **126** remains in its forward position with the punches **130** in the stations **122** until the pin-setter **124** moves downwardly into pin-setting position on the alley. At this time the pressure of the pin-setter **124** on the roller **144** is released, and then, due to the action of the spring **142**, the pin-punch moves to its rearward position and the punches **130** are withdrawn from the stations **122**. The withdrawal of the punches **130** from the stations **122** permits the pins in the chutes **114** to move downwardly to fill the stations **122** with a new set of pins.

The pin-setter **124** is arranged to receive a set of pins arranged in playing formation from the stations of magazine **92** and to hold them in clamped position until they are required by the bowler. When a setting of pins is desired, the pin-setter is arranged to carry the pins down to playing position on the alley bed, release the pins there, and return to its upper terminus adjacent to the pin magazine to receive and hold a new setting of pins until the latter is required.

In Fig. 1, the pin-setter **124** is shown at its upper terminus adjacent to the pin-magazine and housing **94** in pin-receiving position. In Fig. 2, the pin-setter **124** is shown at its lower terminus adjacent to the alley floor **2** with the pins **1** disposed on their respective pin spots.

The pin-setter **124** is shown having a frame **146** which is pivotally mounted on rod **197**. The rod **197** is carried by any suitable supporting means which, in order not to obscure operative parts, is not shown.

Transverse bars **148**, secured to the longitudinal supports of frame **146**, are positioned so as to engage the lower surfaces of the pins ejected from the magazine **92** through the stations **122** when the pin-setter is at its upper terminus adjacent to the magazine **92**, and said bars may be grooved to engage said pins.

To hold the pins firmly within the pin-setter, a pin-clamper **150** is shown (Fig. 9) mounted on frame **146** for movement longitudinally thereof. This pin-clamper **150** includes transverse bars **152** cooperable with the lateral bars **148** to clamp pins **1** therebetween. The transverse bars **152** are shown grooved at the points of pin engagement. Pin-clamper **150** (Figs. 9 and 10) is arranged for guided movement longitudinally of the pin-setter frame **146** by the engagement of steel tracks **156**, shown mounted on the outer sides of longitudinal members **154** of clamper **150**, and the flanged surfaces of rollers **158**, mounted on lateral bars **148** of the pin-setter **124**. For movement of the pin-clamper, arm **160** is

shown pivotally secured to the transverse member 162 of said pin-clamper, and to lever arm 163 secured to the discharge shaft 165 of a gear reducer associated with a motor 164. Said motor is mounted on horizontal member 166 of the pin-setting frame. When the motor is actuated, one-half a revolution of the shaft 165 operates to draw the pin-clamper into pin-clamping position, and the final half revolution to withdraw the pin-clamper into pin-releasing position.

Limit switch 168 is mounted near the outer end of pin-clamper 150 and is arranged to initiate the actuation of pin-clamper motor 164 to cause the pin-clamper 150 to clamp the pins in position when the pin-setter 124 is at its upper terminus (Figs. 1 and 1A). Limit switch 170 mounted on stop 172 is arranged to initiate the actuation of pin-clamper motor 164 to release the pin-clamper 150 when the pin-setter 124 is at its lower terminus adjacent to the alley bed (Fig. 2). The detailed operation of pin-clamper motor 164 will be described hereinafter.

The pin-setter 124 is shown (Figs. 1 and 2) associated with a hinged screen 174, pivotally supported above the pit and forwardly from the pin-setter so that during play it shields the pin-setter. Links 176 on both sides of the screen are pivotally attached at one end to the base of screen 174 and at the other end to frame 146. These links 176 move the screen 174 relative to the pin-setter during the operation thereof to shield it at all times. The screen 174 may be provided with padding 177. Bumper 178 secured to the lower portion of frame 146 constitutes a conventional bumper at the end of the pit during play.

Brackets 198 are secured to the longitudinal members of pin-setter frame 146 adjacent to the pivotal mounting 197. Tension springs 196 are secured at one end to the brackets 198 and at the other end to fixed supports (not shown). The springs 196 are shown as being under tension when the pin-setter 124 is at its upper terminus (Fig. 1) and also as under tension when the pin-setter 124 is at its lower terminus (Fig. 2). The springs 196 thus serve in part as a counter-balance and help to initiate the movement of pin-setter 124 from each terminus.

The operation of the pin-setter 124 conveniently may be carried out by means shown in Figs. 1 and 2. Supported from above is shown motor 180 with which is associated a gear reducer. The discharge shaft of the gear reducer is provided with a lever arm 182 at the outer end of which is pivotally connected chain 186, the other end of which is fixed to a sprocket 188 carried on a transverse shaft 190. For convenience in operation, a portion of the chain 186 near the motor may be replaced by a rod 184, as indicated in Figs. 1 and 2. Transverse shaft 190 also carries at each end thereof a grooved pulley 192, suitably of aluminum, around which a roller chain 194 is arranged to wind. One end of each roller chain 194 is fixed to a pulley 192. The roller chains 194 pass around the pulleys 192 and forwardly to the sides of the pin-setter 124 to support the pin-setter from each side.

When the lever arm 182 moves downwardly the tension of springs 196 (Fig. 1) initiates the downward movement of pin-setter 124, which is continued by the weight of the pin-setter. The downward movement of the pin-setter causes chains 194 to unwind from pulleys 192 and causes the pulleys 192, shaft 190, and sprocket 188 to rotate in counter-clockwise direction, whereby the chain 186 is wound on sprocket 188. The downward movement of the pin-setter 124 is retarded and controlled by the motor-controlled rotation of arm 182.

Conversely, when the lever arm 182 moves upwardly, the chain 186 unwinds from sprocket 188 causing this sprocket to turn shaft 190 in a direction to cause pulleys 192 in turn to wind up chains 194 thereon and thereby to raise the pin-setter. There is no reciprocating motion of the lever arm nor any reversal of the direction of the motor. One revolution of the lever arm completes the down-up cycle of the pin-setter frame 124.

In the operation of the pin-clamper 150, it is desired to have the clamping pressure on the pins released when the pin-setter 124 is at its lower terminus (Fig. 2), and to have the clamping pressure applied after reception of pins at the upper terminus (Fig. 1). Furthermore, after the application of clamping pressure at the upper terminus, it is desired to stop the pin-clamper motor 164 when the clamping pressure is applied, and in order that the motor may not continue to reciprocate the pin-clamper 150. Also it is desired to stop the motor 164, after the release of clamping pressure at the lower terminus.

To accomplish the above, the motor 164 may be stopped at the end of each half revolution of the speed reducer discharge shaft 165 (Figs. 9 and 12), that is, when the pin-clamper is in pin-clamping position, or in pin-releasing position. Thus, a double cam 238 (Fig. 12) mounted on the speed reducer shaft 165 of the motor opens a limit switch 240 (Fig. 12) in the circuit powering the motor when the pin-clamper has attained these positions. Conveniently shaft 165 may be a double extension shaft and the pivot arm 163 mounted on one extension and the double cam 238 mounted on the other extension. The motor 164 suitably may be started at the proper times by means of limit switches 168 and 170 connected within the motor actuating circuit which serve to short circuit the cam-operated limit switch 240. Switches 168 and 170 have spring contact arms arranged to provide switch-closing contact when the pin-setter is in pin-receiving position or pin-setting position.

Limit switch 168 (Fig. 9) has a spring-pressed contact arm 167 (Fig. 1A) arranged to strike against the suitably recessed forward wall of magazine housing 94 when the pin-setter reaches its upper terminus or pin-receiving position. Contact arm 167 moves with the movable lateral member 152 of the pin-clamper 150. The portion of the front wall of the magazine housing 94 with which the spring contact arm 167 cooperates during movement of the horizontal bar 152 to pin-clamping position, is shown (Fig. 1A) recessed to provide an upper recessed surface 95 against which the spring arm may press to close the limit switch 168 and a lower and more deeply recessed surface 97 which is beyond the reach of the contact arm 167. When the contact arm 167 makes initial contact with the upper recessed surface 95, the pin-clamper motor 164 is energized through completion of a circuit which short-circuits the limit switch 240 held open by the double cam (the circuit will be explained more in detail hereinafter). With the energization of motor 164, the pin-clamper members 152 are drawn inwardly, or as shown in Figs. 1 and 1A, downwardly, toward the pin-setter members 148, carrying with them the limit switch 168 and contact arm 167.

When the contact arm 167 has moved downwardly opposite the more deeply recessed surface 97, the contact of arm 167 with limit switch 168 is broken, and by this time the double cam 238 has rotated out of contact with the limit switch 240 which it held open. The portion of the circuit in which switch 240 is located thereupon becomes effective and the motor 164 continues to operate until shut off by the other end of cam 238 at the completion of half a revolution. At this time the pin-clamper 150 is in clamped position, as shown in Fig. 1.

Limit switch 170 is mounted on stop 172 (Figs. 1 and 2) and has a contact arm arranged to contact the alley bed when the pin-setter is in pin-setting position. When the contact arm closes the limit switch 170, it closes another portion of the circuit which powers motor 164, and short circuits the limit switch 240 held open by the double cam 238, and thereby initiates the operation of motor 164 to move the pin-clamper 150 outwardly into pin-releasing position. When the pins have been released and the pin-setter has started on its return to the magazine, the limit switch 170 has opened, but by this time the double cam 238 has rotated out of contact with the limit switch 240 which it held open. The portion of the circuit in which switch 240 is located thereupon becomes effective and

the motor **164** continues to operate until shut off by the other end of cam **238** at the completion of half a revolution. At this time the pin-clamper is in release position, substantially as shown in Fig. 1A.

It will be noted that throughout the figures of the drawings, various suitable supporting means have been omitted in order not to obscure the showings of the various operative mechanisms.

It will be apparent that whereas it may be desirable to have the conveyor belts and the ladder conveyors in continuous operation during play, the sequential operations of the pin-sweeper and the pin-setter are desired only at certain intervals during play. Conveniently these sequential operations may be initiated by the player, and suitably by means of an electrical push-button located near the player's position.

An electrical system suitable for the operation of the pin-setting device of this invention is shown diagrammatically in Fig. 12. This system includes two circuits operating on different voltages. One circuit includes the motors actuating the conveyors, the pin-sweeper, the pin-clamper, and the pin-setter, and is powered with current from a main line source, for example 110 volts, alternating current to which the circuit is shown connected by a main switch. The second circuit is shown connected by transformers **218** and **228** with the first circuit to take off a low voltage current sufficient to energize relays. These relays control the operation of switches in the first circuit connecting the pin-sweeper motor and the pin-setter motor to the main line current. The actuation of this second circuit is initiated by an electric push button **216** located at the player's position.

The motor circuit includes motor **34** actuating the conveyor belts, and motor **102** actuating the ladder conveyors, each directly connected to the power line, pin-clamper motor **164** connected selectively through switch **240**, switch **168** or switch **170**, pin-sweeper motor **26**, connected through switch **202**, and pin-setter motor **180** connected through switch **204**. A main switch **206** is shown connecting this motor circuit to a main line source of current supply. While switch **206** is closed, the motors **34** and **102** will be energized to drive continuously the conveyor belts and the ladder conveyors. Pin-clamper motor **164** will be energized only while cam-operated switch **240**, limit switch **168**, or limit switch **170** is closed, as hereinabove described. Pin-sweeper motor **26** and pin-setter motor **180** will be energized only while electrically operated switch **202**, in the case of the pin-sweeper motor **26**, and electrically operated switch **204**, in the case of the pin-setter motor **180**, are closed. Consequently, the operation of the pin-sweeper and the pin-setter is dependent upon the electrical operation of these switches. The push-button or low voltage circuit is arranged to operate the above switches in timed relation to each other so that the operation of the pin-sweeper will be substantially completed before the operation of the pin-setter starts, and so that the pin-sweeper cannot be put into operation again until the operation of the pin-setter is substantially completed. This not only provides the desired sequential clearing of the alley bed and resetting of it with pins for the next play, but safeguards the pin-sweeper and pin-setter from injury from each other should the player's push button accidentally be pressed while either of these devices is in operation.

Conveniently, mechanically operated microswitches are included in the push-button circuit, operable by the driving mechanism of the pin-sweeper and the pin-setter successively to isolate portions of the circuit from the remainder. Accordingly, the pin-sweeper and the pin-setter mechanism suitably include cams angularly disposed, and mounted on the speed reducer discharge shafts of motors **26** and **180** (Figs. 13 and 14). Cams **224** and **226**, on the speed reducer shaft **24** of pin sweeper motor **26** are mounted in spaced relation on said shaft so that said cams may cooperate independently with their respective

switches. Cams **234** and **236** are similarly mounted. These cams are arranged to bear momentarily during their rotation on the electrical contacts of microswitches, opening or closing them as required for the isolation of portions of the push-button circuit. Thus, the cams mounted on shaft **24** of the pin-sweeper motor **26** may be arranged so that when the pin-sweeper is in stationary position against the kickback, the normally closed microswitch **208** in the portion of the circuit controlling the pin-sweeper switch **202** is closed and the normally opened microswitch **210** in the portion of the circuit controlling the pin-setter switch **204** is open (Fig. 12).

Cams mounted on the speed reduced discharge shaft **181** of motor **180** are arranged so that when the pin-setter **124** is in stationary position at its upper terminus adjacent to the magazine **92**, the normally closed microswitch **212** in the portion of the circuit controlling the pin-setter switch **204** is closed, and the normally opened microswitch **214** in the portion of the circuit connecting the bush button is closed by cam **234**, so that the push button **216** may be pressed to initiate flow of current within this circuit.

When the pin-sweeper is adjacent to the kickback and the pin-setter is at its upper terminus, and microswitches **208** and **214** are closed, pressing of push button **216** momentarily completes the push-button circuit, and the secondary winding of low voltage transformer **218** takes off low voltage current from the primary winding thereof, thereby energizing relay **220**. Energization of relay **220** causes it to close the contact points **222** so that the line they connect substitutes and takes over after the momentary action of said push button and its release by the player, and to close the pin-sweeper switch **202**, placing motor **26** in operation. Just before speed reducer shaft **24** of motor **26** has completed a revolution to move the pin-sweeper across the alley bed and back to its resting position along the kickback (Fig. 13), cam **224** will be brought momentarily to bear on the electrical contact of normally closed microswitch **208**, mechanically opening said microswitch, and thereby opening the portion of the circuit taking current from transformer **218**, and opening switch **202**, to stop the motor **26**. At the time cam **224** makes this mechanical contact, cam **226** will likewise be brought to bear momentarily on the electrical contact of normaly open microswitch **210**, mechanically closing it to initiate current take-off from the motor circuit through transformer **228**.

By the time the shaft 24 has stopped rotating the cams **224** and **226** will have moved out of mechanical contact with the contact arms of the microswitches **208** and **210** due to over-ride or lag of the motor **26** and will have resumed their starting positions, as shown in Fig. 12, and usually closed microswitch **208** will again be closed, to close the circuit to the open push-button contacts, and normaly open microswitch **210** will again be open. The momentary closing of normally open microswitch **210** by cam **226** brings about the starting of the motor for the pin-setter **124**, in that the secondary winding of low voltage transformer **228** takes off a low voltage current to energize a relay **230**. Energization of relay **230** causes it to close contact points **232**, so that the line they connect substitutes and takes over after the momentary closing of normally open microswitch **210** by cam **226** on its return to starting position, and causes it to close pin-setter switch **204** to start the pin-setter motor **180**.

As soon as motor **180** starts its speed reducer discharge shaft **181** rotating, cam **234** mounted on that shaft immediately moves out of mechanical contact with the contact arm of normally open microswitch **214**, which in stationary or starting position it holds closed, releasing it to open that microswitch and thereby open that portion of the push-button circuit so that the pin-sweeper cannot be started again by pushing of the push button **216** until microswitch **214** is again closed by cam **234** returning

to its starting position upon completion of the pin-setting operation.

Just before completion of the pin-setting operation, cam 236, also mounted on discharge shaft 181 of motor 180, momentarily bears on the contact arm of normally closed microswitch 212, causing the contact arm to open the microswitch, and thereby the pin-setter operating circuit, to stop the motor 180 (Fig. 14). By the time the speed reducer discharge shaft 181 has ceased rotating, the cams, due to lag or over-ride of the motor 180, will have returned to their starting position (Fig. 12), with normally closed microswitch 212 closed to complete the pin-setter operating circuit to the normally open microswitch 210, and with normally open microswitch 214 closed to complete the circuit to the push button 216 so that pressure on the push button once again is capable of initiating the sequential operations of the pin-sweeper and pin-setter.

It will be seen that the pin-setter operating circuit is in effect a "pin-sweeper safety" circuit since it is operable only after the pin-sweeper has ceased operating, and once in operation, prevents operation of the pin-sweeper until it has accomplished the operation of the pin-setter.

In the use of the above described embodiment of the invention in bowling, the main switch 206 is closed. This actuates motors 34 and 102 and sets in motion the pit belts and the conveyors. Now the player upon completion of a frame or when he otherwise desires the pins to be reset, may press the push button 216 to actuate in sequence motors 26 and 180 to set in motion the pin-sweeper and after it has cleared the alley and while the balls and pins in the pit are being conveyed to their places of discharge, to set in motion the pin-setter. This embodiment may be so regulated in operation that the alley may be reset with pins within a relatively few seconds from the time the push button was pressed by the player.

It will be understood of course that various modifications may be made in the pin-setting device all within the scope of this invention.

Having described my invention, what I claim as new and desire to secure by Letters Patent of the United States is:

1. In a pin-setting device for a bowling alley by which the alley bed is cleared of balls and pins remaining after a play and pins are reset on the pin spots for subsequent play, in combination, a pin magazine arranged to receive pins in stations spaced in pin-setting pattern, the front and rear walls of the magazine at said stations being apertured to permit pins to be removed lengthwise therefrom, a pin-punch arranged to engage pins disposed in said stations through the apertures at the rear of the magazine and to punch the pins forwardly through apertures at the front of the magazine, said pin-punch including a frame upon which punches are mounted to project forwardly therefrom in positions corresponding to the pin-station apertures, said pin-punch being supported for movement longitudinally of the pin stations, a pin-setter arranged to receive a set of punched pins and to deposit them on their respective pin spots on the alley bed in playing position and to leave them and to return to pin-receiving position, means associated with the pin-punch and pin-setter and arranged to move the pin-punch forwardly toward the pin-setter when the pin-setter is disposed adjacent to the magazine in pin-receiving position and to move the pin-punch rearwardly out of the stations when the pin-setter moves toward pin-setting position, and means for actuating the pin-setter.

2. In a pin-setting device for a bowling alley, in combination, a pin magazine arranged to receive pins in stations spaced in pin-setting pattern, the forward and rear walls of the magazine at said stations being apertured to permit pins to be removed lengthwise therefrom, a pin-punch movable longitudinally of the pin stations and arranged to engage pins disposed in said stations through the apertures at the rear of the magazine and to punch said pins forwardly through apertures at the front of the magazine, a pin-setter mounted for travel between a lower terminus adjacent to an alley bed and an upper terminus adjacent to the forward wall of said magazine and arranged to receive a set of punched pins at said upper terminus and to deposit them at said lower terminus, said pin-setter carrying releasable means for clamping pins therein, means associated with the pin-punch and pin-setter and arranged to move the pin-punch forwardly toward the pin-setter when the pin-setter is disposed adjacent to the magazine in pin-receiving position and to move the pin-punch rearwardly away from the pin-setter when the pin-setter moves toward its lower terminus, and means for actuating the clamping means when the pin-setter has received a set of pins at its upper terminus and for releasing the clamping means when the pin-setter has reached its lower terminus.

References Cited in the file of this patent

UNITED STATES PATENTS

644,546	Crawford	Feb. 27, 1900
1,297,951	Wheeler	Mar. 18, 1919
2,310,218	Davis	Feb. 9, 1943
2,319,925	Flanagan	May 25, 1943
2,341,475	Parra et al.	Feb. 8, 1944
2,388,708	Bates	Nov. 13, 1945
2,411,348	Turner	Nov. 19, 1946
2,498,587	Snyder	Feb. 21, 1950
2,514,457	Schmidt	July 11, 1950
2,518,457	Fretter	Aug. 15, 1950
2,547,203	Goff	Apr. 3, 1951
2,586,697	Nejedly et al.	Feb. 19, 1952
2,707,636	Wells	May 3, 1955