G. L. OSGOOD.

COLLAR POUCH.

APPLICATION FILED SEPT. 22, 1917.

1,261,846.

Patented Apr. 9, 1918.

FIG. 1.

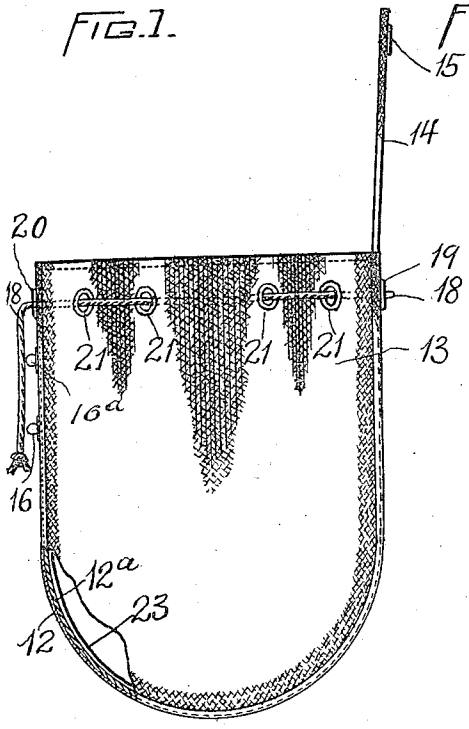

FIG. 2.

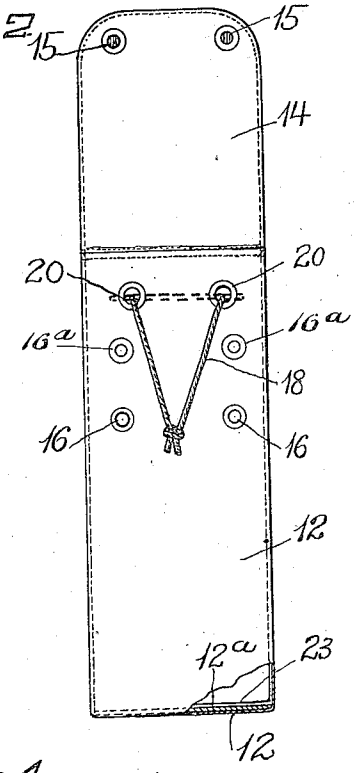

FIG. 3.

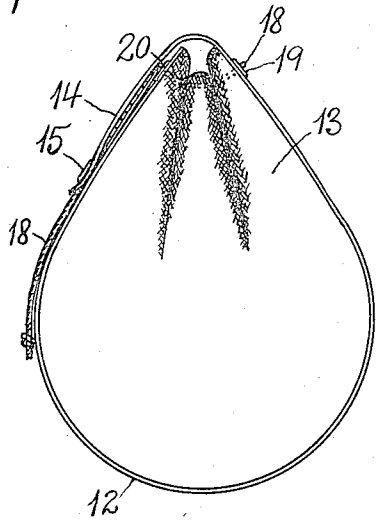

FIG. 4.

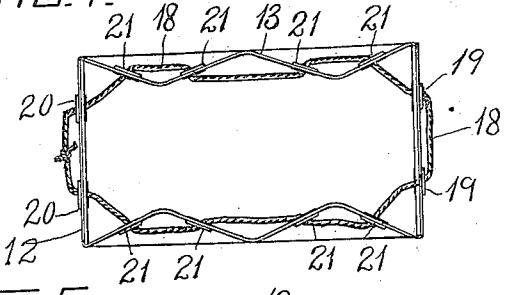

FIG. 5.

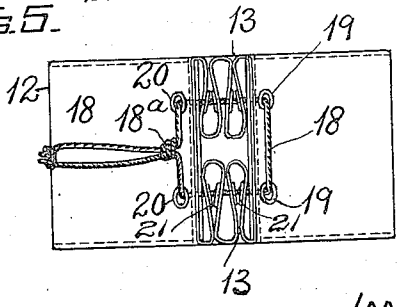

INVENTOR

G. L. Osgood

by Wright Brown Quinby & May

ATTYS.

UNITED STATES PATENT OFFICE.

GEORGE LEWIS OSGOOD, OF AYER, MASSACHUSETTS.

COLLAR-POUCH.

1,261,846. Specification of Letters Patent. Patented Apr. 9, 1918.

Application filed September 22, 1917. Serial No. 192,706.

To all whom it may concern:

Be it known that I, GEORGE LEWIS OSGOOD, a citizen of the United States, residing at Ayer, in the county of Middlesex and State of Massachusetts, have invented new and useful Improvements in Collar-Pouches, of which the following is a specification.

This invention has for its object to provide a holder for laundried collars, adapted to securely confine curved collars in a compact bundle, and to be stored in a drawer, traveling bag, or other receptacle, without occupying unnecessary space.

The invention is embodied in the improvements which I will now proceed to describe and claim.

Of the accompanying drawings forming a part of this specification,—

Figure 1 is a side view of a collar pouch embodying the invention, the pouch being opened.

Fig. 2 is an edge view of the same.

Fig. 3 is a side view showing the pouch closed.

Fig. 4 is a top view showing the pouch opened, the flap and lining hereinafter referred to being removed.

Fig. 5 is a top view of the pouch as shown by Fig. 4, the pouch being closed.

The same reference characters indicate the same parts in all of the figures.

My improved pouch includes an elongated U-shaped body strip which is flexible, so that its ends may be drawn toward each other to close the pouch, as indicated by Fig. 3, and separated to open the pouch, as indicated by Fig. 1. The body strip is preferably stiffer than the side pieces hereinafter described, so that it offers suitable resistance to pressure tending to bend it crosswise. I prefer to make the body strip of at least two layers 12 and 12^a, the external layer 12 being of any suitable material, such as thin cloth or leather, and the internal layer 12^a being preferably of a stiffer material, such as buckram, which may be treated with a stiffening composition.

The body strip is somewhat wider than the collars, and its relative stiffness enables it to aid in resisting pressure tending to bend it crosswise.

To the opposite edges of the body strip are stitched the side pieces 13, each of which is a piece of flexible material, such as cloth or thin leather, the side pieces being preferably more flexible than the body strip.

Each side piece has substantially straight and parallel edge portions, and an intermediate arcuate edge portion. The body strip has parallel longitudinal edges which are stitched to the said edges of the side pieces, so that when the mouth portion of the pouch is expanded, and the side pieces are substantially flat, the body strip, confined by the side pieces, has an arcuate central portion and end portions which are substantially straight and parallel with each other. The arcuate central portion of the body strip is adapted to conform to a portion of the periphery of a roll composed of a starched collar or collars. The parallel end portions of the body strip projecting above said arcuate portion are adapted to limit the expansion of said roll, so that the ends of the collars are not liable to spring upward into the mouth portion of the pouch. A roll of collars compactly formed before insertion into the pouch is retained, therefore, in substantially the same compact form by the parallel end portions of the body strip while the mouth portion of the pouch is being closed upon said roll, as hereinafter described.

The upper edge portion of each side piece is creased so that when the pouch is open, the upper edges of the side pieces have the zig-zag formation shown by Fig. 4, and are prepared for conversion into the bellows folds, shown by Fig. 5, by the operation of drawing the ends of the body strip toward each other. This operation, therefore, closes the mouth of the pouch upon a roll of collars, the displacement of the side pieces being inward so that the width of the pouch is not increased by the operation of closing its mouth.

I provide means for detachably connecting the end portions of the body strip to hold the mouth closed, said means being preferably embodied in a flexible flap 14 attached to one end of the body strip and provided with socket members 15 of ordinary snap fasteners, and stud members 16 of said fasteners attached to the body strip near the end opposite that to which the flap is attached. The socket members 15 are adapted to engage the stud members 16 and thus confine the pouch in the conditions shown by Fig. 3.

The pouch may be conveniently closed by a draw-string 18 bearing on one end portion of the body strip, and passing through a pair of eyelets 19 at said end, a pair of eyelets 20

at the opposite end of the body strip, and eyelets 21 arranged in pairs at the upper edge portions of the side pieces. Portions of the draw-string are extended from the end portion of the body strip having the eyelets 20, and are adapted to be grasped and pulled by the operator. The arrangement of the eyelets and string is such that when the extended portion of the string is pulled upwardly from the position shown by Fig. 1, the end portions of the body strip are drawn toward each other and bellows folds are formed in the upper edge portions of the side pieces, as shown by Fig. 5.

The draw string may be knotted or tied as at 18ª, Fig. 5, to hold the pouch closed, so that the flap 14 may be dispensed with. I prefer, however, to employ both the draw-string and flap, the string being employed to close the mouth of the pouch and its extended portion left loose and partly covered by the flap, and confined between the fastening members, as shown by Fig. 3, said members being spaced apart to permit said extended portion to depend and be confined between them.

The pouch may be provided with a lining 23 of suitable fabric such as silk, formed as a bag stitched at its mouth to the mouth of the pouch and hanging loosely within the pouch. To avoid confusion, the lining is omitted from Figs. 4 and 5.

Additional stud members 16ª may be provided between the members 16 and the adjacent end of the body strip to engage the members 15 on the flap, when the pouch is filled to substantially its maximum capacity.

The end portions of the body strip constitute relatively stiff parallel guides adapted to direct a roll of collars to a bearing on the arcuate central portion of the body strip, when the mouth of the pouch is expanded, and relatively stiff roll-confining members adapted to hold the roll against the said arcuate portion, when the mouth of the pouch is contracted.

The body strip 12 forms the bottom of the pouch and its end portions form two opposed relatively narrow pouch walls. The side pieces 13 form two opposed wider walls. the upper ends of said walls form an oblong mouth, permitting the convenient insertion of a roll of collars, said mouth being normally held open by the stiffness of the body strip. The depth of the pouch from mouth to bottom is greater than the length of the mouth, so that the upper portion of a roll deposited on said bottom is below the mouth. Provision is therefore made for contracting the mouth by inclining the end portions of the body strip toward each other. This operation causes the formation of the inwardly projecting bellows folds on the creased upper portions of the side pieces, as indicated by Fig. 5, said folds being wholly between the end portions of the body strip, so that they are protected against wear by chafing contact with other articles in a bag in which the pouch may be placed.

I claim:

A collar pouch having an expansible and contractible mouth portion, said pouch comprising flexible side pieces having substantially straight and parallel edge portions and intermediate arcuate edge portions, a relatively stiff body strip having parallel edges united to and confined by the side pieces, so that the said strip has an arcuate central portion and end portions which are substantially straight and parallel with each other when the mouth portion is expanded, whereby the body strip is adapted to prevent the unrolling of a roll of collars resting on said central portion, the upper edge portions of the side pieces being creased to form bellows folds when the mouth portion is contracted, the body strip being provided at each of its end portions with a pair of eyelets, and the upper edge portions of the side pieces being provided with rows of eyelets, a draw-string bearing on one end portion of the body strip and passing through said eyelets, portions of said string being extended outwardly from the opposite end of the body strip and adapted to be manipulated to draw the end portions of the body strip toward each other and contract the mouth portion of the pouch, and a flap attached to one end of the body strip, the free end of said flap and the opposite end portion of the strip being provided with pairs of spaced apart complemental fastening members whereby the flap may be caused to connect the end portions of the body strip and maintain the contraction of the mouth portion of the pouch, the extended portions of the draw-string being adapted to depend between said fastening members when the mouth portion is contracted.

In testimony whereof I have affixed my signature.

GEORGE LEWIS OSGOOD.

Copies of this patent may be obtained for five cents each, by addressing the "Commissioner of Patents, Washington, D. C."