Sept. 27, 1932. J. NEALE 1,880,149

SYSTEM OF RAILWAY CONTROL AND SIGNALING

Filed May 29, 1929 2 Sheets-Sheet 1

Fig. 1.

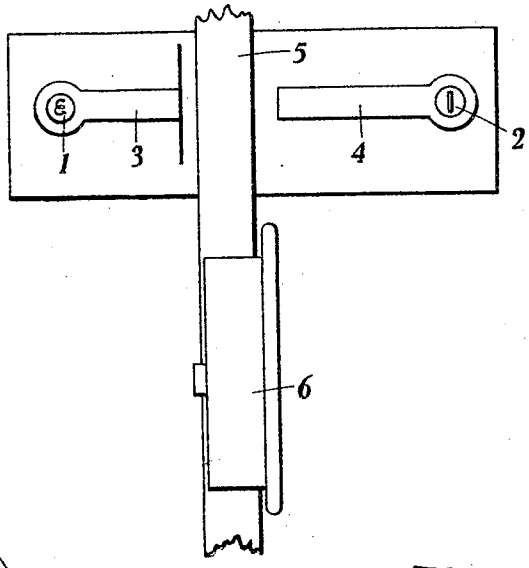


Fig. 2.

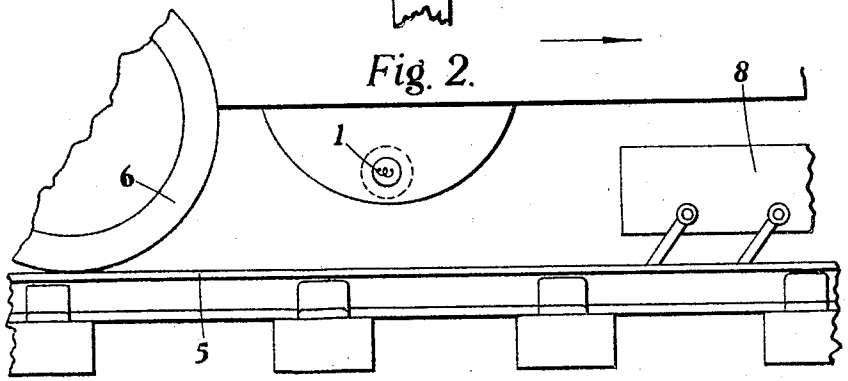


Fig. 3.

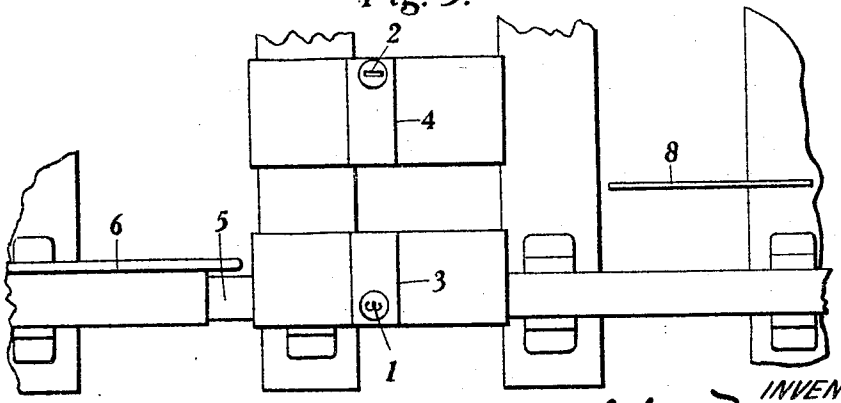


INVENTOR

John Neale

BY

Richard E. Babcock

ATTORNEY

Sept. 27, 1932. J. NEALE 1,880,149

SYSTEM OF RAILWAY CONTROL AND SIGNALING

Filed May 29, 1929 2 Sheets-Sheet 2

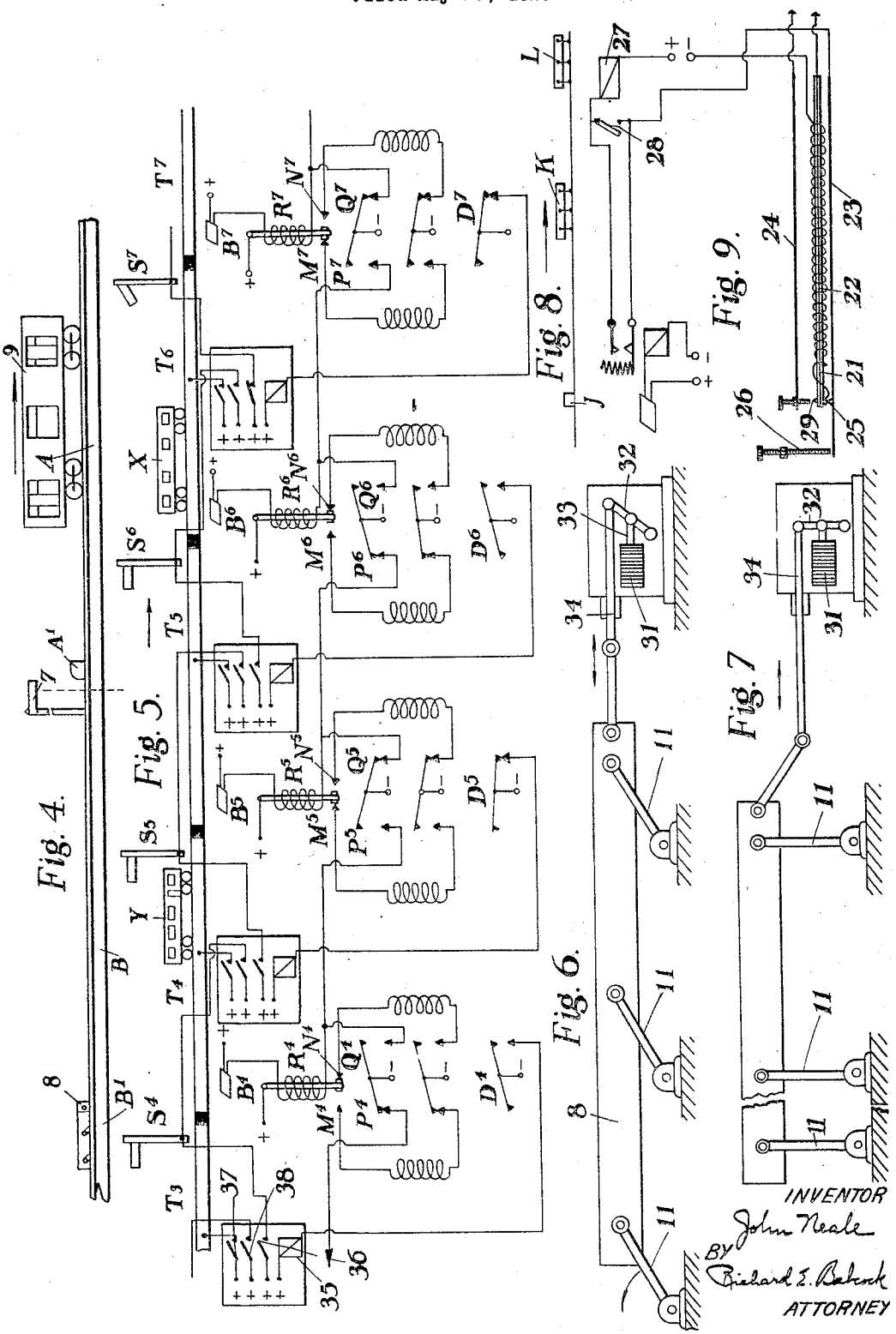

Patented Sept. 27, 1932

1,880,149

# UNITED STATES PATENT OFFICE

JOHN NEALE, OF ST. JOHN'S WOOD, LONDON, ENGLAND

## SYSTEM OF RAILWAY CONTROL AND SIGNALING

Application filed May 29, 1929, Serial No. 366,995, and in Great Britain May 31, 1928.

This invention relates to an improved system of railway control and signaling, such systems having for its object to avoid the necessity for positive mechanical or electrical contact between a moving vehicle and some stationary device by which the passage of a train operates any desired mechanism.

Such contact systems at present in general use suffer from the obvious disadvantages, of danger of fracture incurred by any stationary trip mechanism being engaged by fast moving traffic, and by the fact that dirt, damp and corrosion quickly affect the mechanical efficiency of such devices.

The object of the present invention is to replace any such system by one which is dependent for its action upon the interruption of an intangible element such as a beam of light and which thereby avoids mechanical troubles such as are detailed above.

According to the present invention I provide, inter alia, light-sensitive devices so mounted and arranged that they are normally illuminated each by its own source of light, and shielded against the intrusion of other interfering illumination, such as daylight. Hereinafter I shall refer to the combination of the light-sensitive device and its illuminant as an electrical light-sensitive unit.

Further I provide light-obscuring means to co-operate with the electric light-sensitive unit, whereby under certain circumstances on relative movement taking place between them, the beam of light passing from the illuminant to the light-sensitive device can be interrupted. This interruption will electrically affect the light-sensitive device, the consequent change being applied through the interposition of a suitable relay device to effect some control and/or signaling function. The obscuring device may take the form of a stationary or adjustable knife blade, or may actually be a portion of the train itself, such as the flange of a wheel.

It is obvious that the electric-light-sensitive unit, may be mounted stationary on the track and the interruption of the beam accomplished by a blade mounted upon the train or by a portion of the train itself, or alternatively the electric-light-sensitive unit may be mounted on the train, and the interruption of the beam accomplished by its passage across a stationary or adjustable blade mounted upon the track. I propose in general to use the former arrangement, that is, a stationary electric-light-sensitive unit affected preferably by the passage of the wheel flange, for operating signals, points, detonators, indicators or the like, and the latter arrangement, that is to say, a moving electric-light-sensitive unit upon the train travelling across a stationary blade to operate the brakes, indicators and other apparatus on the train. I may further according to the invention, provide means whereby while a signal is set at the danger or "on" position, a movable blade adjacent the signal, and on the track, serves as described, to stop any train if the driver has not observed that the signal is against him, but if the signal is at the "clear" or "off" position the blade will be in such a position that it will not interrupt the beam of the electric light-sensitive unit of a train passing over it.

Again according to the invention, I interconnect the signals in such a manner that a train passing into one section of track causes a signal at any entrance to that section to be set at "danger", said signal being only reset to "clear" by the train passing out of the section. As applied to electrified railways, similar means may be provided to cut off the traction current from a section in a manner hereinafter described.

It will be seen that in the event of failure of any of the units such as a lamp or light-sensitive device due to breakage, or in the event of a breakage occurring in the wiring, either light will cease to fall upon the light-sensitive device or current will cease to flow through it. Should this occur in a track electric-light-sensitive unit the signal will be set at "danger" or should it occur in a train unit the brakes will be applied. Thus any failure will operate positive safety measures as the train of course cannot pass a signal set at "danger" as explained above. It may also provide that points, point locking devices and signals with their safety blades

or locking bars may be operated in like manner, as also fog signals which may be operated by the passage of the train.

Further in connection with the new system I provide on the track at one point an electric-light-sensitive unit and at a second point a known distance therefrom, a pivoted blade similar to those previously mentioned, actuated by the passage of the train past the above mentioned electric-light-sensitive unit, in such manner that after a pre-determined time the blade is rendered inoperative. The action of this device is such, that a train passing the first point causes the blade at the second point to drop, for instance, so many seconds later. Should the train, owing to excess of speed arrive at the second point before the blade drops, the brakes are applied, but if it arrives later its passage is not checked.

By suitably determining the distance between the two points and the time allowed to elapse before the blade drops, it is obvious that a maximum speed for the train can be determined, above which the brakes are applied. This system can be extended to more than two points by means of which a fixed minimum deceleration of the train can be assured and the light-sensitive devices may be differently arranged if necessary such as by placing lamps at the second and subsequent points to influence light-sensitive devices upon the train.

The invention will now be described by way of example only, with reference to the accompanying drawings, in which:—

Fig. 1 is a plan view of an electric-light-sensitive track unit showing a portion of the rails and a flanged wheel upon one rail.

Fig. 2 is a side elevation of an electric-light-sensitive train unit showing a portion of one rail and an obscuring blade.

Fig. 3 is a plan view corresponding to Fig. 2.

Fig. 4 is a portion of two adjacent rail sections in a "block" system of railway working.

Fig. 5 is a diagrammatic view showing five sections of an electrified "block" system as applied to electric traction.

Figs. 6 and 7 are detailed views of one form of adjustable obscuring blade in inoperative and operative positions respectively.

Fig. 8 is a section of track showing an electric-light-sensitive track unit acting in combination with two speed check blades as described hereinafter.

Fig. 9 shows a delayed-action device for timing the dropping of the check blades shown in Fig. 6.

Referring to the drawings, I provide an electric-light-sensitive unit consisting in all cases of a lamp 1 and a light-sensitive device 2 which is preferably a selenium bridge of the type described and claimed in my British specification No. 284,942. The lamp 1 and the light-sensitive bridge 2 are provided with shields consisting of tubes 3 and 4, so arranged and of such length that the beam of light from the lamp 1 is concentrated upon the bridge 2 and exterior light is excluded. In Fig. 1 which shows the application of the invention on the track of a railway, 5 represents a portion of rail and 6 is a flanged wheel of a vehicle running upon the track. It is clear that the wheel in its motion will interrupt the beam of light passing from the lamp 1 to the bridge 2, thereby increasing the electrical resistance of the bridge and operating means such as a relay (not shown) by which a signal 7′ such as is shown in Figure 4 may be operated.

In Figs. 2 and 3 the electric light-sensitive unit is shown mounted upon the moving vehicle, a light-obscuring means such as a blade 8 being provided stationed upon the track. The interruption of the beam of light by the blade 8 in the passage of the vehicle past it, will affect the light-sensitive bridge 2, the change in electrical resistance of the latter causing the brakes or other mechanism on the vehicle to be operated through suitable relay means.

In Fig. 4 is illustrated somewhat diagrammatically the working of the system according to the invention, as applied to other than electric traction. The train 9 has just passed the electric light-sensitive unit A′ which has set the signal 7′ at "danger" which has, in turn, for example by suitable link-work erected the safety blade 8 at B′. Thus until the train passes out of the section A when it resets or allows of the resetting of the signal 7′ and blade 8 to "clear" by passing the next electric-light-sensitive unit situated at the entrance to the next section (as is more fully described with reference to electric traction as shown in Fig. 5), no train can pass from section B to section A by reason of the adverse signal and blade position. It will be understood that the brakes after application are taken off by the driver, after which operation the brakes can again be applied by the system in the manner described.

Referring to Fig. 5 of the drawings, this shows diagrammatically the general circuit arrangement for signaling and track current control for five sections of electrified track marked 3, 4, 5, 6 and 7. The signals at the commencement of these sections 4, 5, 6 and 7 are marked S4, S5, S6, S7 respectively. The electric light-sensitive units at the commencement of each section 4, 5, 6 and 7 are indicated by B4, B5, B6 and B7 respectively, and they control sensitive relays marked R4, R5, R6 and R7. The relay contacts are indicated by M4, N4, M5, N5, and so forth, and they control tripping and holding contacts P4, Q4, P5, Q5 etc. respectively. Circuit breakers indicated diagrammatically at C3, C4, C5, C6

are controlled by local circuit switches or contactor systems D4, D5, D6, D7, which are controlled by coils U4, V4, U5, V5, U6, V6, U7, V7, controlled by the relays R4, R5, R6, R7, and serve to control the passage of current to the track sections 3, 4, 5 and 6 and to the mechanism for operating the signals S4, S5, S6 and S7 respectively. Trains X and Y are shown respectively on sections 4 and 6.

The operation of the system is as follows:—

Assuming that a train Y is moving to the right from section 4 to section 5 and that the signal S5 is at "clear", the relay R5 being in its normal position as shown with contacts M5 closed and N5 open. The circuit breaker is consequently closed and as the coil U5 upholds the contactor system D5 closed current is supplied to section 4. Now when the train Y passes bridge B5 the armature of the relay R5 is released and contact M5 is opened and contact N5 is closed, closing the circuit of coil V5 and consequently causing contactor system D5 to throw over and open the circuit of the circuit breaker C4 thus interrupting the passage of current to section 4 and putting signal S5 to "danger". At the same time it opens the contacts Q5 thus breaking the circuit for the bridge B5 and relay circuit for B6 and R6. This circuit will remain broken until the train Y has proceeded to the next section 6 when the relay R6 will be released and will cause the contacts Q6 to be broken and P6 closed thus making an alternative circuit for the current through the bridge B5 and relay R6 thus throwing this relay back to normal position. If however, the signal, S5 had been set at "danger", and the train Y should run past this signal for any reason, it will immediately be brought to a standstill by coming onto section which is dead. This result is obtained by reason of the fact of the train X in section 6. In entering this section the train X has opened the circuit breaker C5 by closing the contact N6 of coil V6 thus throwing the contactor system D6 into the position shown. The train X in moving from section 6 to section 7 past the signal S7, which is at "clear", passes the bridge B7 thus actuating the relay R7 and causing contact Q7 to open and P7 to close thus making an alternative circuit for the current through the bridge B5 and relay R7 whereby this relay is returned to its normal position.

It will be seen that provision is made in the system for setting two signals behind any train at "danger", that is to say, the signal at the beginning of the section which the train has just left and the signal at the beginning of the section which the train has entered and in which it is running.

If the circuits are arranged as in Fig. 5 it is important in fixing the position of the electric-light-sensitive units, that they are placed at such a distance after the commencement of the section that in the event of the section being dead, any train entering this dead section is stopped before arriving at the electric light-sensitive unit, or else the track light-sensitive unit is operated in the same manner as if the section were supplied with current.

It is obvious that where steam traction is concerned, the circuits described for controlling the driving current in the section are not required, and the question of the number of sections behind a train to which admittance is barred by signal is optional.

In Figs. 6 and 7 is shown one form of an adjustable blade 8 carried by parallel-motion links 11 and operated by suitable link work from the signal arm 7', the arrangement being such that when the signal arm is at "danger" the blade 8 is raised into the operative position (shown in Fig. 7). In this position it is adapted to interrupt the beam of light of the electric-light-sensitive unit upon a passing vehicle and thus as described above, cause the actuation of brakes and/or warning means thereon.

In Fig. 8 is shown a method of checking the speed of the vehicle on dangerous curves, when passing through junctions or the like, still employing the means according to the invention. At J is situated an electric-light-sensitive unit controlling blades at K and L of the kind described with reference to Figs. 6 and 7. These are held normally in the operative position. The passage of the train past J causes them to fall at pre-determined times by means of delayed action devices, a possible form of which is shown in Figure 9. If the train arrives before these blades fall the brakes thereof are applied as if a signal at danger were encountered. In the device shown I provide a bi-metallic strip 11 surrounded by a heating coil 12 and located between spring leaf contacts 13 and 14. In the normal position of the apparatus the bi-metallic strip makes contact at 15 with the leaf 13, the latter being held away from its normal position in contact with the strip 16 by the strength of the bimetallic strip. At 17 there is diagrammatically indicated a locking relay which is energized by the momentary passage of current caused by the passage of a train. For this purpose a light-sensitive unit J (see Fig. 8) is arranged on that track in a similar manner to the units B. This unit J is included in the circuit of the contacts 18 and when a train passes the unit J the contacts 18 are closed and thus establishing the circuit through the heating coil 12, the contact 15 and blade 13. In this manner the bimetallic strip 11 flexes under the influence of heat towards the leaf 14. The period of delay therefore corresponds with the time elapsing between the first passage of current to close the contacts 18 and lock relay 17 and the heating of the

bi-metallic strip 11 until it touches the blade 14 at contact 19. When the blade 11 contacts with 19 the circuit for actuating the track blades K, L, is closed. The stop 16 serves to limit the movement of the blade 13. Continued movement of the bi-metallic strip due to heating also breaks the contact at 15 before contact is made between 11 and 19 and so releases the locking relay 17. When the coil heating circuit is broken the bi-metallic strip cools and subsequently returns normal thereby breaking contact with the leaf spring 14 at 19 and thus allowing the track blade or blades to return to their normal operative position.

Having now particularly described and ascertained the nature of my said invention, and in what manner the same is to be performed, I declare that what I claim is:—

1. In a railway control and signaling system the combination with train stopping means, of a light-sensitive unit, said light-sensitive unit consisting of a light-sensitive cell and a source of light, light interrupting means, a relay circuit in which said light-sensitive cell is included, time control means controlling said relay circuit, signaling mechanism controlled by said relay circuit, control means arranged at predetermined distances apart along a track, the passage of a vehicle past one of said control points serving to actuate the control means at another point for a limited time only, and control means on said vehicle adapted to be actuated by the control means at the second mentioned point.

2. In a railway control and signaling system the combination with train stopping means, of a light-sensitive unit, said light-sensitive unit consisting of a light-sensitive cell and a source of light, light interrupting means, a relay circuit in which said light-sensitive cell is included, time control means controlling said relay circuit, signaling mechanism controlled by said relay circuit, control means arranged at predetermined distance apart along a track, the passage of a vehicle past one of said control points serving to actuate the control means at another point for a limited time only, and warning signals associated with said relay circuits, said warning signals being adapted to be actuated by the second mentioned control means.

3. In a railway control and signaling system the combination with train stopping means, of a light-sensitive unit, said light-sensitive unit consisting of a light-sensitive cell and a source of light, light interrupting means, a relay circuit in which said light-sensitive cell is included, time control means controlling said relay circuit, signaling mechanism controlled by said relay circuit, an electric light-sensitive unit positioned at a predetermined point along a track, a delay action device located at another point of the track, an obscuring blade at the same point as the said delay action device, and relay means interposed between said delay action device and said blade.

4. In a railway control and signaling system the combination with train stopping means, of a light-sensitive unit, said light-sensitive unit consisting of a light-sensitive cell and a source of light, light interrupting means, a relay circuit in which said light-sensitive cell is included, time control means controlling said relay circuit, signaling mechanism controlled by said relay circuit, control means arranged at predetermined distances apart along a track, one of the said control means including a light-sensitive unit, the control means at the other points including a delay action device, obscuring blades at each of said other points, and relay circuits between said delay action devices and their associated obscuring blades.

5. In a railway control and signaling system the combination with train stopping means, of a light-sensitive unit, said light-sensitive unit consisting of a light-sensitive cell and a source of light, light interrupting means, a relay circuit in which said light-sensitive cell is included, time control means controlling said relay circuit, signaling mechanism controlled by said relay circuit, control means arranged at predetermined distances apart along a track, one of said control means including an electric light-sensitive unit, the control means at the other point including a delay action device, said delay action device consisting of a heating coil circuit, a bi-metallic strip included in said heating circuit, a plurality of obscuring blades associated one with each of said control means at the other points, operating circuits for said blades, said bi-metallic strip being adapted to close the operating circuit of said obscuring blades after a predetermined period of time when heated and subsequently to break the heating coil circuit and finally the blade operating circuit.

6. A railway control and signaling system comprising a plurality of track sections, a plurality of signals arranged one at the beginning of each of said sections, a plurality of contactor systems, one of said contactor systems appertaining to each of said track sections and each of said signals, a plurality of relay circuits, one of each of said relay circuits being associated with each contactor system, a light-sensitive cell included in each of said relay circuits, and a plurality of circuit breakers associated one with each contactor system, the arrangement being such that on the failure of the illumination of the light-sensitive cell of any one relay circuit its relay circuit actuates the corresponding contactor system which in turn actuates the circuit breaker whereby the supply of current to the corresponding track section is interrupted

and at the same time the corresponding signal is set at danger.

7. A railway control and signaling system comprising a plurality of track sections, a plurality of signals arranged one at the beginning of each section, a plurality of relay circuits one associated with each track section, each of said relay circuits including a light-sensitive cell, means for constantly illuminating said cell, a plurality of contactor systems associated one with each relay circuit, a plurality of circuit breakers associated one with each of said contactor systems, each of said relay circuits having a connection to a contact of the contactor system of the next track section, the arrangement being such that a vehicle in passing a light-sensitive cell obscures the light therefrom whereby its relay circuit actuates the corresponding contactor system in such a manner as to operate circuit breakers whereby supply of current to the track section immediately behind the track section on to which the vehicle has passed is interrupted whilst the signals at the beginning of both of these sections are at danger.

In testimony whereof, I have signed my name to this specification at London, England, this 29th day of April, 1929.

JOHN NEALE.