May 31, 1938. G. W. VON HOFE 2,119,371

MACHINE FOR APPLYING LABELS

Filed July 16, 1936 3 Sheets-Sheet 1

Fig. 1.

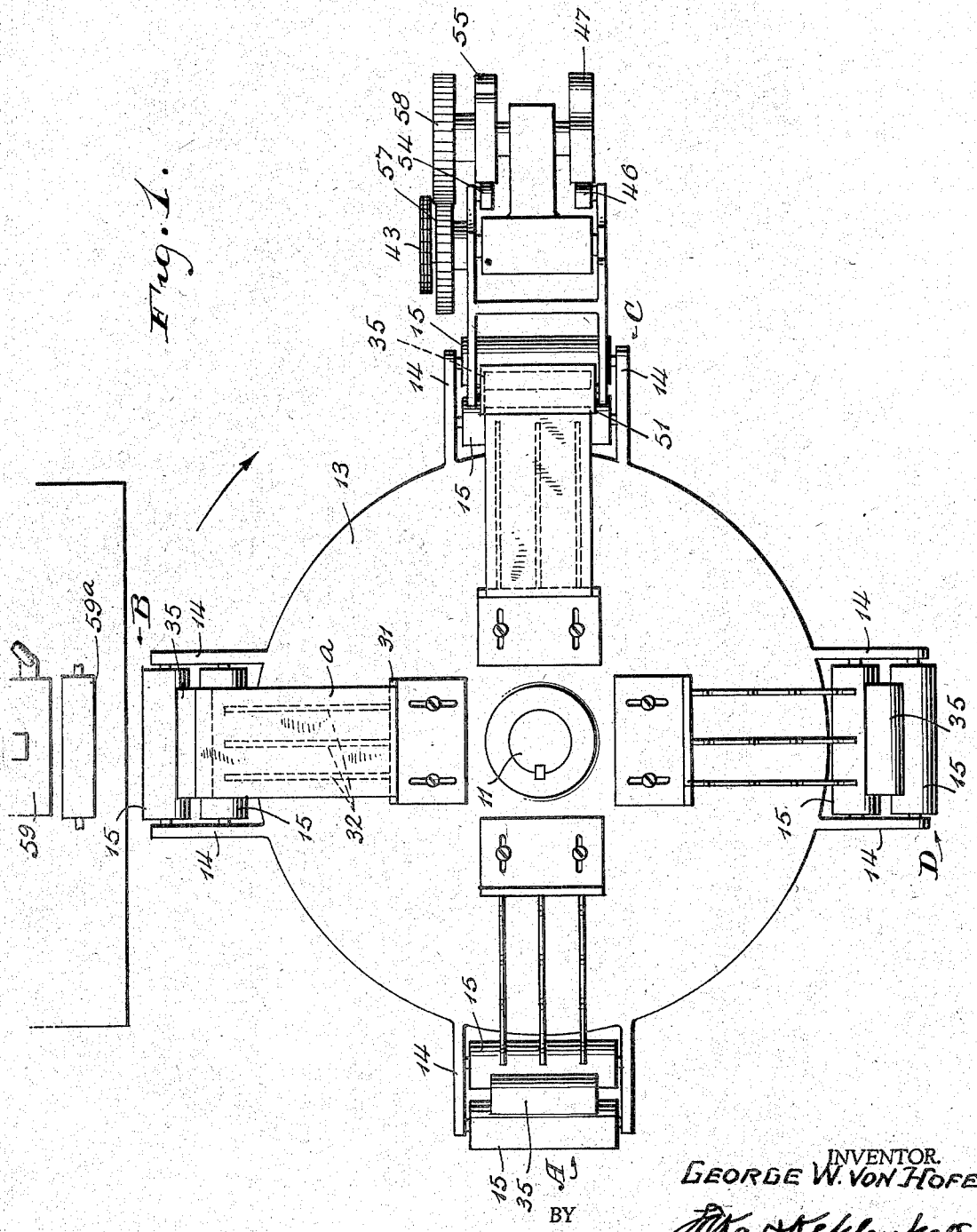

INVENTOR.
GEORGE W. VON HOFE
BY
ATTORNEY.

May 31, 1938. G. W. VON HOFE 2,119,371

MACHINE FOR APPLYING LABELS

Filed July 16, 1936 3 Sheets-Sheet 2

Fig. 2.

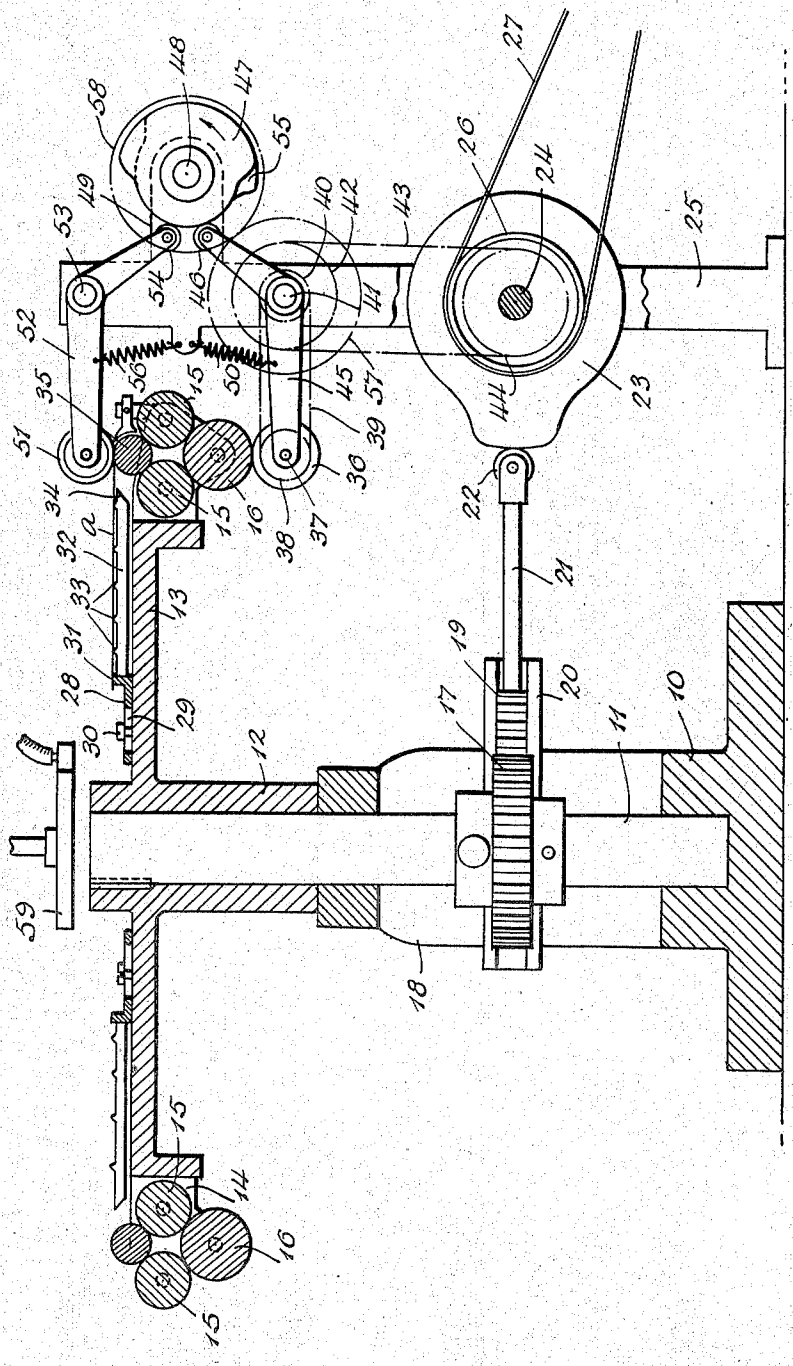

INVENTOR.
GEORGE W. VON HOFE

BY Fitka & Hecklenbeck
ATTORNEYS.

May 31, 1938. G. W. VON HOFE 2,119,371

MACHINE FOR APPLYING LABELS

Filed July 16, 1936 3 Sheets-Sheet 3

Fig. 3.

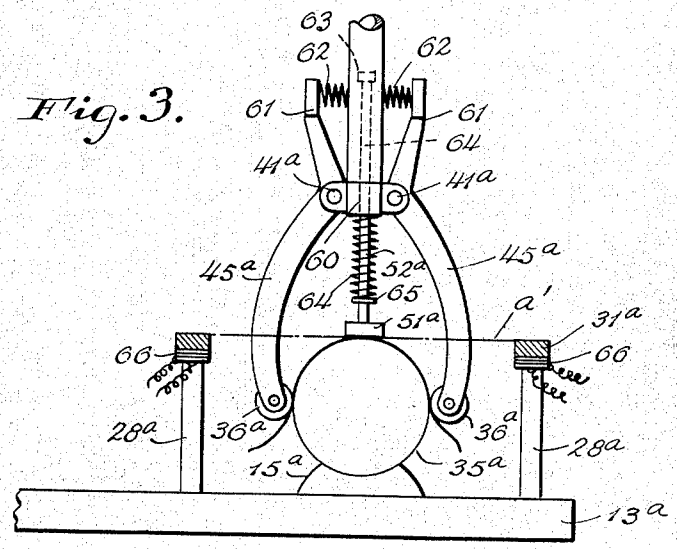

Fig. 4.

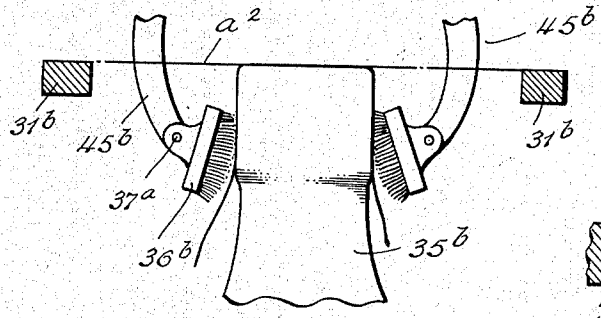

Fig. 5.

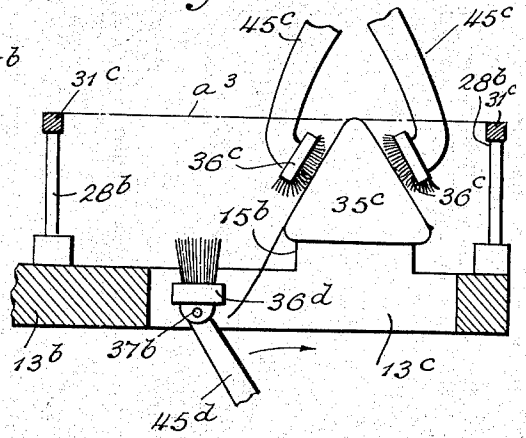

Fig. 7.

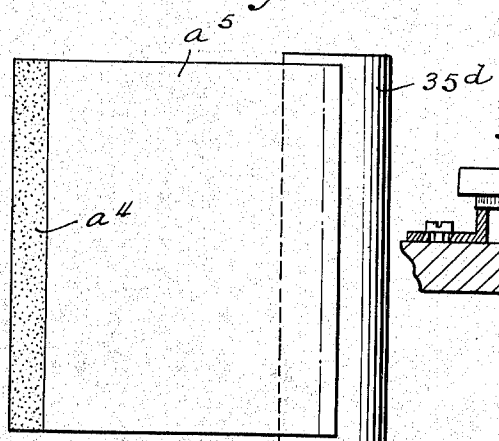

Fig. 6.

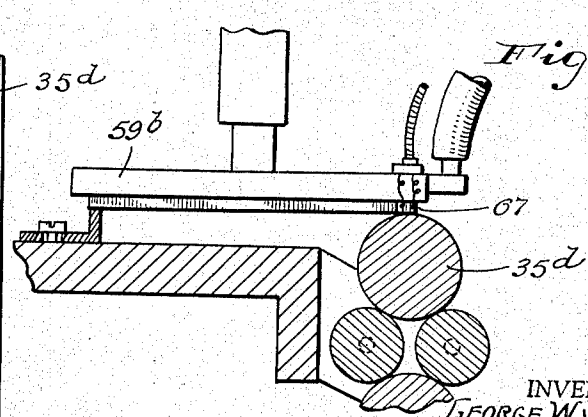

INVENTOR.
GEORGE W. VON HOFE

BY [signature]

ATTORNEYS.

Patented May 31, 1938

2,119,371

UNITED STATES PATENT OFFICE

2,119,371

MACHINE FOR APPLYING LABELS

George W. von Hofe, Bound Brook, N. J., assignor to New Jersey Machine Corporation, Hoboken, N. J., a corporation of New Jersey

Application July 16, 1936, Serial No. 90,921

19 Claims. (Cl. 216—55)

The invention relates to machines for applying labels and the like and more particularly to adhesive coated labels, to the articles or elements for which the labels and the like are designed and has for its object to provide an improved mechanical arrangement whereby the labels and the like subsequent to the application of the adhesive thereto, are supported in a novel manner to facilitate the application of said labels to predetermined articles or elements. The invention contemplates further the provision of simplified means for efficiently applying labels and the like having inherent characteristics, with respect to dimensions, shape and the like, which increase the difficulty of their application. In addition, the invention has for its purpose the provision of novel means for simplifying the application of labels and the like to articles or elements which because of their shape or dimensions or both, or because of the predetermined position of the labels and the like thereon, complicate the applying operations. Other more specific objects will appear from the description hereinafter and the features of novelty will be pointed out in the claims.

In the accompanying drawings, which illustrate examples of the invention without defining its limits, Fig. 1 is a plan view, partly diagrammatic, of the novel machine in a form designed particularly for applying labels or the like to cylindrical articles of relatively small diameter such as small dry batteries; Fig. 2 is a central sectional elevation thereof; Figs. 3, 4 and 5 are fragmentary detail views illustrating other forms of the novel machine; Fig. 6 is a fragmentary detail view showing another form of the machine illustrated in Figs. 1 and 2, and Fig. 7 is a fragmentary plan view of the arrangement shown in Fig. 6.

The machine which is diagrammatically illustrated in Figs. 1 and 2, comprises a supporting frame or pedestal 10 of suitable type and dimensions in which an upright shaft 11 is journalled in any conventional manner; the shaft 11 projects upwardly beyond the frame 10 and is in keyed or equivalent connection with a bearing sleeve 12 which, in the illustrated example, rests upon the upper end portion of the frame 10 for rotation with said shaft 11 as will appear more fully hereinafter. The sleeve 12 carries and preferably comprises an integral part of a movable carrier shown in the form of a horizontal table 13 adapted to be intermittently rotated in a horizontal plane and provided on its peripheral edge with bearing brackets 14 arranged in co-operating pairs at 90° intervals in opposed diametric relation to each other as shown in Fig. 1. Co-operating rollers 15 are journalled in groups of two in spaced parallel relation to each other in each pair of bearing brackets 14, and for convenience of description and identification are hereinafter referred to as wrapping rollers; each two co-operating rollers 15 are rotatively driven in the same direction by suitable driving means which, in the example illustrated, is shown in the form of a driving roller 16 located in surface engagement with the rollers 15 of each pair and itself driven in any convenient manner.

In the operation of the specific form of the machine selected for purposes of description, the shaft 11 and with it the movable carrier or table 13 is rotated intermittently in steps, each of which rotatively advances the table 13 through 90°, so as to shift the wrapping rollers 15 successively to the various operative stations, of which there are four in the illustrated machine. The first of these may be termed the feeding station indicated at A, the second the label applying station B, the third the wrapping station C, and the fourth the ejecting station D; it will be understood that the various station designations are used merely for purposes of description and that they accordingly may vary in accordance with the various operative steps performed thereat or at equivalent stations in other specific types of the novel machine.

Any suitable mechanism may be provided for effecting the intermittent rotation of the table 13 in the desired manner. For instance, as shown in Fig. 2 of the drawings, the shaft 11 at an intermediate point may be provided with a gear wheel 17 fixed upon said shaft 11 in any suitable manner to rotate therewith, it being understood that the illustrated support or pedestal 10 is constructed to accommodate said gear wheel 17 and its associated mechanism as indicated at 18. The gear wheel 17 is arranged in mesh with a rack 19 mounted for horizontal reciprocation in a suitable guide 20 fixed upon the support 10 in any convenient manner; it is to be understood that suitable provision is made so that during its one stroke the rack 19 will rotatively actuate the gear 17 and with it the shaft 11 and table 13, while during its reverse movement the rack 19 will simply develop a recovery stroke without operatively affecting the shaft 11 and table 13; in other words the arrangement is such that each operation of the table 13 is followed by a period of rest during which the operative steps at the various stations A, B, C, and D may be effected.

For the purpose of illustrating the mechanism whereby the rack 19 is reciprocated, said rack is provided with a rod 21 projecting from one end thereof and carrying a roller 22 in rolling engagement with a cam 23 fixed upon a driving shaft 24 journalled in conventional bearings upon an upright frame 25; any conventional means may be provided for maintaining the roller 22 in operative engagement with the cam 23. The latter may be driven as illustrated by means of a pulley 26 mounted upon the shaft 24 and a belt 27 connected with any selected form of driving mechanism such as a motor or the like.

In the novel machine in all of its forms, successive labels are carried by a prime supporting means into adhesive receiving relation with an adhesive applying means, and subsequently to the application of the adhesive are delivered by said prime supporting means to a secondary supporting means with which the machine is provided; the secondary supporting means in cooperation with an article to be labeled by the machine, supports a label in position for application to the article for which it is designed or to put it more specifically, means is included in the machine for detachably supporting at least one end of a previously gummed label, while the latter is in position for application to said article. The machine in question is designed specially for applying labels provided on one surface with a coating of adhesive in the well-known way. In the example of the novel machine illustrated in Figs. 1 and 2, the secondary supporting means referred to above is shown in the form of plates 28 adjustably mounted on the upper face of the table 13 for instance, by means of slots 29 and bolts 30 in spaced registry with each group of rollers 15 and 16, as shown in Fig. 1. The plates 28 are provided with supporting members or upright flanges 31 and with members 32 projecting from said flanges towards the rollers 15 in spaced parallel relation to each other and preferably provided at spaced intervals along their upper edges with projections 33; in the preferred form the free ends of the members 32 may be bevelled as indicated at 34 to avoid interference with the operation of applying the label as will appear more fully hereinafter.

In the form of the machine disclosed in Figs. 1 and 2, the cylindrical article 35 such as for instance a dry battery cell, is rotated about its axis at the wrapping station C for the purpose of wrapping or applying the label circumferentially about the same. To effect this rotation of the article 35, mechanism is provided for rotating the roll 16 which, because of its frictional contact with the rollers 15, correspondingly actuates the latter and thereby in turn rotates the article 35 about its axis. To develop these operations, the machine is provided at the wrapping station C with a driving roller 36 fixed upon a shaft 37 which also carries a pulley 38 connected by means of a belt 39 with a pulley 40 located upon a shaft 41 suitably journalled in the frame 25. The shaft 41 is further provided with a second pulley 42 connected by means of a belt 43 with a pulley 44 fixed upon the previously mentioned drive shaft 24. The shaft 37 is journalled upon one arm of a bell crank lever 45 pivotally mounted on the shaft 41 and having its other arm provided with a roller 46 arranged in engagement with a cam 47 mounted upon a shaft 48. The latter is journalled in brackets 49 fixed upon the frame 25; a spring 50 or its equivalent serves to maintain the roller 46 in operative engagement with the cam 47. The arrangement in addition includes means for preventing the unintentional displacement of the article 35 during the period of application of the label thereto which means may coincidentally function to press the label into engagement with said article 35 during said period of application. In its illustrated form the last named means consists of a pressure roller 51 journalled upon one arm of a bell crank lever 52 which is pivoted at 53 upon the frame 25 and at the free end of its other arm carries a roller 54 arranged in engagement with a cam 55 also fixed upon the previously mentioned shaft 48; if desired, a spring 56 or its equivalent may be provided for maintaining the roller 54 in operative engagement with the cam 55. The operation of the shaft 48 to rotate the cams 47 and 55 may be effected in any suitable manner and as shown, may be brought about by means of a toothed gear 57 on the shaft 41 meshing with a toothed gear 58 on the shaft 48. With the construction described the bell crank levers 45 and 52 will be periodically operated by the cams 47 and 55 to move the rollers 36 and 51 away from each other or in other words, to spread said rollers apart to avoid interference with the intermittent rotation of the table 13 when the application of a label to the article 35 has been completed at station C; the arrangement of the cams 47 and 55 preferably is such that the roller 36 will be moved away from the roller 16 at approximately the same moment that the pressure roller 51 is moved away from the article 35.

The machine further includes any conventional means for bringing successive labels into the applying position at the applying station B, which means may constitute the previously mentioned prime supporting means, and in such case operates to carry the labels into adhesive receiving relation with an adhesive applying means, and subsequently to the application of the adhesive delivers the gummed labels to the secondary supporting means referred to above. Generally, such prime supporting means may include a suitably actuated suction head 59 arranged to remove the terminal label from a stack or other supply of labels and to pass said label over an adhesive applying roll 59a or its equivalent whereby a coating of adhesive or its equivalent is applied to said label and to then carry the adhesive coated or gummed label to the applying position at station B. As the mechanism for transferring individual labels successively from a supply thereof to the adhesive applying means and subsequently to the applying position at station B per se forms no part of the instant invention and as the mechanism in question may be of well-known type, it has not been deemed necessary to illustrate the same in detail.

The machine so far described and illustrated in Figs. 1 and 2 operates as follows: During a rest period of the table 13, one of the articles 35 such as a dry battery cell is deposited upon a given pair of the rollers 15 located at the time at the feeding station A so that said article 35 rests between and in engagement with the two rollers 15 of said given pair thereof. Through the operation of the cam 23, the rack 19, the gear 17 and associated elements, the shaft 11 is given a quarter turn about its axis to thereby move the table 13 rotatively through an arc of 90° whereby the article 35 previously placed upon the rollers 15 is brought to the applying station B. At the same time this actuation of the table 13 brings

a succeeding pair of rollers 15 to the feeding station A in position to receive another of the articles 35 which may be placed in position on said last named rollers 15 during the period of rest which follows these operations. During such succeeding rest period the prime supporting means exemplified by the suction head 59 carries a label into adhesive receiving relation to the adhesive applying roll 59a or its equivalent and subsequently transfers the adhesive coated label *a* to the secondary supporting means or in other words, to the position illustrated at the station B in Fig. 1 in which one end of said label *a* registers with and adhesively engages the upright flange 31 of the plate 28 located at this station at the time, while the other end of said label rests upon the peripheral surface of the article 35 at said station B; the arrangement is such that the opposite ends of the label *a* are adhesively connected with the previously mentioned flange 31 and the article 35 respectively, while the intermediate portions of the label rest upon the projections 33 of the members 32 so as to be supported thereby, it being understood that the adhesive coating of the label *a* is still in a tacky condition at this stage. As soon as the label *a* has thus been placed in position on the secondary supporting means at the station B for application to an article, the table 13 is again rotatably actuated through an arc of 90° to thereby bring the label *a* while in the applying position on said secondary supporting means to the wrapping station C, it being understood that at this time the rollers 36 and 51 are spread apart by the action of the cams 47 and 55 to avoid any interference with this adjustment of the parts. At the proper moment the bell crank levers 45 and 52 are operated to bring the roller 36 into engagement with the roller 16 and the roller 51 into contact with the article 35. As this occurs the roller 36 will rotatively actuate the roller 16 and through it the rollers 15, to cause the article 35 to be rotated on its axis in a direction to circumferentially wrap the label *a* upon the external surface of the article 35. During this wrapping the end of the label *a* will be withdrawn from the flange 31 and said label *a* will be properly supported by the projections 33 of the members 32 as the wrapping operation proceeds; at the same time the pressure roller 15 will not only maintain the article 35 in proper position but will also exert a pressure upon the label *a* whereby the latter is effectively applied to the particular article 35. When the wrapping of the label *a* upon the article 35 has been completed at the station C, the rollers 36 and 51 are moved away from each other by the action of the cams 47 and 55, whereupon the rotation of the rollers 16 and 15 and accordingly the rotation of the article 35 ceases. At the proper moment the table 13 is again rotatably shifted through an arc of 90° to shift that pair of rollers 15 which carries the article 35 to which the label *a* has been applied, to the ejecting station D. At this station the labeled article 35 may be removed from the rollers 15 by hand or provision may be made for automatically ejecting said labeled article 35 from said rollers 15. It will be understood that as the table 13 is intermittently actuated in the manner set forth, that each pair of rollers 15 is moved to the several stations in successive sequence, the several operations being carried out concurrently at each station during periods of rest in the intermittent rotation of the table 13, so that the operation of the machine is rapid and substantially continuous.

In the fragmentary detailed illustration of another form of the machine shown in Fig. 3, the table 13a corresponding to the previously mentioned table 13, is provided with a predetermined number of seats 15a and may be intermittently actuated in a manner described with respect to Figs. 1 and 2 or otherwise manipulated in accordance with the character of the machine in which said table 13a is embodied. The form of the machine now being described also includes secondary supporting means for supporting the previously gummed labels in position for application to the articles for which said labels are intended, said secondary supporting means being illustrated in the form of upright posts 28a located upon opposite sides of each seat 15a in spaced relation thereto at distances dependent upon the dimensions of the labels for which the machine is primarily designed. At their upper ends the upright posts 28a carry supporting members 31a, the upper surfaces of which are located at a common level predetermined with respect to the articles to which the labels are to be applied. The form under discussion also embodies wrapping means whereby the label is applied to or wrapped about the article, said wrapping means being located at a station corresponding to the station C of Fig. 1, or being otherwise disposed in dependence upon the type of machine in which said wrapping means is incorporated; in the illustrated example, the wrapping means comprises levers 45a provided with rollers 36a and pivoted at 41a upon a vertically movable plunger 60. The levers 45a include arms 61 acted upon by springs 62 in a manner to force the rollers 36a toward each other; it will be understood that any suitable mechanism operating in properly timed relation to the other parts of the machine may be provided for vertically operating the plunger 60 for the purpose to be more fully set forth hereinafter. In addition the plunger 60 yieldingly carries a pressure member 51a mounted upon a rod 52a which itself is slidable within the plunger 60 and is guided in its vertical movements by means of a head 63 movable lengthwise of the plunger 60 and acting also as a stop for arresting the outward movements of the pressure member 51a. A spring 64 surrounds the rod 52a and has its one end in engagement with the plunger 60 and its other end in engagement with a collar 65 fixed upon said rod 52a. In the preferred form the machine shown diagrammatically in Fig. 3 may be provided with means for heating the supports 31a for the purpose of maintaining the adhesive coating of the labels in a tacky condition. Such heating means may be of any suitable type and as indicated at 66 is of an electrically operated type.

In practice the table 13a may be intermittently operated to bring the seats 15a to the stations corresponding to the stations A, B, C, D of Fig. 1, in which case the article 35a illustrated as of cylindrical form is placed in position on a seat 15a at the station A and is then carried to the applying station B, it being understood that when this transfer takes place the plunger 60 and its associated elements will occupy a raised position at station C so as not to interfere with the described movements of the table 13a. When the article 35a reaches the applying station B, a label *a'* is carried by suitable prime supporting means, for instance, such as hereinbefore referred to, into adhesive receiving relation with

an adhesive applying means, as exemplified by the roller 59ª of Fig. 1, and subsequently to the application of the adhesive is transferred by said prime supporting means to a position in which the opposite ends of said gummed label are located upon and adhesively attached to the upper surfaces of the supporting members 31ª with an intermediate portion of the label a' in tangential contact with the surface of the article 35ª. Because of the tacky condition of the adhesive coating at this stage, the label a' at its opposite ends will adhere lightly to the supporting members 31ª and accordingly will be held in position thereby for application to the article, the latter in the illustrated example co-operating with said supporting members 31ª in thus supporting said label a'. When the operation of positioning a label a' has been completed, the table 13ª will be actuated to bring the article 35ª and the label a' to the wrapping station C. At this stage and in proper operative synchronism with the other parts of the machine, the plunger 60 will be moved downwardly to initially bring the pressure member 51ª into contact with the label a' at the point of tangential engagement thereof with the article 35ª to thereby press said label a' into firm adhesive engagement with said article, as will be apparent. As the downward movement of the plunger 60 continues, said plunger 60 will move lengthwise of the rod 52ª to compress the spring 64 to thereby progressively increase the pressure exerted by the pressure member 51ª upon said label a', which accordingly is firmly held in proper position against shifting relatively to the article 35ª. At the same time the continuing downward movement of the plunger 60 will cause the rollers 36ª to engage the label a' on opposite sides of the pressure member 51ª and to withdraw the opposite ends of said label from the supports 31ª; in the continuing downward movement of the parts the rollers 36ª will follow the outer shape of the article 35ª, which in the illustration is cylindrical, and accordingly will wrap the label a' about said article 35ª or in other words, apply said label thereto. By the action of the springs 62 the rollers 36ª during these operative steps will develop a pressure upon the label a' to cause it to firmly adhere to the article 35ª and to effect an efficient application of said label a' to said article 35ª.

The form of the machine illustrated in the fragmentary manner in Fig. 4 is designed especially for applying labels as exemplified for instance, by revenue stamps to the heads of bottles or the like, and in its construction may correspond substantially to the arrangement illustrated in Fig. 3. The machine under discussion accordingly also includes secondary supporting means for supporting a previously gummed label in position for application to an article, which supporting means, as illustrated, includes supporting members 31ᵇ corresponding to the supporting members 31ª and similarly mounted upon a table such as 13ª; in addition suitable provision may be made upon the table such as the table 13ª, for supporting the article 35ᵇ in position intermediate of the supports 31ᵇ. The machine in addition also includes prime supporting means, for instance such as previously referred to herein, for carrying a label into adhesive receiving relation with an adhesive applying means, such as the roller 59ª and for subsequently transferring the gummed label to the secondary supporting means; the machine further embodies applying or wrapping means illustrated in the form of levers 45ᵇ which may correspond in construction and operation to the members 45ª and carry at their free ends wrapping devices shown in the form of brushes 36ᵇ pivotally secured at 37ª to the levers 45ᵇ; it will be understood that the aforesaid wrapping means may, as in the previous forms, be located at a wrapping station C. As the article 35ᵇ is brought to the label applying station corresponding to the station B, a label a^2 is brought by the prime supporting means into position for transfer to the secondary supporting means and for application to the article with the opposite ends of said label a^2 in adhesive connection with the supporting members 31ᵇ and an intermediate portion of said label a^2 resting upon the article 35ᵇ; the latter thus also co-operates with the supporting members 31ᵇ in the aforesaid support of said label a^2. After the latter has been placed in position as described, the table corresponding to the table 13ª is rotatively actuated or otherwise manipulated to bring the article 35ᵇ with the label a^2 in the position previously mentioned to the wrapping station corresponding to the station C of Fig. 1. The levers 45ᵇ are then moved downwardly into contact with the label a^2 which, as the downward movement of the levers 45ᵇ continues, is withdrawn from the supports 31ᵇ and wrapped upon or applied to the article 35ᵇ, as will be apparent. It will be understood that the levers 45ᵇ are preferably under the influence of springs, such as the springs 62, so that the brushes 36ᵇ develop a pressure upon the label a^2 as it is being applied to the article 35ᵇ; it will similarly be obvious, because of the pivotal connection of the brushes 36ᵇ with the levers 45ᵇ, that said brushes will automatically accommodate themselves to the progressive wrapping operation and to the surface contour of the article 35ᵇ to which the label a^2 is being applied.

In Fig. 5 the machine is diagrammatically illustrated in a form designed specially for applying labels to or wrapping labels upon articles of triangular, rectangular or polygonal form; for purposes of description an article 35ᶜ of triangular shape in cross-section has been selected. The form of the machine under discussion may be of the same general type and operate in the same general manner as those previously described herein and embodies a prime supporting means for carrying a label into adhesive receiving relation with an adhesive applying means, such as the roller 59ª; the form of the machine under discussion may further include a table 13ᵇ similar to the previously mentioned tables 13ª and 13, and also provided with secondary supporting means for receiving the gummed labels from the prime supporting means and supporting said labels in position for application to the articles for which said labels are designed; as illustrated, the aforesaid secondary supporting means comprises upright posts 28ᵇ located upon the upper surface of said table 13ᵇ in spaced parallel relation to each other as shown; the upright posts 28ᵇ at their upper ends carry supporting members 31ᶜ adapted, as in the forms shown in Figs. 3 and 4, to support the label a^3 in wrapping or applying position. The table 13ᵇ further includes seats 15ᵇ arranged upon opposite sides of an opening 13ᶜ with which the table 13ᵇ is provided as illustrated in Fig. 5; the seats 15ᵇ are arranged to support the article 35ᶜ over the opening 13ᶜ and so as to extend across the same for the purpose to be more fully set forth herein-

after. In the form now being described, the seats 15b are closer to one of the supporting members 31c of a given pair than to the other one of said supporting members of said pair, as indicated in Fig. 5. The machine illustrated in Fig. 5 further includes wrapping means located, for instance at a station C, for applying or wrapping the label to or upon the specific articles; in its illustrated form this wrapping means consists of levers 45c corresponding to the levers 45a of Fig. 3 and mounted and operated in the same or an equivalent manner to secure the desired results. At their free ends, the levers 45c are provided with wrapping members illustrated in the form of brushes 36c which may be fixed upon said levers 45c, or otherwise supported thereon as may be found necessary in any given machine. In addition the machine of Fig. 5 includes an additional lever 45d provided at its free end with a wrapping member shown also in the form of a brush 36d pivotally connected with the lever 45d at 37b; the lever 45d is operated in any convenient manner to reciprocate the brush 36d lengthwise of the opening 13c of the table 13b.

In practice after the article 35c has been placed in position upon the seats 15b at a feeding station corresponding to the station A of Fig. 1, the table 13b may be rotatively actuated to bring the article to the applying station such as the station B in Fig. 1. At this point the label is carried by a prime supporting means into adhesive receiving relation with the adhesive applying means, and the adhesively coated label a^3 is carried by the prime supporting means such as hereinbefore described into position for transfer to the secondary supporting means whereby said label a^3 is held in position for application to the article 35c; in this position the label a^3 has its opposite ends in adhesive connection with the supporting members 31c and at an intermediate point nearer its one end is in contact with the outer surface of the article 35c as shown in Fig. 5. The article 35c here also thus co-operates with the supporting members 31c in supporting the label a^3 in position for application to said article 35c. When the label a^3 has been placed in applying position at the station B, the table 13b is again actuated to shift the article 35c and the label a^3 in the applying position to the wrapping station corresponding for instance, to the station C of Fig. 1. When this has been done the levers 45c are moved downwardly by suitable means into contact with the label a^3 which, as the downward movement of the levers 45c continues, is withdrawn from the supports 31c and applied to the two diverging outer surfaces of the article 35c. At the completion of this step the label a^3 will be adhesively connected with the two aforesaid surfaces of the article 35c and will project downwardly beyond one of said surfaces as indicated by dotted lines in Fig. 5; this is due to the fact that the article 35c is located nearer to the one support 31c than to the other, or in other words, is closer to one end of the label a^3 than to the other. As the next step in the wrapping or applying operation the lever 45d is operated in the direction of the arrow in Fig. 5 to cause the brush 36d to bring the depending portion of the label a^3 into contact with the lower surface of the article 35c; the aforesaid depending portion of said label a^3 will thereby be adhesively connected with said lower surface of the article 35c and accordingly will complete the application of the label to such article. It will be understood that the machine may be adapted for applying labels to articles of rectangular or polygonal form in a corresponding manner by arranging the applying mechanism accordingly.

The diagrammatically illustrated arrangement shown in Figs. 6 and 7 corresponds to the machine shown in Figs. 1 and 2 and differs therefrom only in the fact that the suction head 59b or its equivalent is provided with an electrically operated or equivalent heating device 67 so located that it will engage that end of the label which is adhesively secured to the article 35d which is of circular form and may correspond to the article 35 of Fig. 2. This heating device 67 may serve to soften the plastic coating with which the articles 35d, as exemplified by many types of dry battery cells are covered, along a line lengthwise of said article 35d to cause said plastic coating to act as an adhesive for adhesively securing the one end of the label to the article 35d. In such case an adhesive coating previously applied to the label may be in the form of a strip a^4 located at the other end of the label a^5, as shown in Fig. 7, which adhesive strip a^4 will operate first to adhesively attach said other end of the label a^5, for instance, to a supporting member or flange 31 as in Fig. 2, and subsequently to fasten the label a^5 in position on the article 35d when completely applied thereto. The construction and operation of the arrangement illustrated in Figs. 6 and 7 may be otherwise as set forth previously herein in connection with Figs. 1 and 2.

As set forth in the description the articles to which the labels are to be applied co-operate with the several secondary supporting means in the different forms of the machine, to support said labels in position for application to the articles for which said labels are intended. It will be understood that in the forms shown in Figs. 3, 4 and 5 the co-operating supporting members 31a, 31b and 31c respectively, of the secondary supporting means constitute the major factors in such support of the labels and in some cases may effect such support independently of but relatively to the articles to be labeled.

The novel machine in all of its forms is simple in construction and provides for carrying a label into adhesive receiving relation with adhesive applying means and subsequently transferring the gummed label to secondary supporting means whereby the gummed label is efficiently supported in position for application to an article and furthermore provides for the rapid and efficient removal of the labels from said secondary supporting means and their application to the articles for which said labels are designed. The machine is particularly adapted for handling labels of unusual dimensions and for applying the same to articles of unusual size and shapes, and is of maximum efficiency in applying labels to cylindrical articles of small diameter and to articles having a cross-sectional form other than cylindrical. In all the forms of the machine the label is held by the aforesaid secondary supporting means in position for application to an article, generally by the adhesive coating of such label while such coating is still tacky, so as to be easily released from such applying position and applied to the article in a uniform and efficient manner.

Various changes in the specific forms shown and described may be made within the scope of

the claims without departing from the spirit of the invention.

I claim:

1. In a labeling machine, the combination of a carrier movable to successive operating stations, holding means on said carrier for supporting an article to be labeled, secondary supporting means on said carrier in predetermined relation to said holding means for temporarily receiving and supporting a previously gummed label, prime supporting means operative at a given station for depositing said gummed label upon and in temporary adhesive contact with said secondary supporting means in predetermined applying relation to said article, and means operative at a subsequent station for releasing said label from its temporary adhesive contact with said secondary supporting means and for effecting the application of said label to said article.

2. In a labeling machine, the combination of means for carrying a label provided with adhesive on its one surface, means on which said label is deposited by said carrying means subsequent to the application of said adhesive to said label to adhesively support at least one end of said label while the latter is in position for application to an article, and means for effecting the release of said one end of the label from said supporting means and the application of said label from said position to said article.

3. In a labeling machine for applying adhesive coated labels, the combination of holding means for supporting an article to be labeled, additional means co-operating with an article positioned upon said holding means in supporting a label in position for application to said article, and means for carrying said label into adhesive receiving relation with an adhesive applying means and for subsequently depositing said label upon said additional means in temporary adhesive contact therewith and in initial adhesive contact with said article in predetermined applying relation to the latter.

4. In a labeling machine for applying adhesive coated labels, the combination of holding means for supporting an article to be labeled, additional means co-operating with an article positioned upon said holding means in supporting a label in position for application to said article, means for carrying a label during application of adhesive thereto and for subsequently depositing said label upon said additional means in temporary adhesive contact therewith and in initial adhesive contact with said article in predetermined applying relation to the latter, and means for releasing said label from said additional means and effecting its application to said article.

5. In a labeling machine, the combination of a movable carrier, holding means on said carrier for supporting an article to be labeled, additional means on said table co-operating with an article positioned upon said holding means in supporting a label in predetermined position for application to said article, and means for carrying a label during application of adhesive thereto and for subsequently depositing said label upon said additional means in temporary adhesive contact therewith and in initial adhesive contact with said article in predetermined applying relation to the latter.

6. In a labeling machine for applying adhesive coated labels, the combination of a movable carrier, holding means on said carrier for supporting an article to be labeled, a support on said carrier in spaced relation to said holding means and with which one end of a label may be in adhesive contact while another portion of said label is in adhesive engagement with an article supported on said holding means whereby said support and said article co-operate in supporting said label in predetermined position for application to said article, and means for carrying said label during application of adhesive thereto and for subsequently depositing said adhesive coated label on said support in said applying position for application to said article.

7. In a labeling machine for applying adhesive coated labels, the combination of a rotatable table, a group of rollers carried by said table for supporting an article to be labeled, a member mounted on said table in spaced registry with said group of rollers with which one end of a label may be in adhesive contact while the other end of said label is in adhesive engagement with the outer surface of the article supported by said group of rollers whereby said article and said member co-operate to support said label in position for application to said article, means whereby said rollers are rotated to rotate said article about its axis and thereby withdraw the end of said label from said member and progressively apply said label circumferentially of said article, and means for carrying said label during application of adhesive thereto and for subsequently transferring said label to a position for adhesive engagement respectively with said member and said article.

8. In a labeling machine for applying adhesive coated labels, the combination of a rotatable table, a group of rollers carried by said table for supporting an article to be labeled, a member mounted on said table in spaced registry with said group of rollers with which one end of a label may be in adhesive contact while the other end of said label is in adhesive engagement with the outer surface of the article supported by said group of rollers whereby said article and said member co-operate to support said label in position for application to said article, means whereby said rollers are rotated to rotate said article about its axis and thereby withdraw the end of said label from said member and progressively apply said label circumferentially of said article, and means on said table between said member and said group of rollers for supporting said label during its progressive application to said article.

9. In a labeling machine for applying adhesive coated labels, the combination of an intermittently rotatable table, a group of co-operating rollers carried by said table for supporting an article to be labeled, a member adjustably mounted on said table in registry with said group of rollers with which one end of a label in applying position is adapted to be adhesively engaged while the other end of said label in said applying position is adhesively engaged with the article supported on said group of rollers, wrapping means adapted to be operatively combined with said group of rollers at the end of an intermittent movement of said table, said wrapping means operating to rotate said group of rollers to rotate the article supported thereby on its axis whereby said label is progressively applied circumferentially of said article, pressure developing means operating in harmony with said wrapping means for maintaining the article in place and for applying pressure to said label during its application to said article, and means located between said member and said group of

rollers for supporting said label during its progressive application to said article.

10. In a labeling machine for applying adhesive coated labels, the combination of an intermittently rotatable table, a group of co-operating rollers carried by said table for supporting an article to be labeled, a member adjustably mounted on said table in registry with said group of rollers with which one end of a label in applying position is adapted to be adhesively engaged while the other end of said label in said applying position is adhesively engaged with the article supported on said group of rollers, wrapping means adapted to be operatively combined with said group of rollers at the end of an intermittent movement of said table, said wrapping means operating to rotate said group of rollers to rotate the article supported thereby on its axis whereby said label is progressively applied circumferentially of said article, pressure developing means operating in harmony with said wrapping means for maintaining the article in place and for applying pressure to said label during its application to said article, means located between said member and said group of rollers for supporting said label during its progressive application to said article, and means for shifting said wrapping means and pressure developing means to inoperative position at the completion of the application of the label to said article to avoid interference with a subsequent intermittent rotation of said table.

11. In a labeling machine for applying adhesive coated labels, the combination of a carrier, a pair of co-operating supporting members mounted on said carrier in spaced relation to each other for receiving a previously gummed label, means for conveying said gummed label and depositing it upon said supporting members in temporary adhesive contact therewith and in predetermined position for application to an article, and means on said support for supporting said article in label receiving relation to the label temporarily deposited on said supporting members.

12. In a labeling machine for applying adhesive coated labels, the combination of a carrier, a pair of co-operating supporting members mounted on said carrier in spaced relation to each other for receiving a previously gummed label, means for conveying said gummed label and depositing it upon said supporting members in temporary adhesive contact therewith and in predetermined position for application to an article, means on said support for supporting said article in label receiving relation to the label temporarily deposited on said supporting members, and wrapping means for releasing said label from said supporting members and for applying said label to said article.

13. In a labeling machine for applying labels, the combination of a movable table, a group of supporting rollers carried by said table for supporting a cylindrical article to be labeled, supporting means on said table in spaced registry with said group of rollers for adhesively receiving one end of a label while the other end of said label is engaged with the article to be labeled, whereby the latter in co-operation with said supporting means supports said label in an applying position, means for carrying said label during application of adhesive thereto and for subsequently transferring said label to said supporting means and said article, and heating means mounted on said label carrying means in registry with that end of the label which is to be engaged with said article.

14. In a labeling machine for applying labels including an adhesive applying means and a primary supporting means for carrying a label into adhesive receiving relation with said adhesive applying means and beyond the same, that improvement which comprises a movable carrier for supporting an article to be labeled, secondary supporting means on said carrier on which the gummed label is deposited by said primary supporting means in predetermined applying relation to said article, and means whereby said label is released from said secondary supporting means and applied to said article.

15. In a labeling machine, the combination of means for holding an article to be labeled, means for depositing a previously gummed label in applying position in initial adhesive engagement with said article, heating means wherey the adhesive coating of the label is heated, and means for completing the application of the label to the article.

16. In a labeling machine, the combination of means for holding an article to be labeled, supporting means in co-operative relation to said holding means for adhesively receiving a predetermined portion of a label while another portion of said label is engaged with the article to be labeled whereby the label is supported in a predetermined applying position, means for depositing a previously gummed label on said supporting means and article, and heating means mounted on said depositing means in registry with that portion of the label which is to be engaged with said article.

17. In a labeling machine, the combination of a transfer head for transferring a label to an applying station, and heating means mounted on said transfer head whereby a label carried thereby is subjected to the heating action of said heating means.

18. In a labeling machine, the combination of a suction-controlled transfer head for transferring a label to an applying station, and a heating device mounted on said transfer head whereby a predetermined portion of a label carried thereby is subjected to the heating action of said heating device.

19. In a labeling machine, the combination of a transfer head for transferring an adhesive coated label into applying relation to an article to be labeled, and heating means mounted on said head and effective to develop adhesive connection between the label carried by the transfer head and said article.

GEORGE W. VON HOFE.