(No Model.) 2 Sheets—Sheet 1.

W. K. ALLEN.

FRUIT EVAPORATOR.

No. 590,354. Patented Sept. 21, 1897.

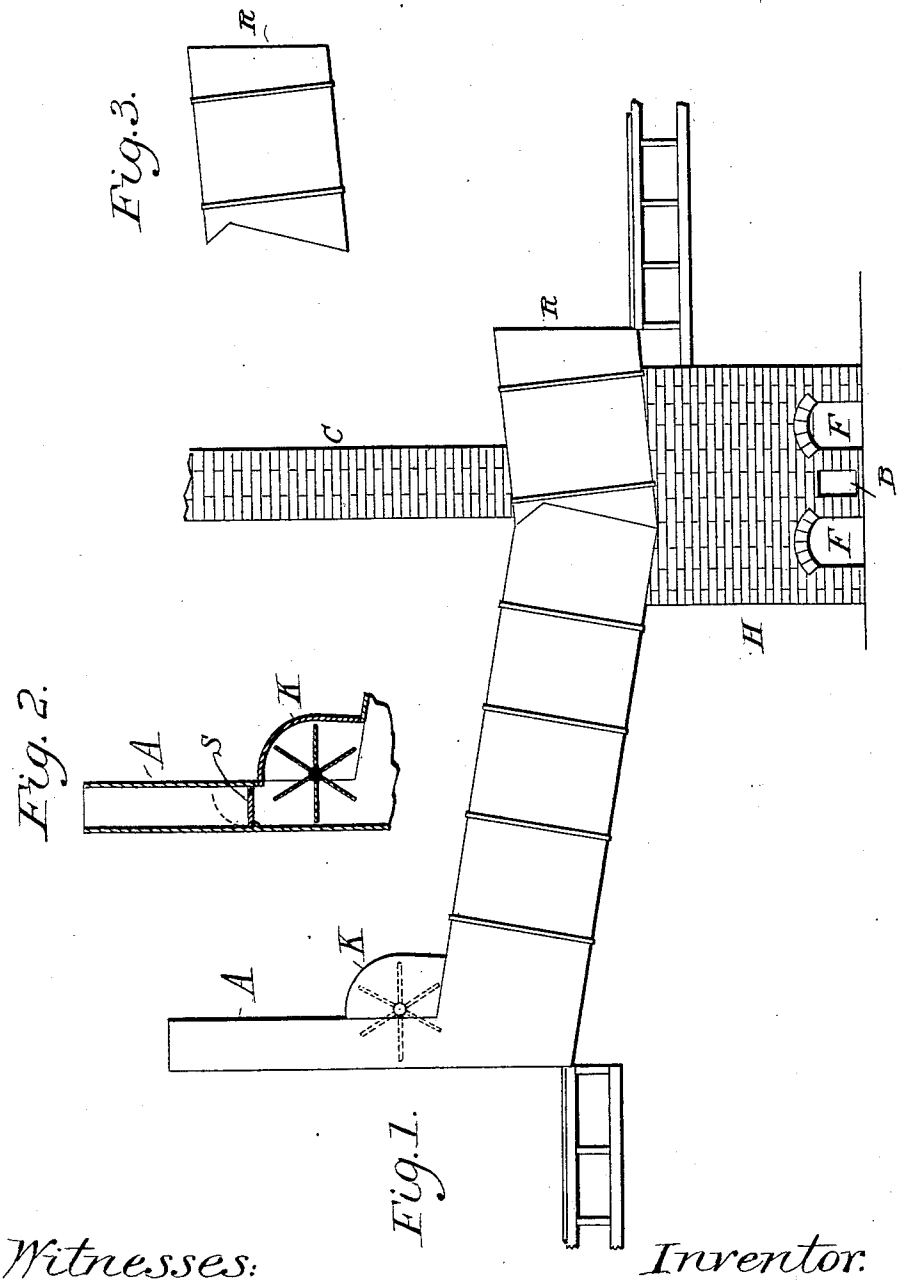

Fig. 3.

Fig. 2.

Fig. 1.

Witnesses:
John K. Wright
Owen C. Wright

Inventor.
William K. Allen

THE NORRIS PETERS CO., PHOTO-LITHO., WASHINGTON, D. C.

(No Model.) 2 Sheets—Sheet 2.

W. K. ALLEN.

FRUIT EVAPORATOR.

No. 590,354. Patented Sept. 21, 1897.

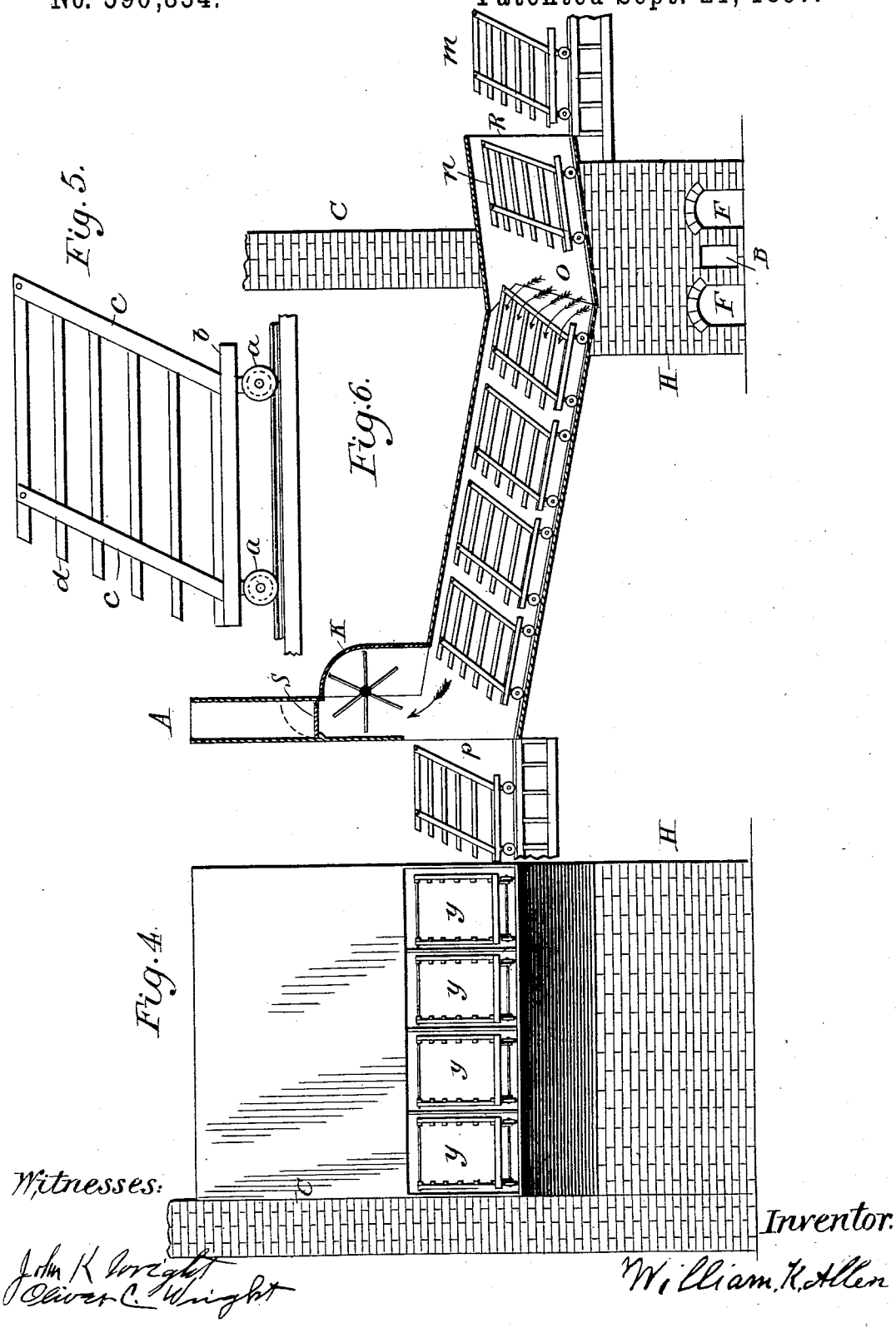

Witnesses:

John K. Wright

Oliver C. Wright

Inventor.

William K. Allen

THE NORRIS PETERS CO., PHOTO-LITHO., WASHINGTON, D. C.

UNITED STATES PATENT OFFICE.

WILLIAM K. ALLEN, OF NEWBERG, OREGON.

FRUIT-EVAPORATOR.

SPECIFICATION forming part of Letters Patent No. 590,354, dated September 21, 1897.

Application filed May 22, 1895. Serial No. 550,283. (No model.)

To all whom it may concern:

Be it known that I, WILLIAM K. ALLEN, a citizen of the United States, residing at Newberg, in the county of Yam Hill and State of Oregon, have invented a new and useful Fruit-Evaporator, of which the following is a specification.

My invention relates to improvements in fruit-evaporators in which fire or steam heat is used.

Heretofore, in some cases, fruit has been placed on crates and put into the evaporator over the fire and shifted around or run away from the fire. When this is done, the high heat on the fresh fruit bursts the fruit-cells, causing it to drip and waste, also increasing the labor, and requiring close attention.

The object of my invention is to overcome these objections as follows: First, to avoid the drip and waste by introducing the fruit into the evaporator farthest from the fire; second, to save labor and to make the operation of the machine and the evaporation of the fruit continuous by placing the crates on which the fruit is spread in cars and running them through tunnels; third, to so arrange the crates on the cars that the fruit will dry evenly on all the crates; fourth, to provide for a free circulation of hot air through the fruit; fifth, to reverse the incline of the tunnels so as to form an open space that heat may readily ascend between the cars and also to stop the cars on the opposite side of the fire-pit. I attain these objects by the mechanism represented in the accompanying drawings, in which—

Figure 1 is a side view of the plan of the evaporator embodying my invention. Fig. 2 is an end view of the draft-flue with the end removed, showing the suction-fan within; Fig. 3, the extension of tunnels opposite incline over the fire-pit. Fig. 4 is a front view showing the ends of the tunnels opened with cars within and the crates removed. Fig. 5 is the car which the crates slide into on which the fruit is placed for drying. Fig. 6 is the side view with the side removed, showing the cars which carry the fruit through the tunnels.

Fig. 2 shows the draft-flue A the whole width of the tunnels provided with dampers S to regulate the draft at the lower end, and at the ends of the tunnels is a suction-fan K, Fig. 1, to draw the air out of the tunnels. The furnace F heats the air. The draft-flue A and suction-fan K take the air through the tunnels and out through the flue referred to hereinafter.

The invention comprises one or more tunnels Y, with ordinary hinged doors (not shown) at each end and a track extending through them for the cars to run on. The tunnels are opened at the bottom over the fire-pit H, Fig. 6. They incline both ways over the fire-pit H, the longest incline extending back the way the heat passes through the tunnels. In these tunnels cars are run carrying the fruit through them.

Fig. 5 is the car; *a a*, the rollers; *b*, the frame or bed-piece; *c c*, the uprights; *d d*, the slats bolted to the uprights to hold the crates. The uprights *c c* are purposely slanted forward that each crate may project farther forward than the one beneath it in order to catch the ascending heat. The spaces between the slats *d d* are narrowest at the top and widen regularly in descending that more heat may be admitted. As the ascending heat will work up through the fruit and dry the fruit on the crates evenly if the crates were perpendicular, the heat would go too much to the top and dry too fast and the fruit on the bottom crates would not dry fast enough.

Fig. 6 shows the cars in position in the tunnels in working order on the incline down toward the fire-pit H; one car, *n*, pulled across the fire-pit. This leaves an open space O between the cars to admit the passage of the ascending heat. The cold air passes in the furnace at the orifice B and over the crown-sheets and upward in the direction of the arrows, while the products of combustion escape through the chimney C. The heat as it ascends is drawn in by the draft-flue A and suction-fan K (previously referred to) and is carried through the spaces between the crates above, below, and through the fruit and out at the draft-flue A, carrying the moisture from the fruit. This gives free circulation of hot air from the furnace F through the fruit and out the flue A, as indicated by the arrows.

The incline extension, Fig. 3, is the opposite incline to give different position to the cars.

The object of the incline both ways over the fire-pit H is to stop the descending cars on the opposite side of the fire-pit, the incline ascending to change the position of the cars and likewise the crates aslant to the ascending heat and dry equally on the opposite end of the crates, admitting the access of the ascending heat through the different spaces between the crates, producing a free circulation of hot air.

The front car *n* having been in the longest becomes dry first, and being at the end of the tunnel can be examined as evaporation goes on, and when ready to run out, as *m m*, Fig. 6, the cars in the tunnel are then pulled ahead the length of one car. The front car is pulled across the fire-pit as before. This leaves space for another car to go in at *p*, and so on as one car is removed at R another may be put in at *p*, thus making the operation continuous.

If cars are not used, slats may be fastened to the sides of the tunnels the whole length of the tunnels at unequal distances from each other the same as they are to the uprights on the cars, and the crates will slide down to the fire-pit on the slats the same as if the cars were stationary. The evaporation will be the same.

The suction-fan K is run by a belt and pulley if steam is used. If only fire heat is used the fan may be removed and the draft of the flue takes the moisture out, but not so rapidly.

The green fruit having been introduced into the evaporator at the point where the temperature is lowest, as it proceeds on its way through the machine the heat is gradually increased to the finishing-point, and as the evaporation goes on the fruit will contract and thicken and retain its juices instead of bursting its cells and wasting them, as is the case when the green fruit is placed over the highest temperature at first.

I am aware that prior to my invention fruit-evaporators have been constructed with tunnels. I therefore do not claim such broadly, but

What I do claim, and desire to secure by Letters Patent, is—

A fruit-evaporator comprising a furnace, and tunnel connected therewith, and inclined in opposite directions upwardly from the top of said furnace, a series of cars substantially as described, adapted to travel in said tunnel, and a draft-flue connected to said tunnel and provided with a suction-fan and a valve, as and for the purpose set forth.

WILLIAM K. ALLEN.

Witnesses:
OLIVER C. WRIGHT,
JOHN K. WRIGHT.