April 8, 1947. G. I. MILLS 2,418,785

FOLDING TYPEWRITER CONSTRUCTION

Filed April 9, 1945

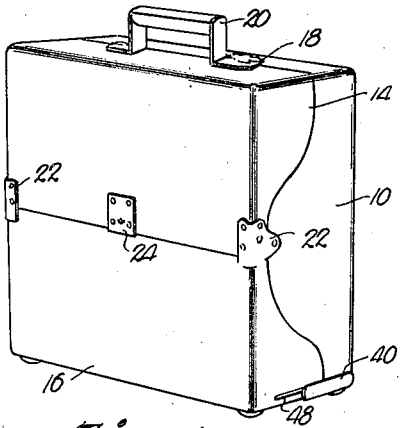

Fig. 1.

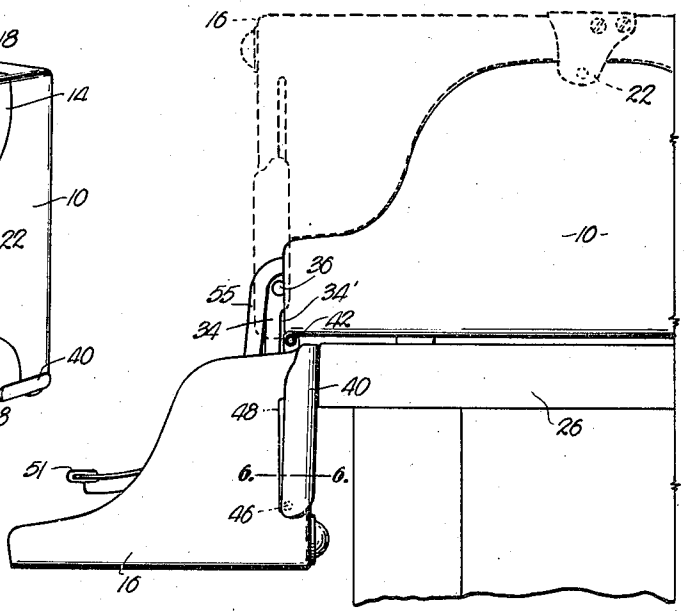

Fig. 2.

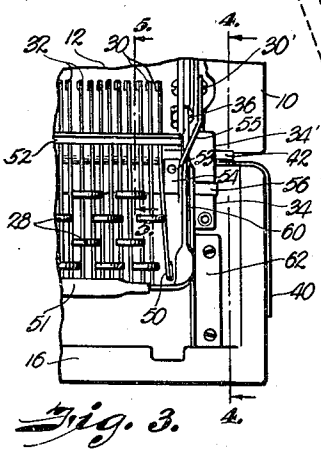

Fig. 3.

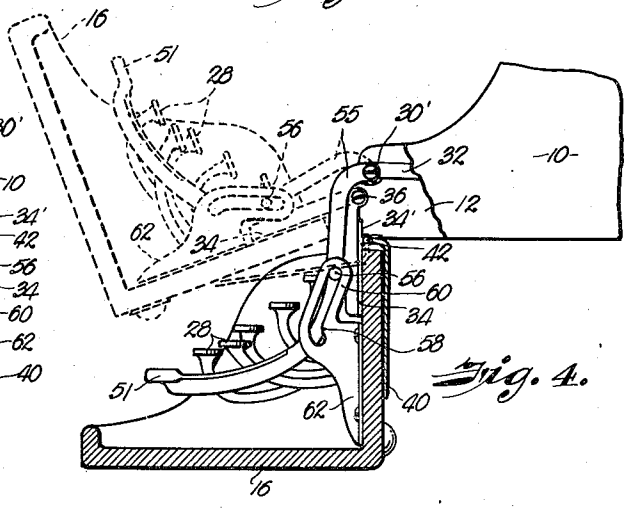

Fig. 4.

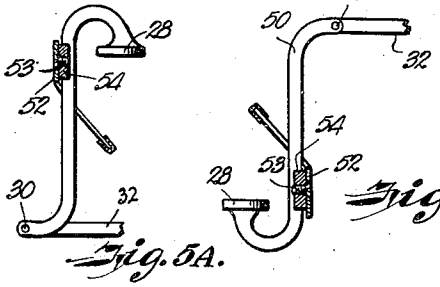

Fig. 5A.

Fig. 5.

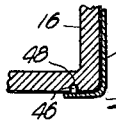

Fig. 6.

INVENTOR.
George I. Mills,

BY Chas. W. Gerard.

ATTORNEY.

Patented Apr. 8, 1947

2,418,785

UNITED STATES PATENT OFFICE

2,418,785

FOLDING TYPEWRITER CONSTRUCTION

George I. Mills, Springfield, Mo.

Application April 9, 1945, Serial No. 587,288

2 Claims. (Cl. 197—186)

1

The present invention relates to the class of portable typewriters, with particular reference to typewriting machines of the folding type and in which the machine is combined with a case adapted to fold up with the machine in such a manner as to completely enclose the machine.

One of the objects of the invention is to provide a combined folding typewriter and case construction in which the folding portion of the machine comprises a drop key assembly adapted to swing into suspended position at the front of the machine and is provided with a folding case section operative in unison with the folding movements of the key assembly, a particular purpose of the invention being to provide such a relation of parts as will effect a completely closed case structure when all the parts are in folded condition, while also affording ample knee room or clearance below the drop portion of the machine when the same is opened up into position for use.

Accordingly I have devised a construction of the character indicated in which the folding section of the case, which encloses the aforesaid drop key assembly, is provided with an auxiliary closure element operative to completely close the case at the hinge joint between said folding section and the remainder of the case.

In this connection it is a further object of the invention to provide means to facilitate and guide the movement of the parts of said drop key assembly into and out of folded relation as said combination key and folding case construction is swung into or out of its folded position.

With the foregoing general objects in view the invention will now be described with reference to the accompanying drawing illustrating one form of arrangement and construction which I have devised for embodying the proposed improvements, after which those features and combinations deemed to be novel and patentable will be particularly set forth and claimed.

In the drawing—

Figure 1 is a perspective view showing a folding typewriter construction of the portable type and embodying the present features of improvement;

Figure 2 is an elevation, on a larger scale, showing the folding portion of the machine carrying the drop key assembly open and dropped into operative position at the front of the machine, and the latter mounted on the edge of a supporting desk or table;

2

Figure 3 is a fragmentary front elevation of the parts shown in Figure 2;

Figures 4 and 5 are vertical sectional details, representing sections taken on the lines 4—4 and 5—5, respectively, of Figure 3;

Figure 5A is a view similar to Figure 5, but illustrating the same parts in folded position; and

Figure 6 is a detail section, as indicated by the section line 6—6 in Figure 2.

The present application relates to improvements in folding typewriter construction of the character illustrated generally in Patent No. 1,987,230, dated January 8, 1935, in that said patent illustrates a folding type of construction which includes a folding case section combined with a drop key structure which swing together into and out of folded relation to the main body portion of the machine. The construction as illustrated in said patent, however, has been found to be defective to the extent that it fails to provide a completely enclosed construction when the parts are folded; and moreover, the folding action in the patent has not proved entirely satisfactory as regards efficiency in the folding movement for assuring proper movement of the parts of the key structure in unison with the folding action of the corresponding folding section of the case. The present invention aims to overcome any such drawbacks in the construction shown in said patent, by providing a supplemental closure means which serves to completely close all the hinge portions of the key-enclosing section of the case, and also providing means coacting with the key structure to assure all proper operative movements thereof as well as guiding the same throughout all such movements.

Referring now to the accompanying drawing in detail, a conventional form of portable and folding typewriter unit is shown, comprising a main case portion 10 into which the main body portion 12 of the typewriting machine is built, and two folding case sections, a rear section 14 designed to fold over the rear paper carriage portion of the machine, and a front section 16 which is hingedly connected to the front of the main body 12 of the machine. The rear folding section 14, which is hinged at 18 to the main body 12 at the rear portion thereof, is provided with the

usual handle 20 as well as clasps 22 for latching the parts in folded or closed relation, in which position they are locked by suitable locking means as indicated at 24.

When the machine is opened for use and mounted on a desk 26 or the like, the case section 16, with its bank of operating keys 28, etc., swings down into suspended relation from the front of the main body portion 12 of the machine, in which position the structure is also braced and supported against the side margin of the desk top, as illustrated in Figure 2.

In the prior construction, the case section 16 was hinged in alinement with the pivots 30 between the drop keys 28 and the type operating bars 32, which has been found to be objectionable for the reason that when the folding case section was swung up into closed position, there was left an open or unclosed space adjacent to said hinge line of the folding section. In the present improved construction I provide a bracket 34 for each of the ends of the section 16, and each of these brackets is pivoted, at 36, to the front of the main body 12 of the machine. Each bracket 34 includes a flat extension 34' projecting across the hinge axis and adapted to abut against the front of said body 12 of the machine, when opened for use, thereby cooperating with the abutting action of the section 16 against the desk top for supporting and bracing the machine while in operation.

For serving as a closure for the space which would otherwise be left open at the front of the main body portion 12 of the machine, I provide an auxiliary closure section 40 which is hinged, as at 42, to the front margin of said main body portion and so shaped at the margins of said section as to enclose the adjacent margins of the folding case section 16 when the latter is in its open position as shown in Figure 2, while also spanning or enclosing the space between the hinge 42 and the edges of said section 16 when the latter is in closed position, as shown in Figure 1. Moreover, for maintaining a proper coacting relation between said section 16 and the auxiliary closure section, the corners of said auxiliary section 40 (opposite its hinge) are provided with pins 46 operating in guide slots or grooves 48 extending along the outer corners of the section 16, whereby the auxiliary closure 40 and the adjacent wall of the section 16 are maintained continuously parallel or in approximately coplanar relation throughout the relative movements of said parts.

The arms of the drop keys 28 and of the other operating links 50 are extended through the slots of a comb bar or plate 52 which is of angular cross-section and secured at each of its opposite ends by a fastening 53 to the offset lower end 54 of an arm 55 (see Figures 5 and 5A), the opposite or inner end of which is pivoted at 30' to the framework 12 of the machine (see Fig. 3) and in substantial alinement with the pivots 30 of the key elements. The said offset 54 of each arm 55 also is provided with a pin 56 which rides in an inclined slot 58 formed in an arm 60 of a bracket 62 attached to the interior face of the casing section 16. The pins 56 also serve as fulcrums for the spacer bar 51 which operates the link 50 connected with the spacing mechanism. Moreover, by means of the pins 56 being continuously engaged and operated by the slots 58, the comb bar 52 is automatically actuated in response to the opening and closing movements of the swinging case section 16, for causing said bar 52 to move alternately into the positions illustrated in Figure 5 and Figure 5A, respectively.

From the foregoing it will be apparent that I have devised a practical and efficient construction for fulfilling the desired objects of my invention.

In the open or operative position of the machine the same is firmly supported and braced by the joint abutting action of the casing 16 against the edge of the supporting table or desk, and of the extension 34' of the bracket 34 projecting above the hinge axis into abutting engagement with the front base portion of the machine.

When the folding section 16 is swung upward, through the dotted line position indicated in Figure 4, into fully closed position as represented by the dotted lines in Figure 2, the auxiliary closure element 40 is automatically operated to close the space at the front of the base of the machine and above the hinge 42.

This construction enables such an arrangement of the operating connections to be preserved as will postion the keys etc. at the desired convenient operative level and at the same time provide more clearance below the keys, or for more knee room than is practicable with the prior construction.

Moreover, it will be noted that the improved construction includes a special, viz, the comb bar 52 and its operating connections, which provide a guiding and bracing function for the individual key arms whereby a more certain and accurate movement is assured and without any undue play or lost motion, since the relative movement transmitted to the comb bar during the folding and unfolding action of the case section 16 controls the position of said key arms and guides their movement, while at the same time limiting their movement to only such extent as is required for the free operative action or play of the various parts, as will be seen from a comparison of the folded and unfolded positions of the key arms as indicated in Figures 5 and 5A.

While I have illustrated and described what I now regard as an entirely practical and suitable form of construction for satisfactorily embodying my proposed improvements, I desire to be understood as expressly reserving the right to make all such changes and modifications as may fairly fall within the spirit and scope of my invention as defined by the appended claims.

Having thus described my invention, what I claim is:

1. A combination folding typewriter and case construction comprising, in combination with the main body portion of the machine, a drop key assembly and a folding case section enclosing said assembly mounted on said main body portion for folding movement upon hinge means above the bottom supporting level of the machine, key-guiding means supported on said main body portion independently of said folding section and providing individual guideways for the key arms of said assembly, and connections actuated by the movement of said folding case section for controlling the position of said key-guiding means during the folding and unfolding movements of said drop key assembly.

2. A combination folding typewriter and case construction comprising, in combination with the main body portion of the machine, a drop key assembly and a folding case section enclosing said assembly mounted on said main body portion for folding movement upon hinge means above the bottom supporting level of the machine, key guiding means comprising a bar mounted on said main

body portion for movement about a different axis from that of said folding case section and formed with individual guide slots for the key arms of said assembly, and pin and slot connections between said bar and folding case section and actuated by the movement of the latter for controlling the position of said key guiding means.

GEORGE I. MILLS.

REFERENCES CITED

The following references are of record in the file of this patent:

UNITED STATES PATENTS

Number	Name	Date
1,222,497	Tucker	Apr. 10, 1917
1,311,879	DeClamecy	Aug. 5, 1919
1,987,230	H'Doubler et al.	Jan. 8, 1935

FOREIGN PATENTS

Number	Country	Date
23,334	Swiss	1902