(No Model.)

W. H. GOLDSBERRY.

FOLDING SQUARE.

No. 482,900. Patented Sept. 20, 1892.

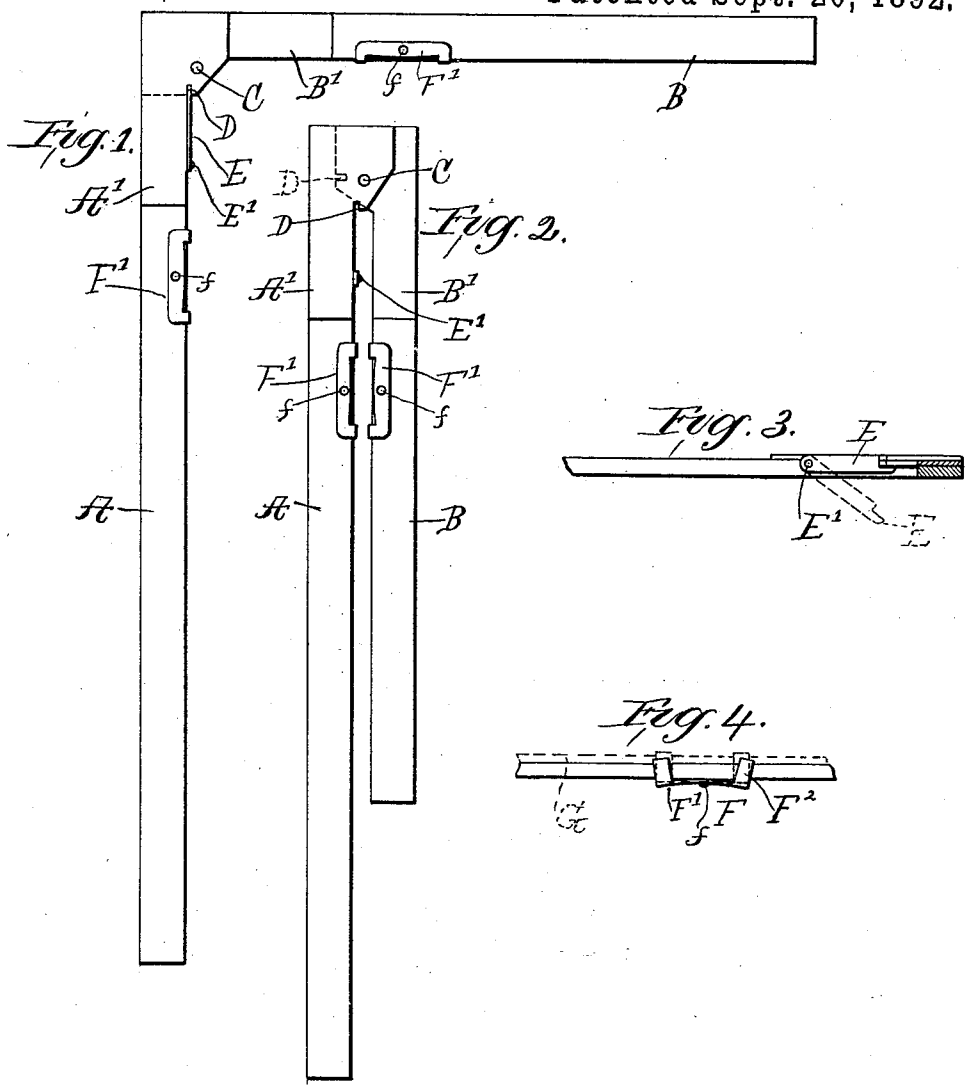

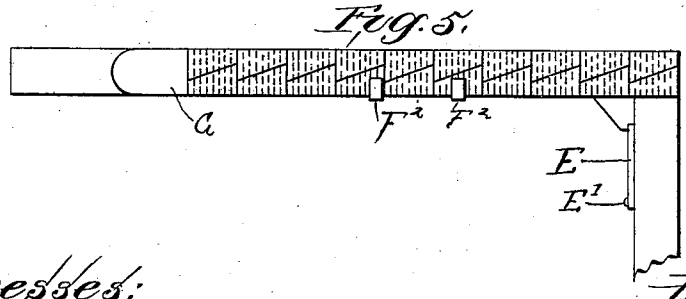

Witnesses:
Ambrose Risdon
Frank L. Stevens

Inventor:
William H. Goldsberry
By Cyrus Kehr
Atty.

THE NORRIS PETERS CO., PHOTO-LITHO., WASHINGTON, D. C.

UNITED STATES PATENT OFFICE.

WILLIAM H. GOLDSBERRY, OF CHICAGO, ILLINOIS.

FOLDING SQUARE.

SPECIFICATION forming part of Letters Patent No. 482,900, dated September 20, 1892.

Application filed November 10, 1891. Serial No. 411,456. (No model.)

To all whom it may concern:

Be it known that I, WILLIAM H. GOLDSBERRY, a citizen of the United States, residing at Chicago, in the county of Cook and State of Illinois, have invented certain new and useful Improvements in Squares; and I do hereby declare the following to be a full, clear, and exact description of the invention, such as will enable others skilled in the art to which it appertains to make and use the same, reference being had to the accompanying drawings, and to letters of reference marked thereon, which form a part of this specification.

My improved square comprises a locking-hinge located between the two arms of the square, and also an improved clamp combined with the arms of the square for clamping to said arms a measuring rule or scale.

The object of the invention is to reduce the square to the greatest degree of simplicity.

In the accompanying drawings, Figure 1 is a side view of the extended square. Fig. 2 is a similar view of the square when folded. Fig. 3 is a detail of the locking-hinge. Fig. 4 is a detail of the clamp for securing the measuring-rule. Fig. 5 is a detail showing the measuring-rule applied to one of the arms.

A is the long arm, and B is the short arm, of the square. The hinge is formed upon the pintle C. Each of said arms is beveled at the meeting end at an angle of forty-five degrees to conform to a plane bisecting the angle of the square when the latter is open.

To the top of the arm A, at the end extending to the hinge, a metal plate A′ is applied, so as to extend over a plate B′, applied similarly to the arm B. At the end extending to the hinge the arm A is formed of the same thickness as the arm B in order that the plate B′ may extend evenly over both of said arms. Adjacent to the plate B′ the arm A is made sufficiently thick to bring the upper face thereof into the plane of the upper face of the plate B′. By this simple means an even surface is made to receive the plate A′. At the lower side of the square the arms should have even surfaces meeting in the same plane. Under this arrangement the operation of dressing the sticks constituting the arms A and B is made easy, while the plates A′ and B′ are allowed to be flat unbent strips stamped from sheets. The pintle C extends through the plates A′ and B′ and secures such plates to each other in such manner as to permit the arms A and B to turn upon the pintle C until said arms extend at right angles to each other. When in such position the square is said to be "open." When the arms are turned so as to lie parallel to each other, the square is said to be "closed" and the meeting edges of said arms are termed the "inner" edges, while the opposite edges of said arms are termed the "outer" edges. The outer edge of each arm is extended past the pintle C sufficiently to meet the outer edge of the other arm when the square is open, so that said outer edges will together constitute a right angle. The portions of the inner edges of said arms adjacent to said pintle are extended away from said shaft out of the line of the main portions of said edges into the right angle which would be formed by extending the main portions of said edges in direct lines, meeting adjacent to said pintle, and each of the portions of said edges so extended has formed in it a notch D, registering with the other of said notches in line with the main portion of the inner edge of one of said arms when the square is open, as shown in Figs. 1 and 3. To said edge of said arm a key E is secured by a nail or screw E′, extending through one end of said key into the arm A in a direction parallel to the plane of the latter and far enough from the notches D to allow the other end of said key to move into said notches when said key is turned upon said nail E′ into line with said arm A. It will be observed that said notches D are adjacent to each other, and that therefore the key E will firmly engage the metal at the sides of said notches and will secure the plates A′ and B′ to each other.

In Figs. 1, 3, and 5 the key E is shown resting in the notch D, while in Fig. 2 the notches are shown separated and the key is shown depending in a direction at right angles to the arm A, and in Fig. 3 the dotted representation of the key E indicates the position which the latter may take when disengaged from the plates A′ and B′.

F F are clamps for holding a measuring-rule G against the sides of the arms A and B, as indicated in Figs. 4 and 5. Said clamps consist of a flexible body F′, lying along one edge of one of the arms A or B, and a finger

F^2, extending from each end of said body around one edge of the arm of the square a sufficient distance to extend over a portion of the face of the rule to be secured by said clamp. The body of the clamp may be secured to the arm upon which it is located by means of a pin *f* or otherwise, the portions of said body carrying said fingers F^2 being normally curved away from said arm and the ends of said fingers being normally in contact with the opposite side of said arm. Upon pressing the portions of said body which support said fingers toward said arm said fingers will recede from said arm and make room for the insertion of the rule G, as indicated in Figs. 4 and 5. It will be observed that the strain upon the fingers F^2 has no tendency to force the clamp F away from the arm A or B. On the contrary, the more strain there is placed upon said fingers by the inserted rule the more closely will the body F′ be drawn against said arm. At such time there is practically no strain upon the pin *f*. The principal function of the pin *f* is really to hold the clamp F in place upon the arm when no rule G is applied to said arm.

I claim as my invention—

1. In a square, the combination of an arm A, an arm B, plates A′ and B′, applied to one side of said arms and overlapping and hinged to each other by the pintle C and each extended past said shaft in line with the outer edge of the arm to which it is attached sufficiently to meet the line of the outer edge of the other arm and extended at the opposite side of said hinge into the angle formed by extending the main portion of the inner edges of said arms in direct lines meeting adjacent to said shaft, and the portions of said plates so extended having notches D, which register in line with the inner edge of one of said arms when the square is open, and a key hinged by one end to said inner edge and adapted to have the other end extend into said notches, substantially as shown and describd.

2. In a square, the combination, with one of the arms of said square, of a clamp F, having a flexible body F′, applied to one side of and along the edge of said arm, and having finger F^2 extending around the edge of said square and resting normally in contact with the face of the arm opposite said body F′, and the portions of said body F′ supporting said fingers being normally curved away from said arm, substantially as shown and described.

In testimony whereof I affix my signature, in presence of two witnesses, this 4th day of November, in the year 1891.

WILLIAM H. GOLDSBERRY.

Witnesses:
FRANK L. STEVENS,
AMBROSE RISDON.