Aug. 21, 1934. I. R. DISBRO ET AL 1,971,098

DOOR GUIDE

Filed June 4, 1931 5 Sheets-Sheet 1

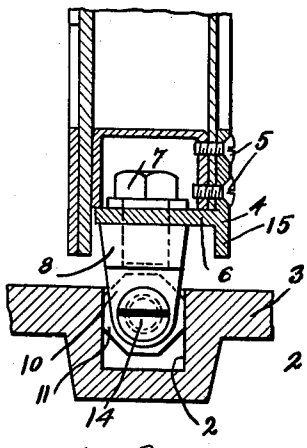

Fig. 2

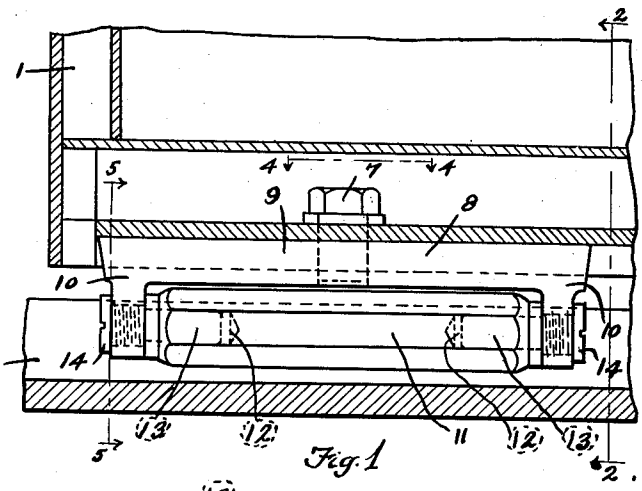

Fig. 1

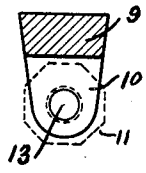

Fig. 5

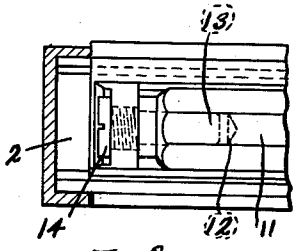

Fig. 3

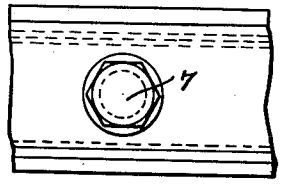

Fig. 4

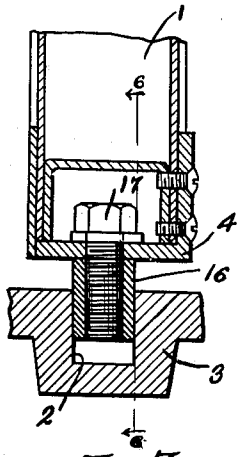

Fig. 7

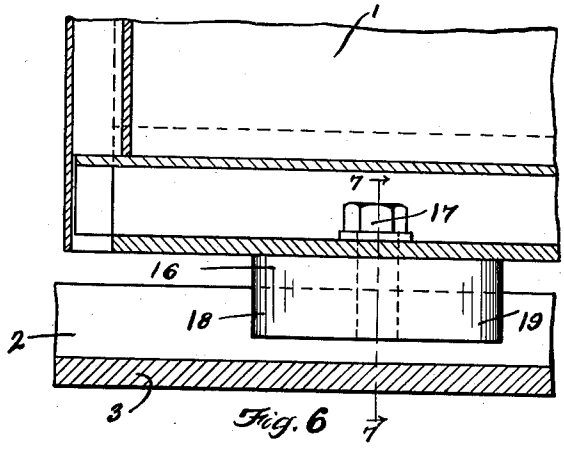

Fig. 6

INVENTOR.
Ira R. Disbro and
BY Charles R. Pickell
Fay Oberlin & Fay
ATTORNEYS.

Aug. 21, 1934. I. R. DISBRO ET AL 1,971,098

DOOR GUIDE

Filed June 4, 1931 5 Sheets-Sheet 2

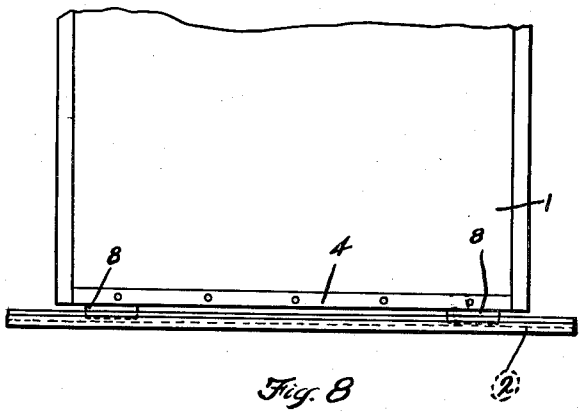

Fig. 8

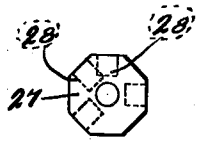

Fig. 11

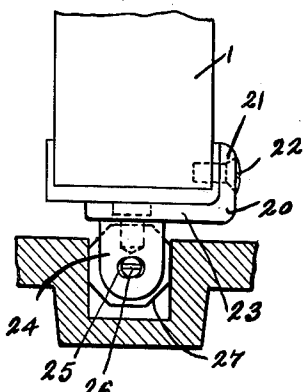

Fig. 10

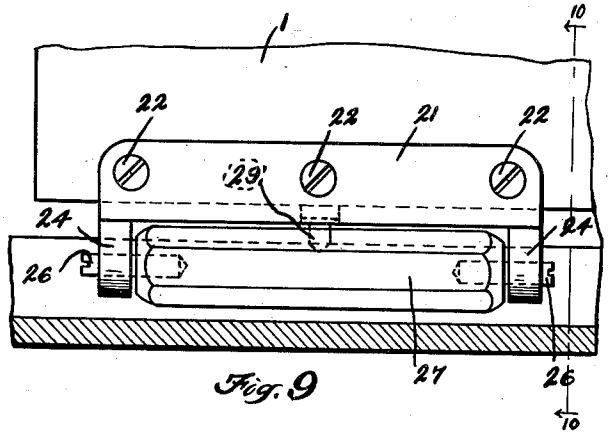

Fig. 9

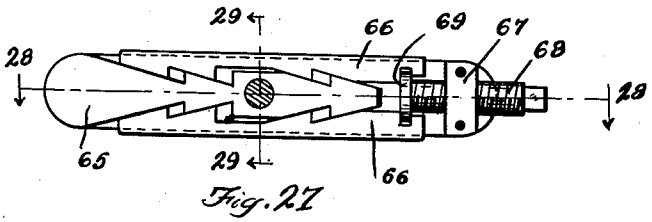

Fig. 27

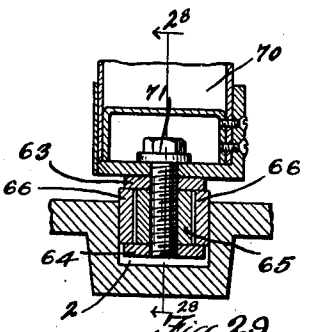

Fig. 29

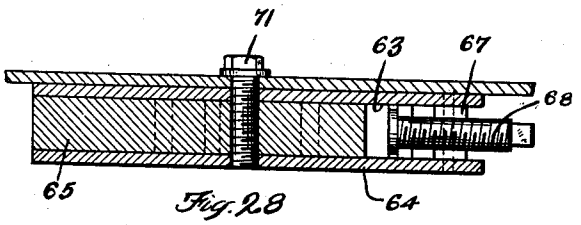

Fig. 28

INVENTOR.

Ira R. Disbro and

BY Charles R. Pickell

Pay O'Berlin & Pay

ATTORNEY.S.

Aug. 21, 1934. I. R. DISBRO ET AL 1,971,098

DOOR GUIDE

Filed June 4, 1931 5 Sheets-Sheet 3

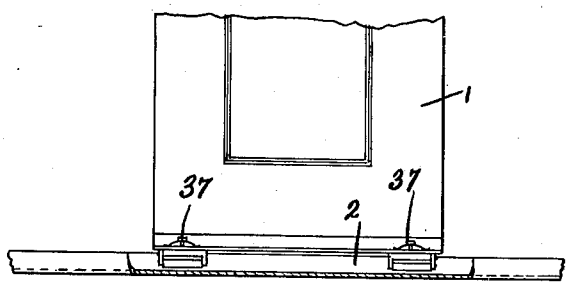

Fig. 12

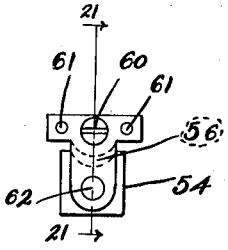

Fig. 22

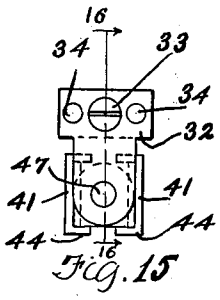

Fig. 15

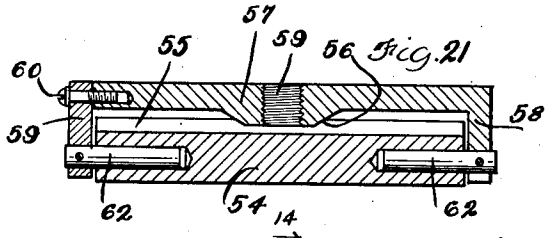

Fig. 21

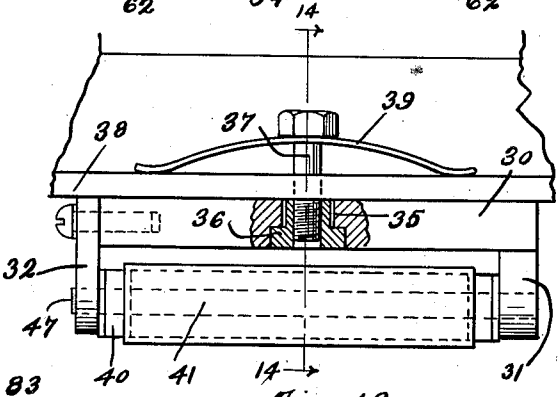

Fig. 13

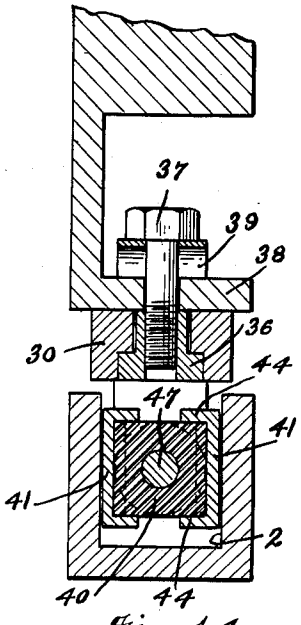

Fig. 14

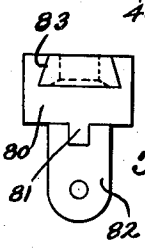

Fig. 25

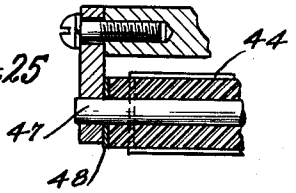

Fig. 16

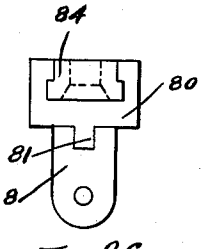

Fig. 26

INVENTOR.
Ira R. Disbro and
BY Charles R. Pickell
Fay Oberlin & Fay
ATTORNEYS.

Aug. 21, 1934. I. R. DISBRO ET AL 1,971,098

DOOR GUIDE

Filed June 4, 1931 5 Sheets-Sheet 4

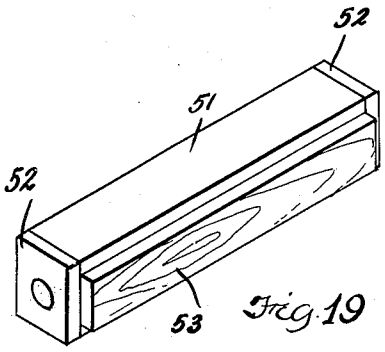

Fig. 19

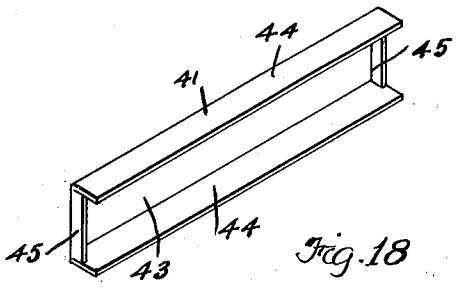

Fig. 18

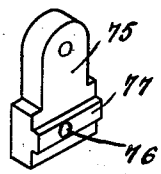

Fig. 24

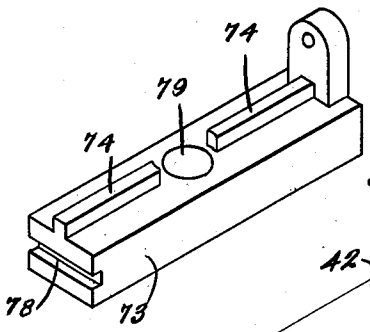

Fig. 23

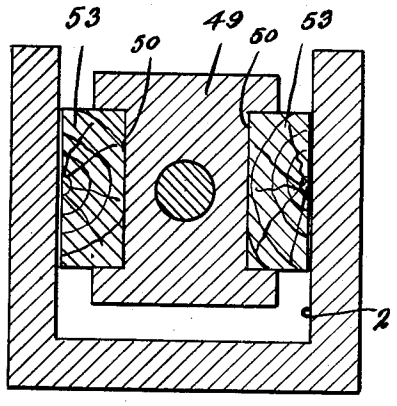

Fig. 20

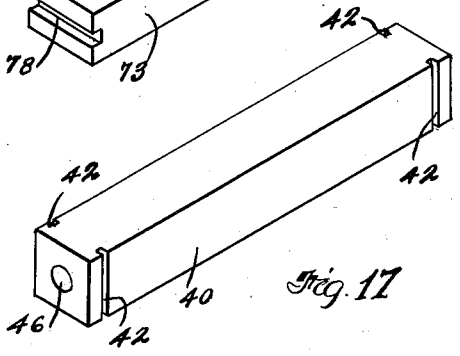

Fig. 17

INVENTOR.
Ira R. Disbro and
BY Charles R. Pickell

Fay Oberlin & Fay
ATTORNEYS.

Aug. 21, 1934. I. R. DISBRO ET AL 1,971,098

DOOR GUIDE

Filed June 4, 1931 5 Sheets-Sheet 5

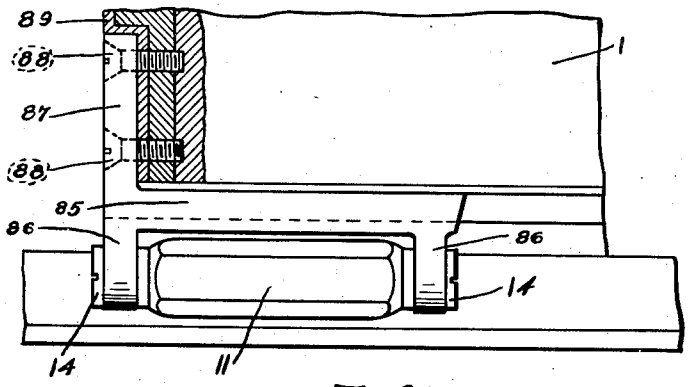

Fig. 30

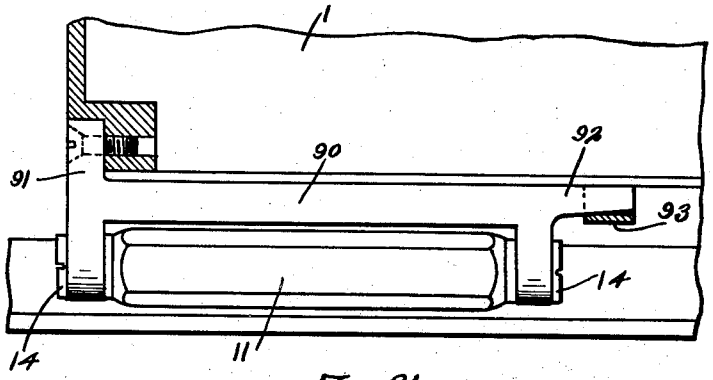

Fig. 31

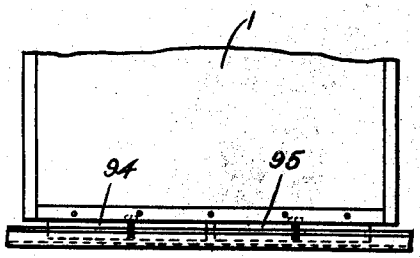

Fig. 32

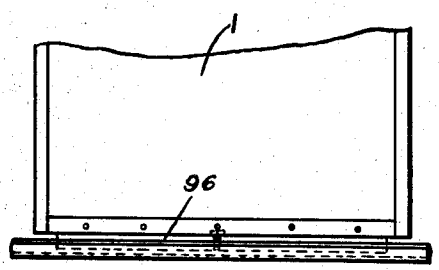

Fig. 33

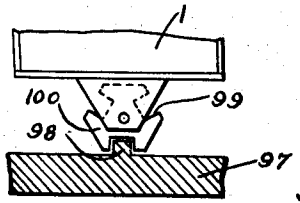

Fig. 34

INVENTOR.
Ira R. Disbro and
BY Charles R. Pickell
Fay Oberlin & Fay
ATTORNEYS.

Patented Aug. 21, 1934 1,971,098

UNITED STATES PATENT OFFICE

1,971,098

DOOR GUIDE

Ira R. Disbro, Lakewood, Ohio, and Charles R. Pickell, Raleigh, N. C., assignors to The W. S. Tyler Company, Cleveland, Ohio, a corporation of Ohio

Application June 4, 1931, Serial No. 542,126

5 Claims. (Cl. 16—93)

This invention, relating as indicated to door guides, has specific reference to a form of construction designed to be employed as a supporting and guiding means for doors, panels and the like usually moving in suitable ways for the purpose of closing openings in walls and the like.

More specifically, our invention relates to a form of construction designed to be employed as a means for supporting and guiding a door or panel and the like so as to reduce to a minimum the noise in a great many instances incidental to the operation of such doors; to provide a construction which is exceptionally durable in operation; and one which may be repaired or replaced with only a minimum of disturbance of the assembled structure.

It is among the objects of our invention to provide a construction having all of the above named desirable characteristics.

Further objects of our invention will appear as the description proceeds.

To the accomplishment of the foregoing and related ends, said invention, then consists of the means hereinafter fully described and particularly pointed out in the claims.

The annexed drawings and the following description set forth in detail certain mechanism embodying the invention, such disclosed means constituting, however, but one of various mechanical forms in which the principle of the invention may be used.

In said annexed drawings:

Fig. 1 is a fragmentary part sectional, part elevational view of the preferred form of construction of the apparatus comprising our invention; Fig. 2 is a transverse, sectional view of the mechanism illustrated in Fig. 1 taken on a plane substantially indicated by the line 2—2; Fig. 3 is a fragmentary part sectional, part bottom view of the apparatus illustrated in the previous figures; Fig. 4 is a fragmentary plan view of a portion of the apparatus illustrated in Figs. 1 and 2 taken on a plane indicated by the line 4—4 in Fig. 1; Fig. 5 is a part sectional, part elevational view of a portion of the apparatus illustrated in Fig. 1 taken on a plane substantially indicated by the line 5—5; Fig. 6 is a part sectional, part elevational view of an alternative form of construction of the apparatus comprising our invention; Fig. 7 is a transverse sectional view of the apparatus illustrated in Fig. 6 taken on a plane substantially indicated by the line 7—7; Fig. 8 is a fragmentary side elevational view of a door showing associated therewith the apparatus illustrated in the previous figures; Fig. 9 is a fragmentary part sectional, part elevational view of a door and an alternative form of guide construction; Fig. 10 is a transverse part sectional, part elevational view of the apparatus illustrated in Fig. 9 taken on a plane substantially indicated by the line 10—10; Fig. 11 is an end elevational view of the cartridge forming part of the apparatus illustrated in Figs. 9 and 10; Fig. 12 is a fragmentary part sectional, part elevational view of a door showing associated therewith a further alternative form of guide construction; Fig. 13 is a fragmentary part sectional, part elevational view of a portion of the apparatus illustrated in Fig. 12 drawn to an enlarged scale; Fig. 14 is a fragmentary transverse sectional view of the apparatus illustrated in Fig. 13 taken on a plane substantially indicated by the line 14—14; Fig. 15 is an end elevational view of a portion of the apparatus illustrated in Fig. 13; Fig. 16 is a fragmentary sectional view of the apparatus illustrated in Fig. 15 taken on a plane substantially indicated by the lines 16—16; Fig. 17 is a perspective view of one of the elements of the assembly illustrated in Fig. 13; Fig. 18 is another element of the assembly illustrated in Fig. 13; Fig. 19 is a perspective view of an alternative form of cartridge construction designed to be employed in the previously disclosed assemblies; Fig. 20 is a transverse sectional view of the construction illustrated in Fig. 19 showing the same positioned in a guiding channel. Fig. 21 is a longitudinal sectional view of an alternative form of guide construction; Fig. 22 is an end elevational view of the form of construction illustrated in Fig. 21; Fig. 23 is a perspective view of an alternative form of cartridge supporting means; Fig. 24 is a perspective view of the end member designed to be associated with the element illustrated in Fig. 23; Figs. 25 and 26 are respectively, end elevational views showing further modifications in the form of cartridge supporting means; Fig. 27 is a bottom view of a form of adjustable guide construction; Fig. 28 is a longitudinal sectional view of the structure illustrated in Fig. 27 taken on a plane substantially indicated by the line 28—28; Fig. 29 is a transverse sectional view of the apparatus illustrated in Fig. 27 taken on a plane substantially indicated by the line 29—29; Figs. 30 and 31 are respectively views similar to Fig. 9 showing an alternative form of construction of the bracket means for removably supporting the guide on the door or panel; Figs. 32 and 33 are views similar to Figs. 8 and

12 showing alternative forms of construction of guide means providing a gas and flame seal for the lower edge of the door; and Fig. 34 is a view similar to Fig. 2 showing an alternative form of construction of door sill and supporting guide.

Referring now more specifically to the drawings and more especially to Figs. 1 to 5 inclusive, it will be noted that the construction comprising our invention is designed to be employed as a means for movably supporting a door or panel generally indicated at 1 in a suitable groove 2 formed in a sill 3 or the like. To the lower edge and preferably the rear side of the door 1 is removaly secured a T-shaped member mounting rail indicated at 4 by means of screws 5. The rail member 4 has a horizontal extension 6 to which the hereinafter described form of guide construction is secured by means of a bolt 7.

While in the drawings such as Fig. 3, we have illustrated two guides associated with the lower edge of the door, nevertheless it is to be understood that if desirable, only one of such guides need be employed. The construction of the preferred form of guide construction is as follows:

A U-shaped carriage member 8 is provided which has a central portion 9 provided with a threaded aperture for the reception of the screw 7 and depending arms 10 for the purposes hereinafter more fully explained.

The wearing or removable portion of the guide consists of a removable polygonal prism 11 having an even number of sides which in the drawings are illustrated as eight in number although it will be noted that the number of sides might well be changed without departing from the principles of our invention.

The removable member 11 is terminally provided with apertures 12 which receive pins 13 oscillatably supporting the member 11. The pins 13 are, by means of screws 14, secured in the threaded apertures provided therefor in the depending arms 11 of the U-shaped member 8.

As most clearly illustrated in Fig. 2, the leg 15 of the removable rail member 4 is provided for the purpose of enhancing the appearance of the rear face of the door and further, to provide a closer seal between the door and the sill but, it will be noted, that such leg may be omitted and the member 4 then assume the shape of an angle.

After the apparatus has been in use for a length of time sufficient so that the cartridge or removable member 11 has become worn, the rail member 4 may be removed from the base of the door by a removal of the screws 5. After the screws 5 have been removed, the angle or T-shaped member 4 may be moved relatively transversely of the bottom of the door so that the same may be moved upwardly out of the groove 2 so that the cartridge 11 may be rotated sufficiently to bring a new pair of faces into contact with the walls of such groove. In order to indicate to the one making such adjustment which pair of faces has been worn, we prefer to initially coat the lateral faces of the cartridge 11 with a suitable material such as copper, which might be deposited electrolytically and which will wear off during use and indicate by the change in color the sides which have previously been worn. The reason for the employment of a coating such as electrolytically deposited copper is that any coating which is employed must be of a nature which will not materially increase the size of the cartridge and further, which will not, by wearing off from the active faces, interfere with the smooth operation of the guide.

As most clearly illustrated in Figs. 6 and 7, we may, instead of employing a cartridge and supporting means of the type illustrated in the previous figures, employ a form of construction which consists of a single replaceable block 16. The block 16, as most clearly illustrated in these figures, has a transverse dimension substantially equal to the width of the groove 2 and is centrally provided with a threaded aperture for the reception of a securing bolt 17. The ends 18 and 19 of block 16 are preferably rounded so as to facilitate the movement of such block in the groove 2.

Instead of securing the guide or guides to the lower edge of the door or panel by means of a rail such as 4 extending throughout the width of the door as illustrated in the figures just described, we may prefer to provide brackets such as are illustrated in Figs. 9 and 10 which support the renewable and adjustable cartridge directly on the lower edge of the door without the intermediary of such strip or panel 4.

Such modified form of construction, as illustrated in Figs. 9 and 10, consists of a bracket generally indicated at 20 which has a substantially vertical arm 21 adapted to be secured to the rear face of the door by means of screws such as 22 and a substantially horizontally extending arm 23 by means of which the cartridge is supported. The horizontally extending arm 23 has depending arms 24 which are provided with slotted apertures 25 in which are positioned pins 26 secured to and extending axially from the cartridge 27. The cartridge 27 is provided with a plurality of radially extending recesses 28 such as most clearly illustrated in Fig. 11 into which projects pin 29 carried by the horizontal arm or leg 23 of the bracket 20. The purpose of the pin 29 cooperating with the apertures 28 formed therefor in the body of the cartridge 27 is to insure that such cartridge will pivot about a central vertical axis, which pivotal movement of the cartridge is permitted by virtue of the slots 25 in which the pins 26 are mounted so that as the door or panel moves along the sill, irregularities either in the door or groove may be met with without binding of the guide. Here again, the cartridge 27 will preferably be coated with a suitable material such as hereinbefore indicated for the purpose of indicating to the one adjusting or renewing such cartridge as to the sides which have previously been used.

A further modified form of construction of the door guide and the means for mounting the same on the door or panel is illustrated in Figs. 12 and 13.

Referring more specifically to Fig. 12 which is a part sectional and part elevational view of a portion of the disclosure in Fig. 12 drawn to an enlarged scale, it will be noted that the bracket for supporting the guide consists of a central portion 30, which has depending arms 31 and 32, the latter preferably being separable from the body of the bracket and secured thereto as most clearly illustrated in Fig. 15 by means of a centrally located screw 33 cooperating with spaced dowels 34.

The bracket 30 is provided with a counterbore recess 35 in which is positioned a nut 36 threadably engaged by a screw 37 which passes through a horizontal flange 38 extending along

the lower edge of the door or panel. Interposed between the head of the screw 37 and the upper surface of the flange 38 is a leaf spring member 39 which resiliently maintains the bracket 30 in contact with the lower face of its supporting flange 38.

A modified form of construction of cartridge which may be employed with the bracket illustrated in Fig. 13 or any of the brackets illustrated in the previous figures is more fully disclosed in Figs. 14 to 20. Fig. 14 which, it will be noted, is an enlarged part sectional, part elevational view of the apparatus illustrated in Fig. 13, shows the cartridge as consisting of a central body portion 40 of suitable resilient material such as rubber and shod with hard, preferably metallic, wearing members 41 which contact with the sides of the groove 2 and are mounted on such resilient body in the manner most clearly illustrated in Figs. 17 and 18. Fig. 17 is a perspective view of the resilient body portion 40 which is here illustrated as being substantially rectangular in cross section, although it will be noted that the cross sectional contour of this member might be changed to a polygon having any even number of sides as will become apparent as the description proceeds. Opposite faces of the member 40 are provided with transversely extending grooves 42, such grooves preferably being positioned adjacent the ends of the member. The wearing shoes 41 with which the resilient member 40 is shod is most clearly illustrated in Fig. 18 as comprising a web or wearing face portion 43, laterally extending flanges 44 and end flanges 45. The flange members 44, as most clearly illustrated in Fig. 14, are adapted to overlie the upper and lower faces of the member 40 and the end flange members 45 are spaced equally to the distance between the grooves 42 so that they may be positioned therein and thereby maintained against relative axial movement with respect to the body 40.

The resilient body 40 is provided with a central bore 46 through which extends a pin 47 which, as most clearly illustrated in Fig. 16, is terminally engaged in apertures provided therefor in the depending arms 31 and 32. The repair, renewal and removal of the wearing cartridge just described is believed to be so apparent to those familiar with the art that a detailed description of the operation is unnecessary. A washer 48, as most clearly illustrated in Figs. 13 and 16 may be interposed between the end of a resilient body member 40 and the inner faces of the arms 31 and 32 so as to prevent wear on such resilient body member which might occur upon relative movement between such body member and such arms if such washer were not provided.

A further form of renewable or replaceable cartridge construction is most clearly illustrated in Figs. 19 and 20. In this form of construction, a central body portion 49 is provided which has recesses 50 formed therein on its faces contiguous with the sides of the groove 2. The central body member 49 may be formed in three parts, that is with a middle portion 51 and two end parts 52. When formed in three parts in the manner illustrated in Fig. 19, the milling or cutting of the recesses 50 is materially facilitated and the cost of manufacture accordingly reduced.

Positioned in the recesses 50 and preferably secured therein by suitable adhesive material such as shellac or the like, are wear blocks 53 which may be of any suitable material such as wood, fiber or other synthetic material. The object of providing the inserts 53 is not only to make possible the renewal of the wearing surfaces at a minimum of cost, but also to provide a contact between the metallic side of the groove 2 and the body 49 through the medium of a sound absorbing means such as a block of wood, fiber or the like.

It will be noted that instead of providing cartridges of the types illustrated in the figures just discussed, which are characterized by their provision of renewable wearing means, we may prefer to provide a cartridge of the type most clearly illustrated in Figs. 21 and 22. In these figures is illustrated a cartridge 54 having a substantially rectangular contour but on its upper surface provided with a curved recess 55 into which extends a similarly grooved projection 56, preferably formed integrally with the body of the bracket 57. The bracket 57, here again, has spaced depending arms 58 and 59, the latter being removably secured to one end of such bracket by means of the screw 60 and dowel pins 61. The central rib 56 serves a dual purpose in that the same provides an additional amount of material for the threaded aperture 59 which receives the supporting bolt and further, by engagement with the recess 55, prevents excessive oscillation of the cartridge 54 which is oscillatably supported in the bracket by means of pins 62.

It will be noted in the several modifications of the form of construction of the guides designed to movably support the door or the panel in the groove in the sill, such guides have been formed of non-adjustable structures requiring a replacement as soon as worn to an extent permitting excessive vibration of the door with respect to the sill. In Figs. 27 and 29 is disclosed a form of construction in which the portions of the guide engaging the sides of the supporting groove are rendered adjustable so that compensations may be made for wear either of the guide or the groove without a renewal of any of the parts.

The illustrated form of construction consists of upper and lower plate members 63 and 64 respectively, intermediately of which is secured a wedge block 65, the form of which is most clearly illustrated in Fig. 27.

Positioned intermediately of the plates 63 and 64 and on opposite sides of the wedge member 65 are wear pieces 66. These wear pieces are, on their inner edges, provided with wedge faces adapted to cooperate with the wedge faces on the member 65 so that upon relative movement between the wedge member 65 and the wear members 66, the same will be forced laterally to compensate for wear which may have occurred on the faces of the member 66 or the sides of the groove within which the guide operates. At one end of the guide an abutment 67 is provided which extends intermediately of the plates 63 and 64 and which is provided with a threaded aperture for the reception of a screw 68 which has a radial flange 69 formed integrally therewith at one end. Such flange engages recesses provided therefor on the inner faces of the members 66.

It will be noted that as the screw 68 is moved axially upon the rotation thereof, the members 66 will be removed relatively to the wedge block 65 so that accurate adjustment of the member 66 may be had to adapt the same to the dimen-

sion of the groove within which they operate.

This type of guide is secured and supported from the lower edge of the door 70 by means of a screw 71 which passes through threaded apertures provided therefor in the respective members 63, 64 and 65.

In certain forms of construction it is necessary and sometimes very desirable to provide a form of construction of the supporting means for the movable door or panel which will, to a large measure, provide a seal for flame and gases in case of fire. A particular form of construction of a guide having these characteristics is illustrated in Figs. 23 to 26. In this construction the body 73 of the bracket is provided with longitudinally extending ribs 74 which, when a cartridge of the type such as is illustrated in Fig. 14, is employed in connection therewith will extend intermediately of the flanges 44 and thereby provide a circuitous passage which the gas or flame must take in passing from one side of the panel to the other. Needless to say, any form of cartridge which is provided with a longitudinally extending recess on the upper surface will operate to produce the desired result above stated.

In this form of construction, the separable depending arm 75 is secured to the body 73 of the bracket by means of a bolt or stud passing through an aperture 76 provided therefor. Relative rotation between the body 73 and the arm 75 is prevented by means of a tongue 77 engaging a groove 78 formed in the end of the body. The form of construction illustrated in Fig. 23 is adapted to be secured to the lower edge of the door by means of a bolt which either passes through or is threadably engaged by the aperture 79 extending into or through the body 73 of the bracket.

A further manner in which the bracket may be secured to the lower edge of the door or panel is illustrated in Figs. 25 and 26. In these last named figures, the body 80 of the bracket has ribs 81 formed thereon which are similar in construction and function to the ribs 74 illustrated in Fig. 23 and the depending arms 82 are employed for the purpose of supporting and securing any of the hereinbefore described forms of cartridge construction.

The particular novelty in the form of construction illustrated in Figs. 25 and 26 resides in the provision of a tapered slot 83 formed in the door contacting face of the bracket which will engage a complementary wedge member secured in any suitable fashion to the bottom of the door. When such wedge-shaped recess 83 is provided, the only step necessary to secure the guide to the bottom of the door is to drive the same onto the complementary wedge member and friction between the cooperating elements may be relied upon to secure the bracket in position on the door. Instead of having a recess such as 83 provided with tapered sides as illustrated in Fig. 25, a somewhat different form of wedge recess such as 84, illustrated in Fig. 26, may be employed. Regardless however, of the exact configuration of the wedge-shaped recess, it will be understood that a complementary wedge member will be secured to the bottom of the door for the purpose of frictionally securing the guide in proper position.

In Figs. 30 and 31 are illustrated alternative forms of construction of the bracket means employed for the purpose of removably and oscillatably securing the wearing block or cartridge to the door. The form of cartridge or wearing block construction illustrated in these figures is identical with that illustrated in Fig. 1 and described in connection therewith. Reference characters similar to those employed in connection with the description of Fig. 1 will, therefore, be employed in connection with the form of block construction illustrated in these figures. The major difference between the form of construction illustrated in Figs. 30 and 31 and that illustrated in the previous figures resides in the provision of a bracket means for supporting the wear block which may be removed or replaced for purposes of adjustment or replacement of the wear block without disturbing the relation between the door and the sill. The structure illustrated in Fig. 30 consists of a bracket member having a body portion 85 which has depending arms 86 intermediately of which the wear block 11 is supported. The body portion 85 of the bracket has, at one end, a vertical extending arm 87 which is provided with apertures for the reception of screws 88 which removably secure the arm 87 in a recess provided therefor in the edge 89 of the door.

A slightly different modification is illustrated in Fig. 31 in which the body portion 90 of the bracket has a short arm 91 extending upwardly therefrom at one side similarly to arm 87 and a horizontal extension in the form of a lug 92 at the opposite end. When this form of construction is employed, a bracket such as 93 will be provided on the lower edge of the door which receives the preferably tapered extension 92 of the bracket and when the guide is so supported at the inner end, the arm 91 may be much shorter than the arm 87 illustrated in Fig. 30 in order to provide similar substantial support.

As hereinbefore stated, it is sometimes advisable and even necessary to provide a form of guide construction which will effectively seal the space between the door and the sill against the passage of gas and flame in case of fire. This seal between the door and the sill may be provided as is most clearly illustrated in Fig. 32 by having a plurality of guides such as 94 and 95 secured to the bottom of the door and proportioned as to length so that substantially the entire space between the door and the sill is closed by means of these guides. Instead of having a plurality of separate guides such as is illustrated in Fig. 32, we may prefer to have a guide such as 96 illustrated in Fig. 33 oscillatably supported on the lower edge of the door and extending substantially throughout the entire edge of the door so as to in itself close the space between the door and the sill.

In each of the hereinbefore described forms of guide construction, it will be noted that the sill has been specified as provided with a groove aligned with the line of movement of the contiguous edge of the door for the reception of the door supporting guide. It will be noted, however, that as most clearly illustrated in Fig. 34, the relationship between the guide and the sill may be reversed, i.e., the sill 97 may be provided with a tongue 98 which will be engaged by grooves 99 formed in the body of the wear block of the guide. Here again, the general principles of construction, as outlined in the previous figures, will be employed so that each wear block or cartridge may have a plurality of grooves 99 formed therein so that when one of such grooves wears during use, the machanism may be repaired to its initial state by simply rotating the wear block 100 so that an unused

groove will be brought into cooperation with the tongue 98.

From the above description of several forms of guide construction designed for the purpose of movably supporting a door or panel in a groove provided in a sill or the like, it will be noted that every requirement for efficiency in operation, ease and low cost of maintenance and durability have been provided for.

It is believed that the function and operation of the several described forms of construction are so apparent to those familiar with the art that a further description thereof is unnecessary.

Other modes of applying the principle of our invention may be employed instead of the one explained, change being made as regards the mechanism herein disclosed, provided the means stated by any of the following claims or the equivalent of such stated means be employed.

We therefore particularly point out and distinctly claim as our invention:

1. In a door guiding arrangement for a slidable door, said slidable door being adapted to overlie and move along a guide rail having a groove defined by opposed walls, supporting means secured to the lower edge of said slidable door, and means carried by said supporting means including means adapted to engage said groove walls to steady said door in its movement along said rail and mounted upon an axis extending in the direction of movement of said door and being adjustable about its own axis, said carried means being formed to present opposed faces whereby when certain of said faces respond to wear, others may be presented to said walls by axial rotation of said carried means.

2. In a door guiding arrangement for a slidable door, said slidable door being adapted to overlie and move along a guide rail having a groove defined by opposed walls, supporting means mounted on the lower edge of said slidable door, said supporting means having a pair of depending arms and having a connection with said lower edge located centrally with respect to said supporting means, and means carried by said depending arms including means adapted to engage said groove walls to steady said door in its movement along said rail and mounted for oscillatable movement about its own axis, said axis extending in the direction of movement of said door, said carried means being formed to present opposed faces whereby when certain of said faces respond to wear, others may be presented to said walls by axial rotation of said carried means.

3. In a door guiding arrangement for a horizontally slidable door, said slidable door having a lower edge spaced above and overlying a door sill guide rail, said rail having a groove therein with substantially vertical parallel walls, a bracket secured to said lower edge and a removable member carried by said bracket, said member being in the form of a regular prism with an even number of parallel flat faces, one set of such faces being adapted to engage the said walls of said groove, said member being oscillatably mounted about its own axis, and said axis extending in the direction of movement of said door, the size of and distance between such faces being such that the member is snugly engaged by and non-rotatably held between the walls of said groove, said oscillatable mounting permitting rotation of said member whereby when one set of such faces respond to wear, others may be presented to said walls by axial rotation thereof.

4. In a door guiding arrangement for a slidable door, said slidable door having vertical edges and a lower edge and being adapted to overlie and move along a guide rail having a groove defined by opposed walls, supporting means abutting the lower edge and secured to one of said vertical edges of said slidable door, and means carired by said supporting means including means adapted to engage said groove walls to steady said door in its movement along said rail and mounted upon an axis extending in the direction of movement of said door and being adjustable about its own axis, said carried means being formed to present opposed faces whereby when certain of said faces respond to wear, others may be presented to said walls by axial rotation of said carried means.

5. In a door guiding arrangement for a slidable door, said slidable door having vertical edges and a lower edge having a depending bracket and being adapted to overlie and move along a guide rail having a groove defined by opposed walls, supporting means abutting the lower edge of said slidable door and being secured to one of said vertical edges and slidably retained at one end by said depending bracket, and means carried by said supporting means including means adapted to engage said groove walls to steady said door in its movement along said rail and mounted upon an axis extending in the direction of movement of said door and being adjustable about its own axis, said carried means being formed to present opposed faces whereby when certain of said faces respond to wear, others may be presented to said walls by axial rotation of said carried means.

IRA R. DISBRO.
CHARLES R. PICKELL.