(No Model.)

H. E. GREEN.

DOCTOR FOR FABRIC PRINTING MACHINES.

No. 590,660. Patented Sept. 28, 1897.

Fig. 1.

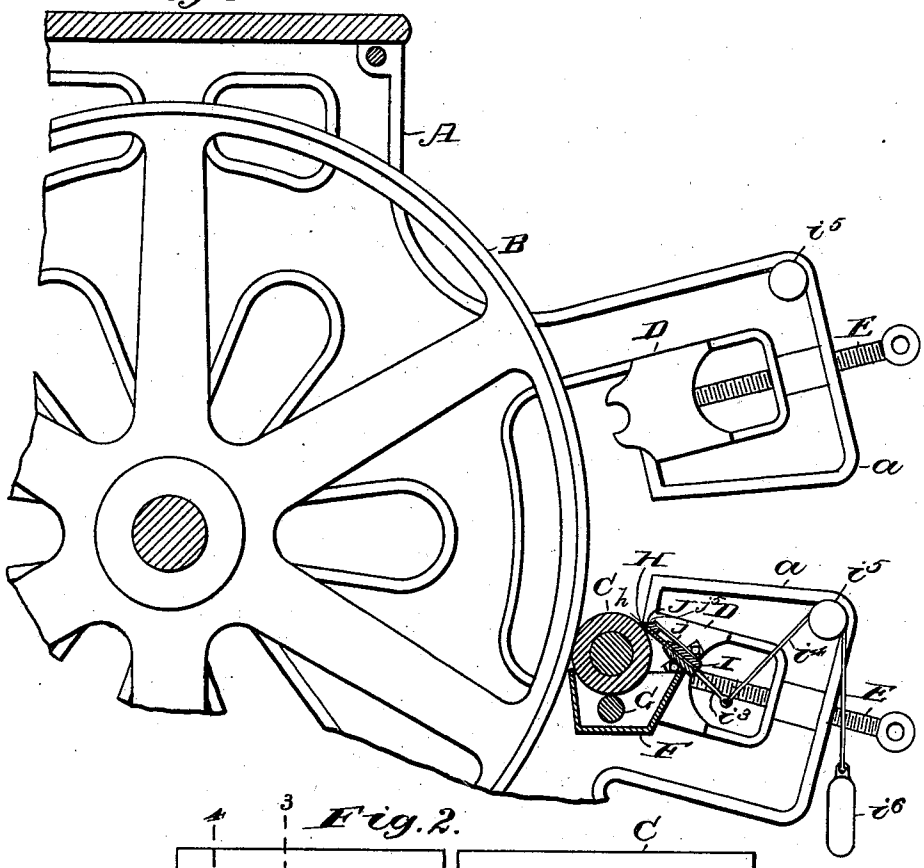

Fig. 2.

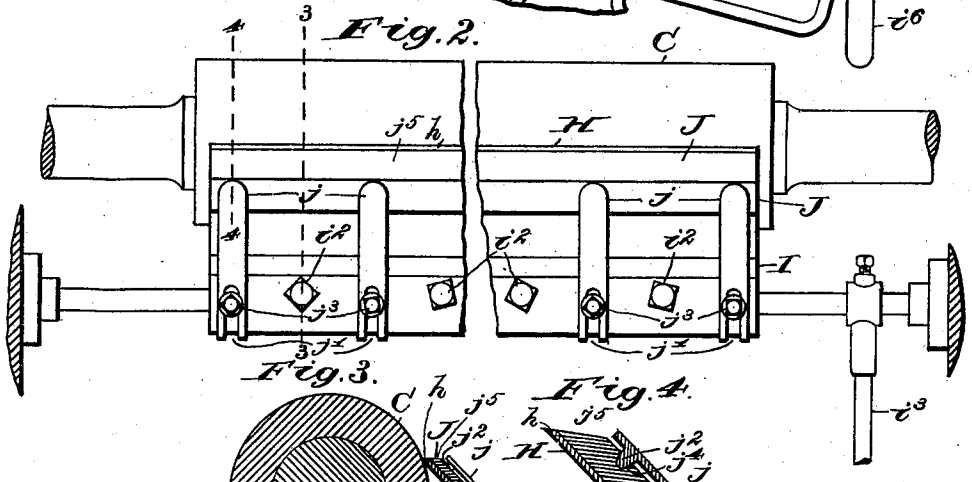

Fig. 3.

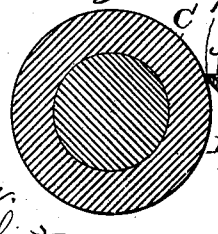

Fig. 4.

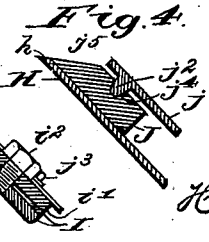

WITNESSES.

Kirkley Hyde.

Grace E. Hibbert.

INVENTOR

Hiram E. Green.

BY Albert M. Moore

His ATTORNEY.

THE NORRIS PETERS CO., PHOTO-LITHO., WASHINGTON, D. C.

UNITED STATES PATENT OFFICE.

HIRAM E. GREEN, OF LOWELL, MASSACHUSETTS, ASSIGNOR OF ONE-HALF TO THOMAS WALSH, OF SAME PLACE.

DOCTOR FOR FABRIC-PRINTING MACHINES.

SPECIFICATION forming part of Letters Patent No. 590,660, dated September 28, 1897.

Application filed July 1, 1897. Serial No. 643,066. (No model.)

To all whom it may concern:

Be it known that I, HIRAM E. GREEN, a citizen of the United States, residing at Lowell, in the county of Middlesex and Commonwealth of Massachusetts, have invented a certain new and useful Improvement in Doctors for Fabric-Printing Machines, of which the following is a specification.

My invention relates to doctors for fabric-printing machines; and it consists in the devices and combinations hereinafter described and claimed.

The object of this invention is to prevent the operating edge of the doctor-plate from "buckling" or getting out of contact with the engraved roll by bending and thus allowing in places the color on the cylindrical or unengraved parts of the surface of the engraved roll to pass the doctor and smear work and to prevent the doctor from "chattering" or rebounding from said engraved roll with a like result along the whole edge of the doctor.

In the accompanying drawings, Figure 1 is a sectional end elevation of a printing-machine such as is used in making calicoes, wall-paper, and similar fabrics; Fig. 2, a rear elevation of an engraved roll, the doctor, doctor-shear, and my improvement; Fig. 3, a vertical section at right angles to the axis of the engraved roll on the line 3 3 in Fig. 2; Fig. 4, a vertical section on the line 4 4 in Fig. 2 of a part of the doctor and of a corresponding part of my improvement.

The frame A, provided with arms *a*, the cylinder B, turning in said frame, the engraved roll C, the pillow block or bearing D of the engraved roll, the pressure-screw E, the color-trough F, the color-supplying roll G, the doctor-plate H, the doctor-shear I, consisting of two clamp-jaws *i i'*, secured by bolts i^2 to each other and clamping the doctor-plate H between them, the doctor-shear lever i^3, and the cord i^4, connected with the outer end of said lever and passing over a pulley i^5 and supporting a weight i^6 to turn the doctor-shear in its bearings and hold the doctor-plate in contact with the engraved roll, are all of any usual construction and operation, it being understood that there are as many engraved rolls C as there are colors to be printed by the machine and two bearings D for each engraved roll and a pressure-screw E for each bearing D.

The color is raised from the trough F by the color-roll G and deposited on the engraved roll C by contact therewith, the surplus color being removed from the engraved roll by the color-doctor H, which is a sharp-edged plate of sheet metal, which rests against the engraved roll nearly tangentially thereto and is so beveled at its outer edge on the side farthest from the engraved roll as to present a very delicate and thin edge in contact with said engraved roll in order to make a perfect contact with said roll and prevent any color from passing the doctor on the unengraved surfaces of the roll.

If any of the color on the unengraved surfaces of the roll D passes the doctor, it smears the cloth irregularly.

The sheet metal of which the doctor is made is usually from a sixteenth to a thirty-second of an inch in thickness, and is sometimes bent or "buckled" by the inequalities of the jaws of the shears or by the heating of the doctor-plate and shears, by the use of hot color, or by the heating of the arbor of the engraved roll on account of insufficient lubrication. The beveled edge of the doctor-plate is also apt to spring into "crossovers" and "objects" and remove too much of the color therefrom, by "crossovers" meaning engraved lines parallel with the axis of the engraved roll and extending from end to end thereof, and by "objects" meaning a local depression in the engraved surface of the roll. The action of the doctor on the objects is to wear the edges of the same and to render the printing less distinct.

Other faults in the printing are made by the chattering or rebounding of the doctor-plate from the engraved roll allowing portions of color on the unengraved parts of the roll to pass the doctor and be impressed upon the fabric.

To prevent the buckling and chattering of the doctor, I apply to its outer face a reinforcing-ruler or straight-edge J, formed of metal or metallic alloy of considerable weight and stiffness as compared with the doctor-plate, and I hold this reinforcing-ruler against the "face" or outer surface of the doctor-

plate II by means of spring-fingers j, as of sheet metal, provided with slots j', through which bolts j^3 are driven into the outer jaw i' of the shear I, as shown in Fig. 2, said fingers j having near their upper ends and on their backs round-pointed projections j^2, which enter larger bowl-like depressions j^4 in the face of said ruler to allow the back of the ruler to fit accurately in the face of the doctor-plate independently of any slight variation in the angle between said springs and the face of the ruler, which may be caused by a variation of distance between the top of the ruler and the bolts j^3. The top edge of the ruler J is preferably beveled at j^5 at the same angle as the bevel h of the doctor-plate makes with the face of the doctor-plate H and is preferably set so that said bevels j^5 h lie in the same plane.

As the doctor-plate becomes worn and requires "filing up" the ruler is moved nearer to the bolts j^3 to keep the bevels j^5 h in their proper relative positions to each other, but only the doctor-plate needs filing, and the work of filing up is rendered much less, because better results may be accomplished in the way of avoiding buckling and chattering by the use of a doctor-plate of No. 22 gage, reinforced as above described, than have heretofore been possible by the use of a doctor-plate of No. 16 gage.

The beveling of the ruler at j^5 is not absolutely necessary, but is desirable to prevent moisture from the color settling upon the the top of said ruler.

I claim as my invention—

1. The combination of the doctor-blade, the doctor-shear and a reinforce or straight-edge, supported by said shear and held against the back of said blade parallel with its edge.

2. The combination of the doctor-blade and its bevel, the doctor-shear and a reinforce or straight-edge, supported by said shear and held against the back of said blade parallel with its edge, said reinforce having a beveled edge arranged in the same plane with the bevel of said doctor-blade.

3. The combination of the doctor-blade, the doctor-shear, a reinforce or straight-edge, and spring-arms supported upon said shear to hold said reinforce in contact with the face of said doctor-blade.

4. The combination of the doctor-blade, the doctor-shear, a reinforce or straight-edge and spring-arms supported upon said shear to hold said reinforce in contact with the face of said doctor-blade, said spring-arms being provided on their backs with round-pointed projections and said reinforce being provided on its face with bowl-like depressions to receive said projections.

5. The combination of the doctor-blade, the doctor-shear, a reinforce or straight-edge, spring-arms arranged to press upon the face of said reinforce and having slots and screws, arranged in said slots and secured in said shear.

In witness whereof I have signed this specification, in the presence of two attesting witnesses, this 29th day of June, A. D. 1897.

HIRAM E. GREEN.

Witnesses:

ALBERT M. MOORE,

THOMAS WALSH.