(No Model.)

J. A. GENDRON.

WAGON.

No. 455,941. Patented July 14, 1891.

Fig. 1

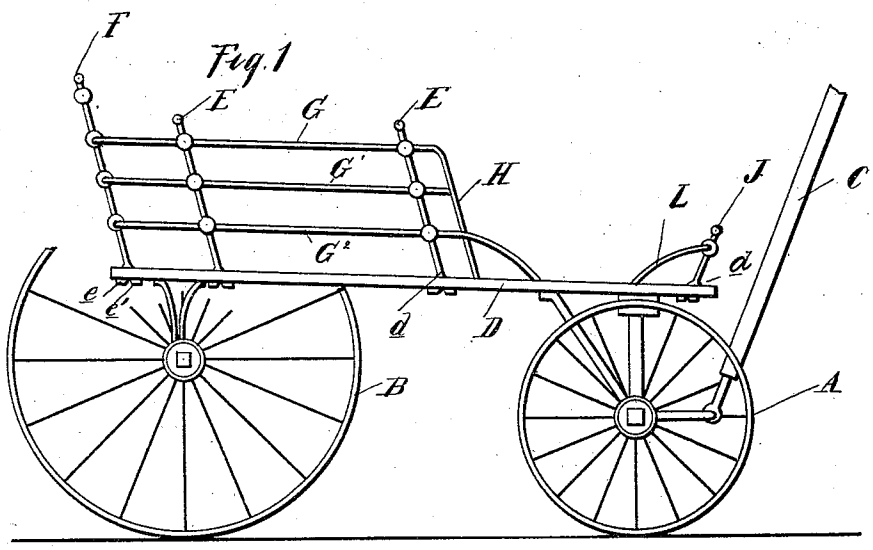

Fig. 2.

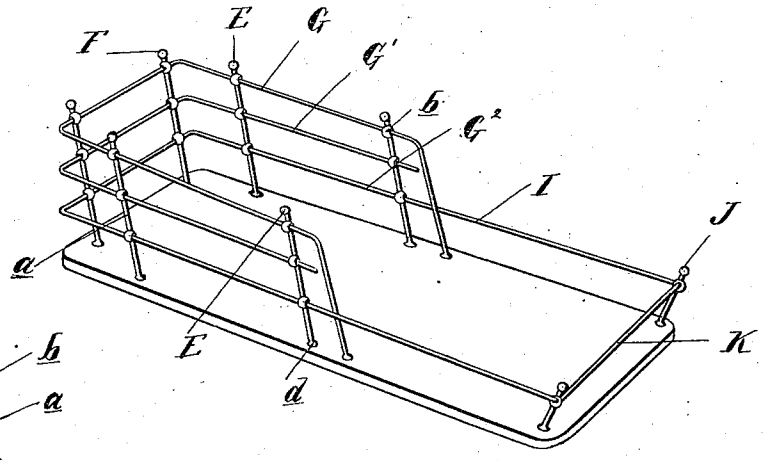

Fig. 3.

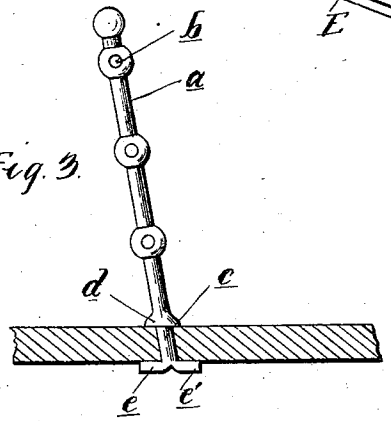

Witnesses

W. B. Dougherty.

P. M. Hulbert

Inventor

Joseph A. Gendron

By Thos. A. Spragues Son

Atty.

THE NORRIS PETERS CO., PHOTO-LITHO., WASHINGTON, D. C.

UNITED STATES PATENT OFFICE.

JOSEPH A. GENDRON, OF TORONTO, CANADA, ASSIGNOR TO THE GENDRON IRON WHEEL COMPANY, OF TOLEDO, OHIO.

WAGON.

SPECIFICATION forming part of Letters Patent No. 455,941, dated July 14, 1891.

Application filed October 27, 1890. Serial No. 369,527. (No model.)

To all whom it may concern:

Be it known that I, JOSEPH A. GENDRON, a citizen of the United States, residing at Toronto, in the county of York and Province of Ontario, Canada, have invented certain new and useful Improvements in Wagons, of which the following is a specification, reference being had therein to the accompanying drawings.

This invention relates to new and useful improvements in toy wagons; and the invention consists in the peculiar construction of a wire frame for the back and sides, whereby a light, strong, and graceful body is formed, and, further, in the peculiar construction and arrangement of the various parts, all as more fully hereinafter described.

In the drawings, Figure 1 is a side elevation of a wagon embodying my invention. Fig. 2 is a detached perspective view of the body, showing a slightly-modified construction of the dash. Fig. 3 is an enlarged elevation of one of the standards, illustrating the method of attaching it to the platform.

A B are the trucks of a toy wagon of ordinary construction, and C is the pole attached to the front axle.

D is the platform. To this platform is secured my improved frame, which consists of a series of standards E, secured at the sides of the platform, and standards F, secured at the rear edge of the platform. These standards are preferably all alike, each consisting of a vertical portion *a*, having a series of eyes *b* formed therein, a bolt or securing portion *c*, which passes through the platform, and a flange *d*, which rests upon the platform. The lower end of the bolt portion *c* is bifurcated into the parts *e e'*, adapted to be turned over the bottom of the platform to secure the standard in place. These standards I preferably make of malleable iron or of other metal which is sufficiently ductile to allow of the metal around the eyes being compressed, for the purpose more fully hereinafter described.

G G' G'' are wires bent into U shape, having the parallel portions engaging through the eyes in the standards E and the connecting portion passing through the eyes in the standards F. The top wire at its forward end is preferably bent downward across the ends of the lower wires to form a guard H and passes through the bottom of the platform, as shown in Fig. 1. The ends of the wire G' extend through the front standard E, while the ends of the lower wire G'' may be secured into the platform D, as shown in Fig. 1, or may be carried forward in the extension I and attached at their forwards ends to the dash-standards J, as shown in Fig. 2. These standards are of similar construction to the standards E, previously described, having similar single eyes formed therein to receive the ends of the dash-wire K. The dash may be formed from a single wire having its ends L curved downward and passed through the platform, as shown in Fig. 1. The frame is preferably made rigid after the wires are passed through the eyes by compressing the metal around the eyes tightly upon the wires, thereby preventing the slipping of the wires through the standards. The standards are also preferably engaged with a slight incline backward.

A body thus constructed of suitable material—such as polished wire—gives a very light and tasty appearance and is exceedingly strong. The standards F engage in the connecting portion of the U-shaped wires and prevent their disengagement from the parallel portions thereof, even if the ends of the wires are not secured in the front standard or in the platform in front thereof.

What I claim as my invention is—

1. In a wagon-body, the combination, with the platform, of a series of upright standards arranged at the sides thereof and passing through the same, their lower protruding ends being split and bent in opposite directions to form a fastening, compressible eyes on the standard, and a series of single-piece wires passing through the eyes around the back and sides of the body, substantially as described.

2. In a toy wagon, the standards *a*, having eyes or loops *b*, and the bifurcations *e e'*, adapted to be turned over against the bottom of the platform, substantially as described.

In testimony whereof I affix my signature in presence of two witnesses.

JOSEPH A. GENDRON.

Witnesses:
L. V. DUSSEAN,
W. P. TORRANCE.