(No Model.)

3 Sheets—Sheet 1.

W. SCOTT.

PRINTING MACHINE.

No. 298,781. Patented May 20, 1884.

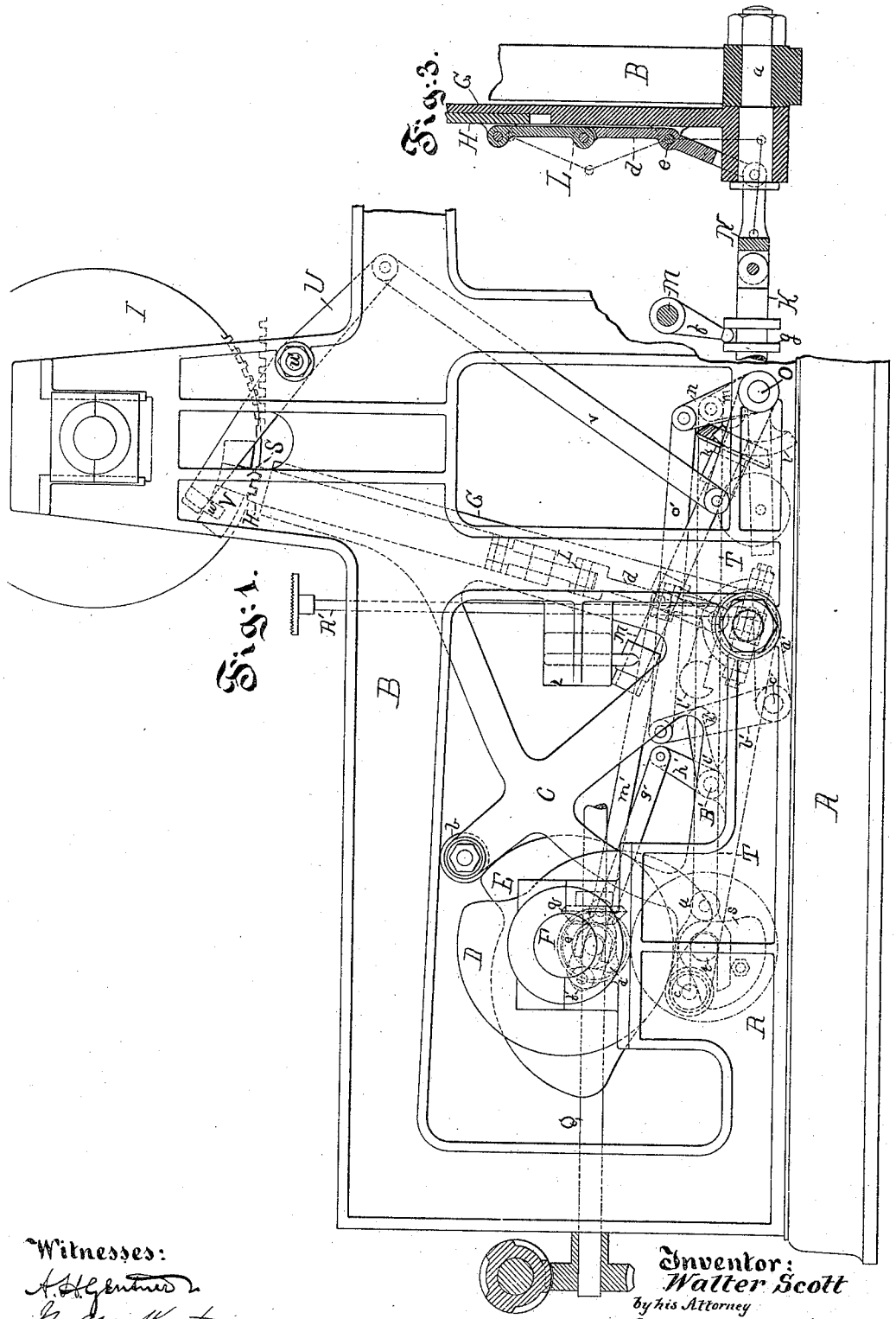

Witnesses:
A. H. Gentner
W. M. Kent

Inventor:
Walter Scott
by his Attorney
Edward Kent Jr.

N. PETERS, Photo-Lithographer, Washington, D. C.

(No Model.)

3 Sheets—Sheet 2.

W. SCOTT.

PRINTING MACHINE.

No. 298,781.

Patented May 20, 1884.

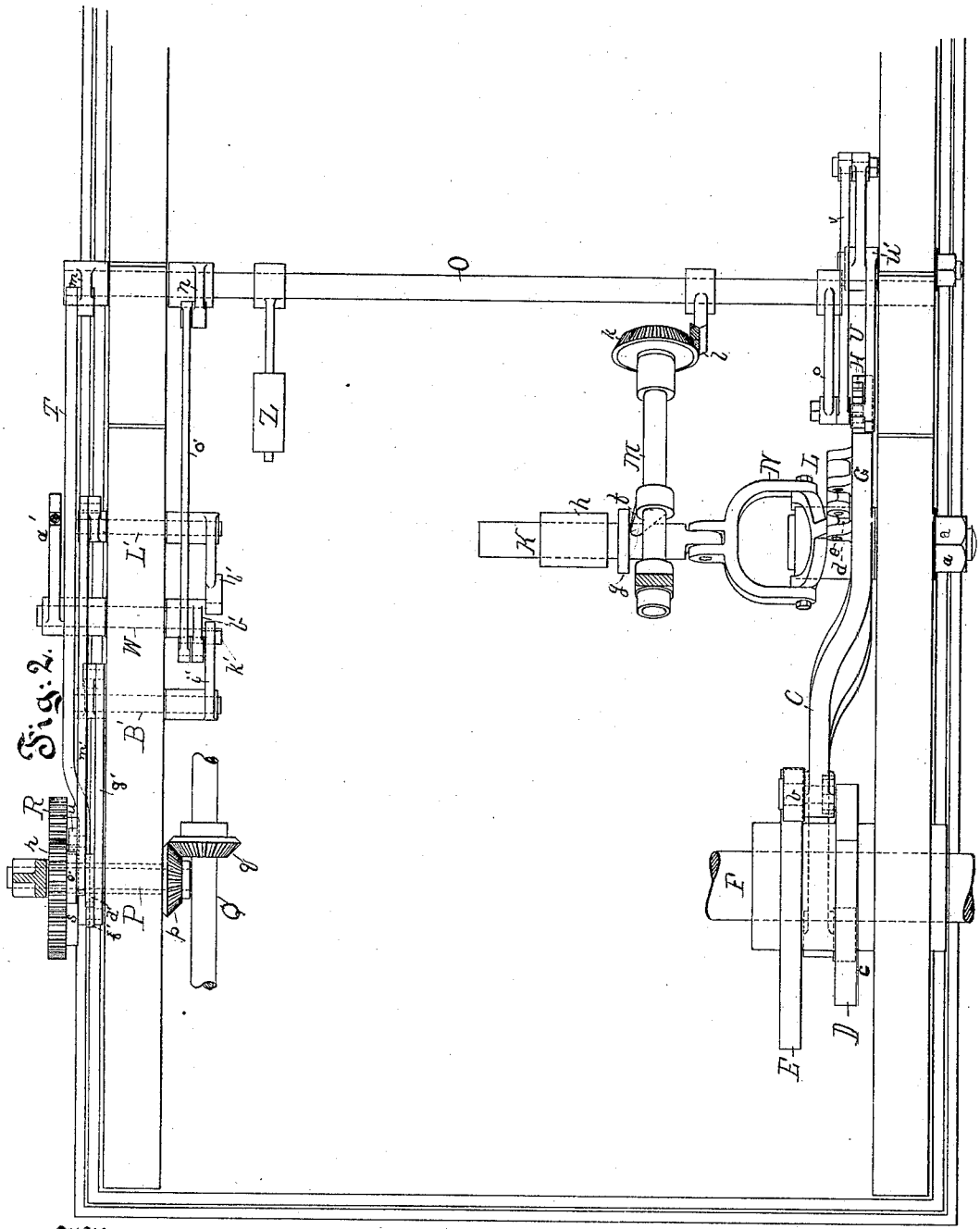

Witnesses:

A. H. Gentner

W. M. Kent

Inventor:

Walter Scott

by his Attorney

Edward Kent Jr.

N. PETERS, Photo-Lithographer, Washington, D. C.

(No Model.)

3 Sheets—Sheet 3.

W. SCOTT.

PRINTING MACHINE.

No. 298,781. Patented May 20, 1884.

Fig. 5.

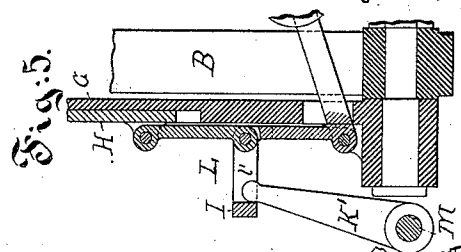

Fig. 4.

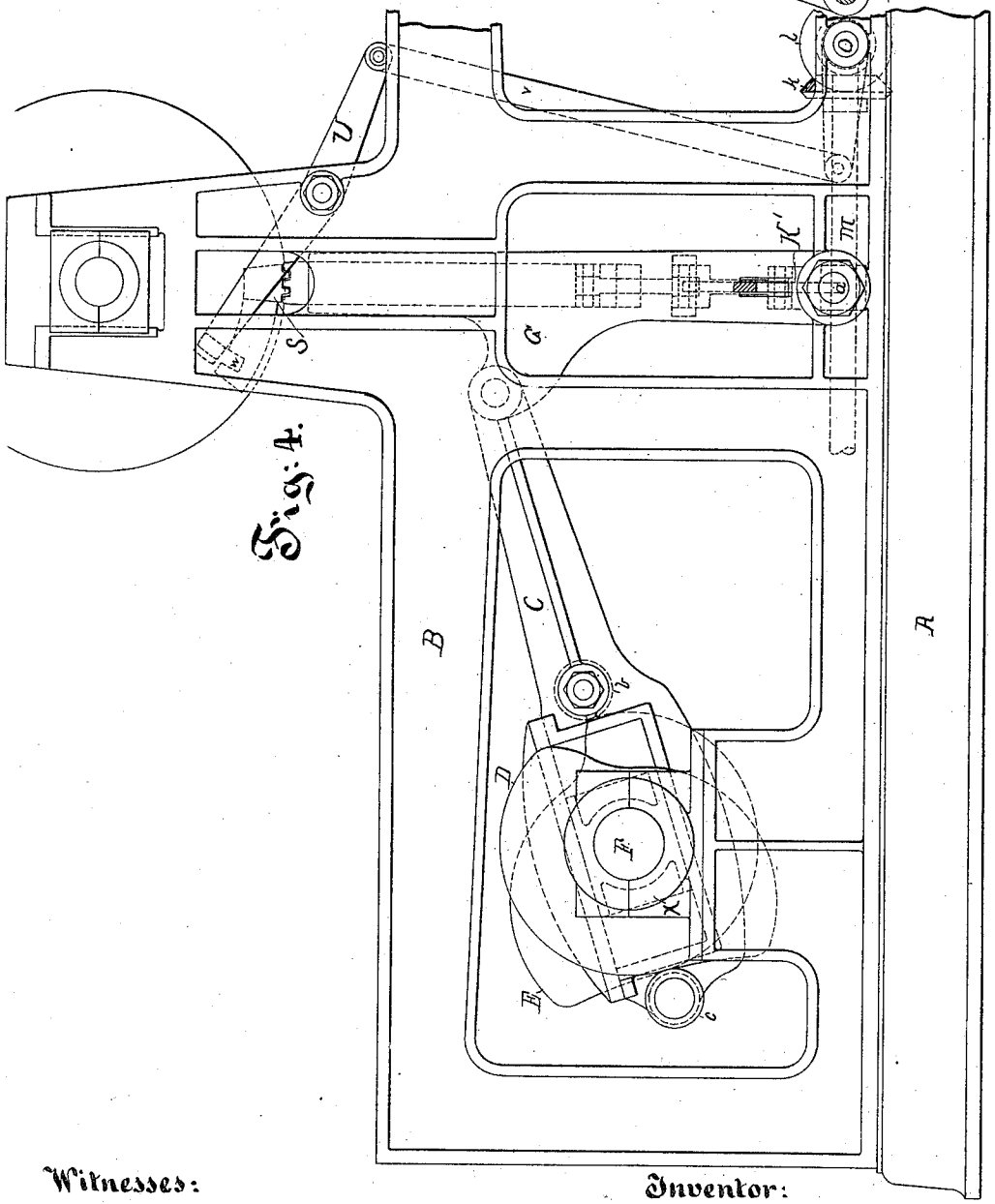

Witnesses:

A. H. Gentner

F. M. Kent

Inventor:

Walter Scott

by his Attorney

Edward Kent Jr.

N. PETERS. Photo-Lithographer, Washington, D. C.

UNITED STATES PATENT OFFICE.

WALTER SCOTT, OF PLAINFIELD, NEW JERSEY.

PRINTING-MACHINE.

SPECIFICATION forming part of Letters Patent No. 298,781, dated May 20, 1884.

Application filed August 21, 1883. (No model.)

To all whom it may concern:

Be it known that I, WALTER SCOTT, a subject of the Queen of Great Britain, residing at Plainfield, in the county of Union and State of New Jersey, have invented a new and useful Improvement in Printing-Machines, of which the following is a specification.

My invention relates to that class of devices which are used to control the action of the impression-cylinder of stop-cylinder presses; and the object of my invention is to provide a mechanism for stopping the impression-cylinder, for starting it at the proper time, to cause it to register with the rack on the bed, and for holding it stationary when it becomes necessary to pass the form beneath the inking-rollers more than once for each impression taken. This object I accomplish by the mechanism illustrated in the accompanying drawings, in which—

Figure 1 is a side view of a portion of a press with my invention applied thereto. Fig. 2 is a plan view of the same. Fig. 3 is a view on an enlarged scale of certain details of construction. Fig. 4 is a side view of a modification of my invention, and Fig. 5 is a view on an enlarged scale of certain details of construction in said modification.

Similar letters refer to similar parts throughout the several views.

It will be understood that the form-bed is driven in the ordinary manner by a toothed wheel, which engages with a rack on the base of the press, and also with a rack on the under side of the form-bed, motion being imparted to the toothed wheel by a rod, one end of which is secured to the main crank while the other end is connected to the axle of the toothed wheel. It will also be understood that the impression-cylinder is driven by a rack on one side of the form-bed, which meshes with a gear-wheel secured to one end of the cylinder, and that in order to prevent any retrograde movement of the cylinder when the bed is traveling backward the teeth of the gear-wheel by which it is driven are cut away, so that the rack on the bed moves under the gear-wheel without turning it, thus leaving the cylinder stationary.

A is the base of the press, and B B are the side frames. A three-armed lever, C, is studded to the side frame of the press at *a*. Two of the arms of this lever C carry friction-rollers, as *b* and *c*, which bear upon the cams D and E, mounted on the crank-shaft F, so that as the shaft F is revolved a rocking motion will be imparted to the lever C. The third arm, G, of the lever C projects upward toward the impression-cylinder *i*, and is provided with a groove in which there is fitted a toothed bar, H, arranged to slide up and down in said groove, and adapted to engage with a toothed segment, S, bolted to the end of the impression-cylinder. The cams D and E are so adjusted and are so shaped that just as the bed and cylinder are completing their forward movement they act upon the lever C so as to bring the teeth of the bar H into engagement with the segment S and stop the cylinder at the proper time. The continued rotation of the cams causes the lever to be held stationary until the bed is again about to start on its forward travel when the cams act upon the lever so that it starts the cylinder and throws it into accurate gear with the rack on the bed.

The above is the ordinary operation of the press when a sheet is being printed for every revolution of the crank; but when it is necessary to double-roll the form—that is, to pass it beneath the inking-rollers twice for each impression taken—I employ the following described mechanism: At a point near the lower end of the bar H, I attach the upper link of a toggle-lever, L, the lower link, *d*, of said toggle-lever being pivoted to the arm G of the lever C at the point *e*. This lower link, *d*, projects downward from its pivotal point, and is forked to straddle the hub of the lever C. A shaft, M, so mounted as to run at about right angles to the arm G of the lever C, when the bar H is in engagement with the segment S, carries a downwardly-projecting arm, *f*, which is arranged to bear against a collar, *g*, on a sliding rod, K, mounted in a box, *h*, as shown in Fig. 2. This rod is pivoted to a stirrup, N, which is connected to the lower ends of the toggle-lever L. By this arrangement the bar H is normally held in position to engage with the segment S; but if the shaft should be rotated and the arm *f* moved toward the toggle-lever, the bar H would be free to drop down within the groove in the arm G of the lever C.

The movement of the shaft M is controlled by a beveled gear, *k*, which engages with a segmental beveled gear, *l*, secured to a rock-shaft, O, which reaches across the press and carries arms *m*, *n*, and *o*. Upon a short shaft, P, there is secured a beveled gear-wheel, *p*, which meshes with a similar beveled gear-wheel, *q*, mounted on the longitudinal shaft, Q, said shaft being arranged to revolve once for every revolution of the crank-shaft. A gear, R, is studded to the frame of the press in such position as to engage with a gear, *r*, one-half the diameter of R, said gear *r* being carried by the shaft P. A cam, *s*, which is arranged so as to be secured to the gear R by a set-screw or bolt, is loosely mounted on the stud *t*, which carries the gear R. A connecting-rod, T, one end of which is forked to straddle the stud *t*, reaches and is secured to the arm *m* of the rock-shaft O. A friction-roller, *u*, which is carried by the rod T, runs in contact with the cam *s*, so that when the cam is secured to the gear R a rocking motion will be imparted to the rock-shaft O, and consequently the shaft M will be partially rotated and the teeth of the bar H will be withdrawn from engagement with the segment S; but before the teeth of the bar H have been entirely withdrawn from engagement with the segment S, a catch-lever, U, which is pivoted to the frame B at *u'*, and connected by the rod *v* to the arm *o* of the rock-shaft O, will have been thrown into engagement with the slot *w*, formed in the block V, which is bolted to the end of the impression-cylinder. As the gear R, which carries the cam *s*, is twice the diameter of the gear *r*, and as said gear *r* revolves once for every revolution of the crank it will be seen that at each second revolution of the crank-shaft the sliding bar H will be out of engagement with the segment S, and the impression-cylinder will be held firmly in position by the catch-lever U, while the form-bed is passing beneath the inking-rollers.

When it is desired to reciprocate the form more than twice for each revolution of the cylinder, or at the will of the operator, the following mechanism is employed: A short rock-shaft, W, carrying two arms, *a'* and *b'*, is journaled in the frame of the press at *c'*. The arm *a'* passes beneath the foot-treadle A' and the arm *b'* is connected by the rod *o'* to the arm *n* of the rock-shaft O, so that when the foot-treadle is depressed the rock-shaft will be partially rotated, and with it the shaft M, whereby the bar H will be lowered and the catch-lever U brought into engagement with the slot *w*. It is evident that the parts can be held in this position as long as is necessary for the proper inking of the form.

To prevent the depression of the arm *a'*, except at proper times, and to hold the parts in position until it is time to release them, I employ the following mechanism: On the shaft P there are mounted two cams, *d'* and *e'*, the cam *d'* being arranged to bear against the friction-roller *f'*, carried on the end of the connecting-rod *g'*, said rod being slotted so as to embrace the shaft P. The other end of the rod *g'* is pivoted to the arm *h'* of the rock-shaft B', which carries a second arm, *i'*, formed in the shape of a hook, and arranged to engage with a catch, *k'*, on the arm *b'* of the rock-shaft W. The cam *d'* is timed so as to actuate the rod *g'* just prior to the commencement of the retrograde movement of the bed, and the hook *i'* is then drawn up by the action of the cam, and the treadle can be depressed, which movement would throw the arm *b'* over and turn the shaft M, thereby withdrawing the bar H from engagement with the segment S and bringing the catch-lever U into engagement with the slot *w*, as has been before stated. As the arm *b'* is thrown over by the rotation of the shaft W, its catch *k'* is caught by the hook *l'*, formed in one of the arms of a rock-shaft, L', the other arm of said rock-shaft being connected by the rod *m'* to the cam *e'* on the shaft P, which cam is so timed as to move the rod *m'* and thereby raise the hook *l'* just prior to the starting of the bed on its forward travel, when, if the treadle is released, the parts are returned to their normal position by the action of a spring or of a weight, Z, as shown in the drawings, it being understood that the weight could be attached to any appropriate place.

In Figs. 4 and 5 I have shown a modification of my invention, wherein I dispense with the three-armed lever, and substitute therefor a simple lever, G, which is pivoted to the frame B at *a*. As in the arrangement hereinbefore described, the lever G is grooved to receive a toothed bar, H, which engages with the segment S on the end of the impression-cylinder. The lever G is jointed to a sliding bar, C, which is carried by a box, *x*, loosely mounted on the crank-shaft F. The friction-rollers *b* and *c*, which are secured to the sliding bar C run in contact with the cams D and E, and these cams are so shaped and timed that they move the sliding bar C, and with it the lever G at proper times to start and stop the impression-cylinder. In this modified arrangement I have shown a simple toggle-lever, L, one member of which is jointed to the toothed bar H, while the other member is jointed to the lever G. To the middle joint of this toggle-lever L there is pivoted an arm, I, which projects inward toward the center of the press, and has an elongated slot, *l'*, formed in its free end. A shaft, M, is journaled so as to run at right angles to the rock-shaft O, with which it is connected by the beveled gears *k* and *l*. The action of the rock-shaft O is controlled by the mechanism hereinbefore described. Secured to the shaft M is an arm, K', the upper end or nose of which engages with the slot *l'*, formed in the arm I. It will be seen that the turning of the rock-shaft O will rotate the shaft M, thereby drawing out the center joint of the toggle-lever L and lowering the bar H, The catch-

lever U is operated in the same manner as in the arrangement which I have more specifically described.

I do not claim herein any of the devices shown and described in my application No. 91,243, except when such devices are used, as described herein, in combination with a toggle-lever for operating the sliding bar H.

What I claim as my invention, and desire to secure by Letters Patent, is—

1. The combination, with the impression-cylinder, of a lever-arm, as G, a toothed sliding bar, as H, toggle-lever, as L, and a mechanism, substantially as described, for actuating said toggle-lever, substantially as described.

2. The combination, with the impression-cylinder, of a lever-arm, as G, a toothed sliding rod, as H, a toggle-lever, as L, the lower link of which is forked to straddle the hub of the lever C, and a mechanism, substantially as described, for actuating said toggle-lever, substantially as described.

3. The combination, with the impression-cylinder, of a lever-arm, as G, bar, as H, toggle, as L, and its actuating mechanism, substantially as described, a lever, as U, and a mechanism, substantially as described, for operating the parts at every second revolution of the crank-shaft.

4. The combination, with the impression-cylinder, of a lever-arm, as G, bar, as H, toggle, as L, a mechanism, substantially as described, for operating the parts so that the form-bed can be reciprocated any number of times for each impression taken, and a mechanism, substantially as described, for preventing the tripping of the parts except at proper times.

5. The combination, with the impression-cylinder, of a lever-arm, as G, a bar, as H, toggle, as L, lever, as U, and their actuating mechanism, substantially as described, a mechanism, substantially as described, for operating the parts so that the form-bed can be reciprocated any number of times for each impression taken, and a mechanism, substantially as described, for preventing the return of the parts except at proper times, substantially as described.

6. The combination, with the impression-cylinder, of a lever-arm, as G, a sliding rod, as H, a toggle-lever, as L, the lower link of which is a lever of the first order, and a mechanism, substantially as described, for actuating said toggle-lever, substantially as described.

WALTER SCOTT.

Witnesses:
EDWARD H. CARPENTER,
EDWARD KENT, Jr.