US 20130108043A1

(19) United States

(12) Patent Application Publication

SELEZNEV et al.

(10) Pub. No.: US 2013/0108043 A1

(43) Pub. Date: May 2, 2013

(54) **METHOD AND APPARATUS FOR PROVIDING BROADCAST SERVICE USING ENCRYPTION KEY IN A COMMUNICATION SYSTEM**

(71) Applicant: **Samsung Electronics Co. Ltd.**, Suwon-si (KR)

(72) Inventors: **Sergey Nikolayevich SELEZNEV**, Suwon-si (KR); **Byung-Rae LEE**, Seoul (KR); **Sung-Oh HWANG**, Yongin-si (KR); **Kook-Heui LEE**, Suwon-si (KR)

(73) Assignee: **Samsung Electronics Co. Ltd.**, Suwon-si (KR)

(21) Appl. No.: **13/712,163**

(22) Filed: **Dec. 12, 2012**

Related U.S. Application Data

(63) Continuation of application No. 12/418,141, filed on Apr. 3, 2009, now Pat. No. 8,363,840.

(30) **Foreign Application Priority Data**

Apr. 4, 2008 (KR) 10-2008-0031885

Publication Classification

(51) **Int. Cl.**
H04L 9/08 (2006.01)

(52) **U.S. Cl.**
CPC ***H04L 9/08*** (2013.01)
USPC **380/255**

(57) **ABSTRACT**

A method and apparatus for receiving a broadcast service in a communication system is provided. The method includes receiving a key pair comprising a first key and a second key from a network, generating at least one of encryption keys using the key pair, receiving encrypted broadcast service data broadcasted from the network, and decrypting the encrypted broadcast service data broadcasted using the at least one of encryption keys.

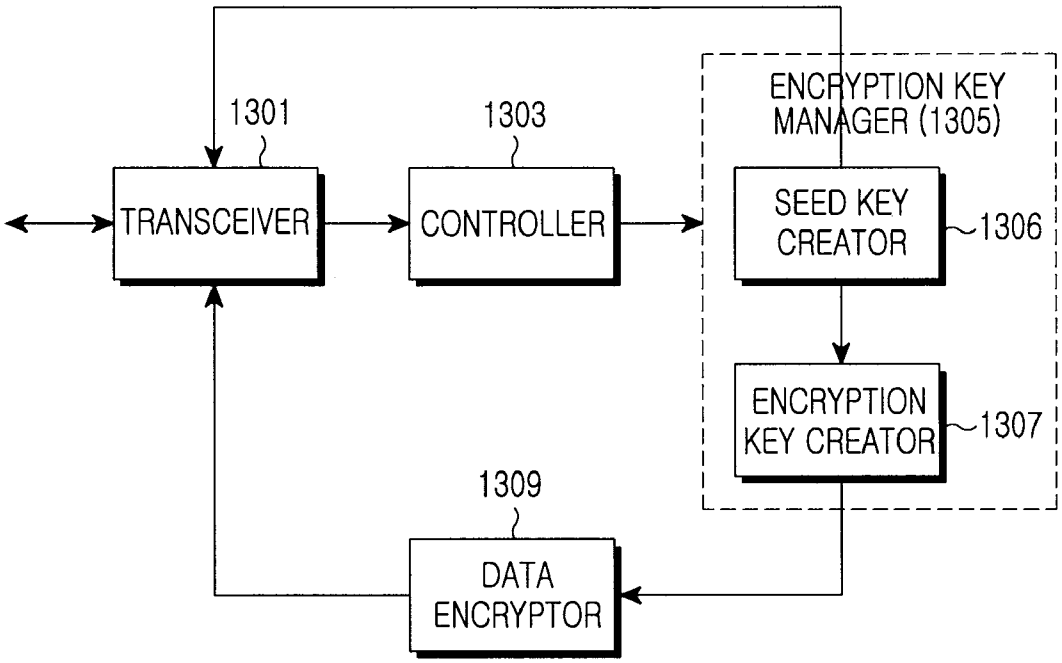

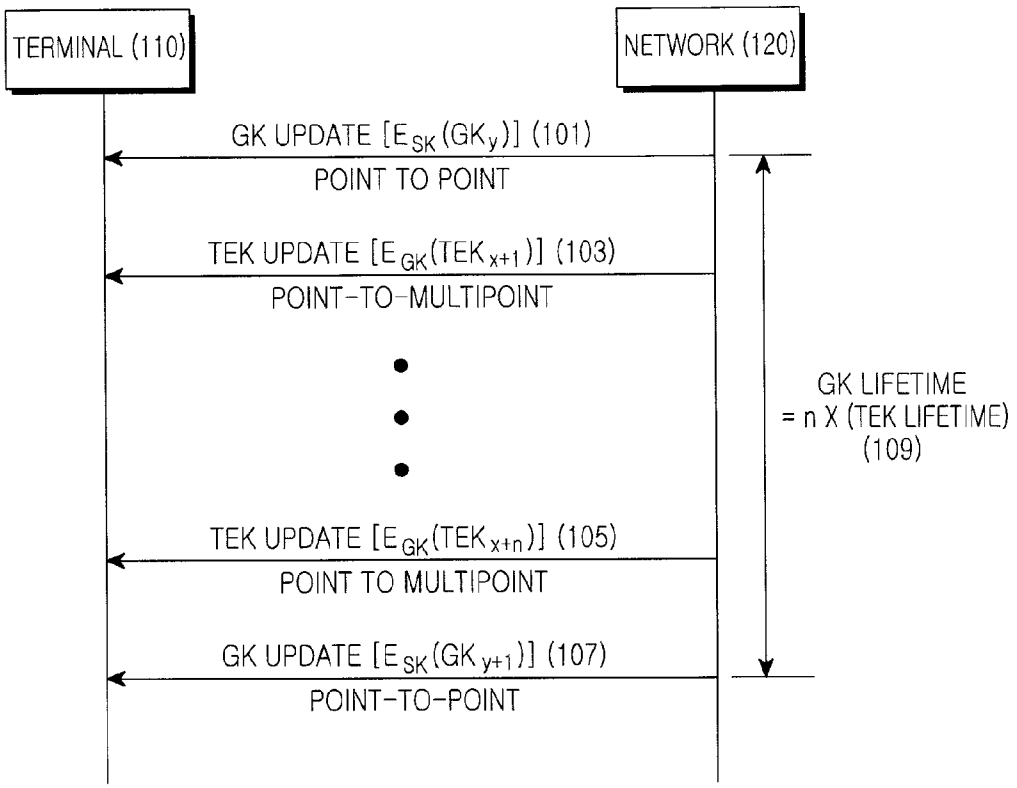

FIG. 1
(CONVENTIONAL ART)

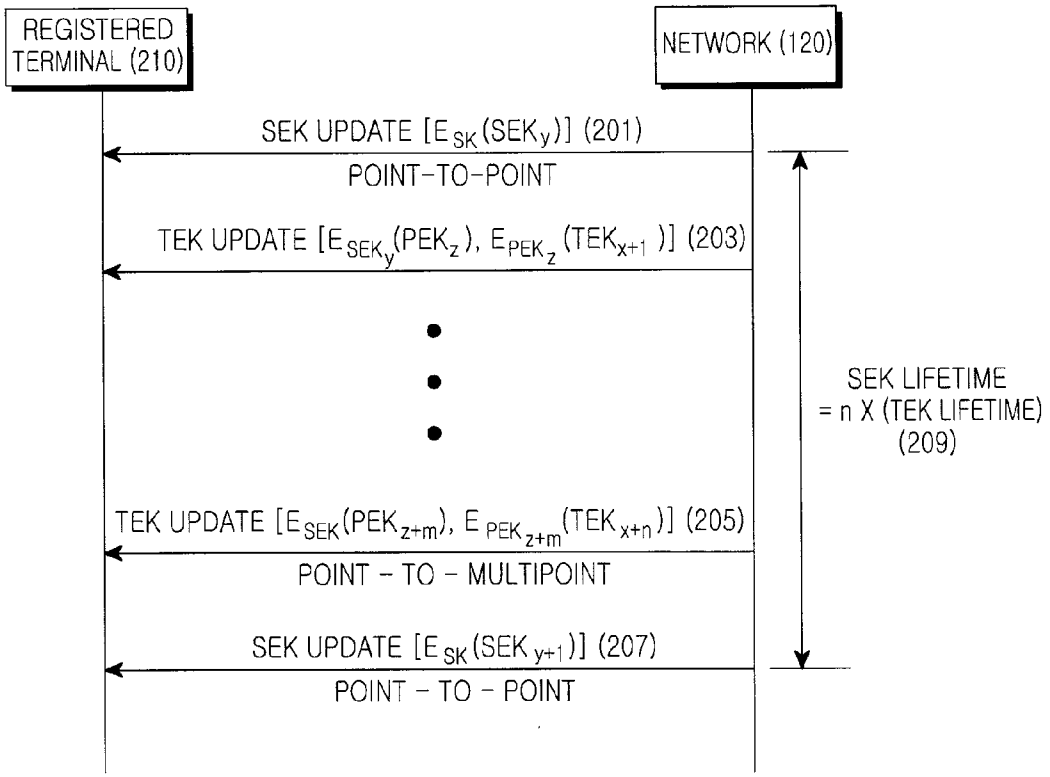

FIG.2
(CONVENTIONAL ART)

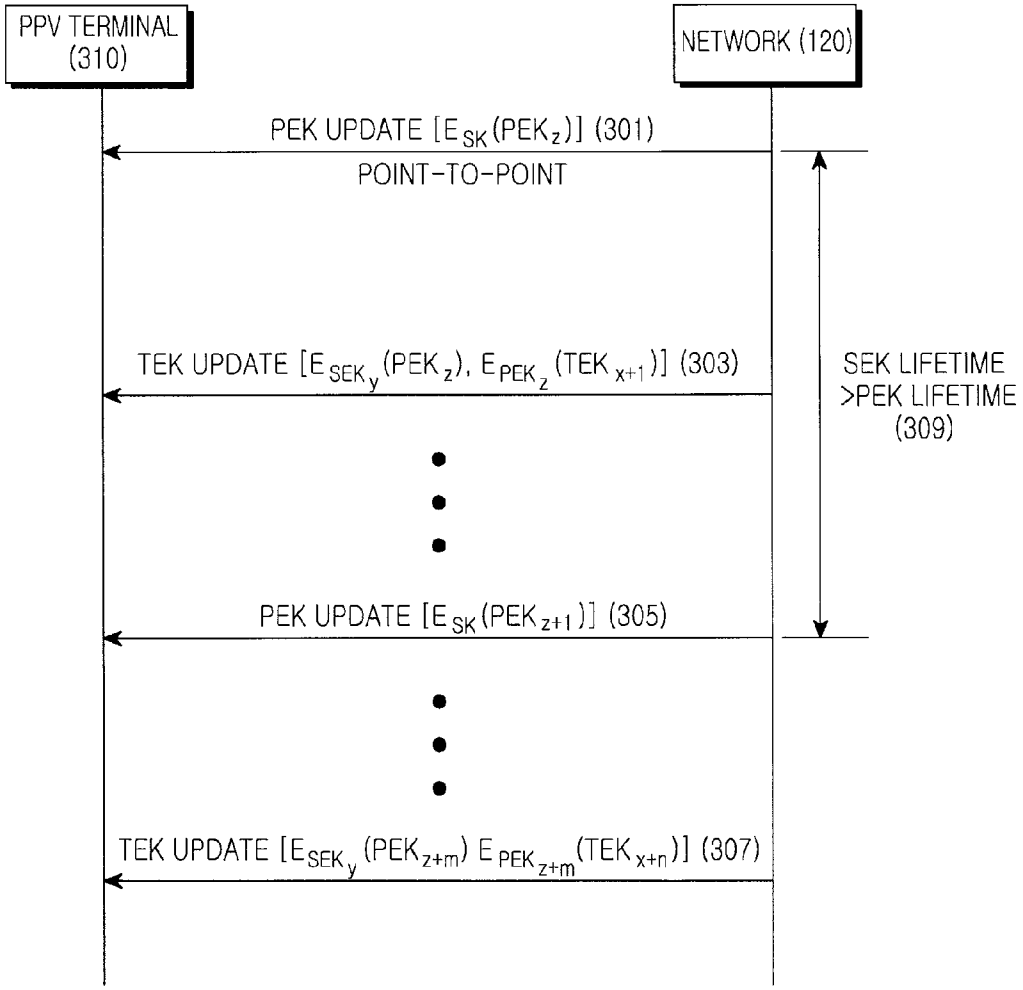

FIG.3
(CONVENTIONAL ART)

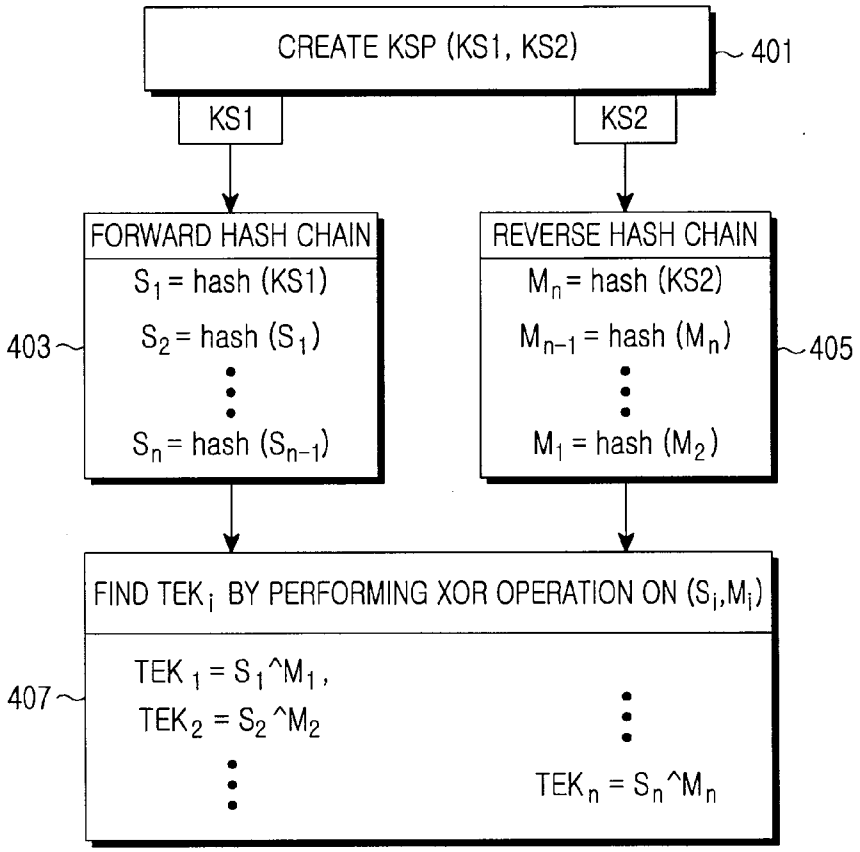
CREATE KSP (KS1, KS2)
401
KS1
KS2
FORWARD HASH CHAIN
S_1 = hash (KS1)
S_2 = hash (S_1)
S_n = hash (S_{n-1})
403
REVERSE HASH CHAIN
M_n = hash (KS2)
M_{n-1} = hash (M_n)
M_1 = hash (M_2)
405
FIND TEK_i BY PERFORMING XOR OPERATION ON (S_i,M_i)
$TEK_1 = S_1 \wedge M_1$,
$TEK_2 = S_2 \wedge M_2$
$TEK_n = S_n \wedge M_n$
407

FIG.4

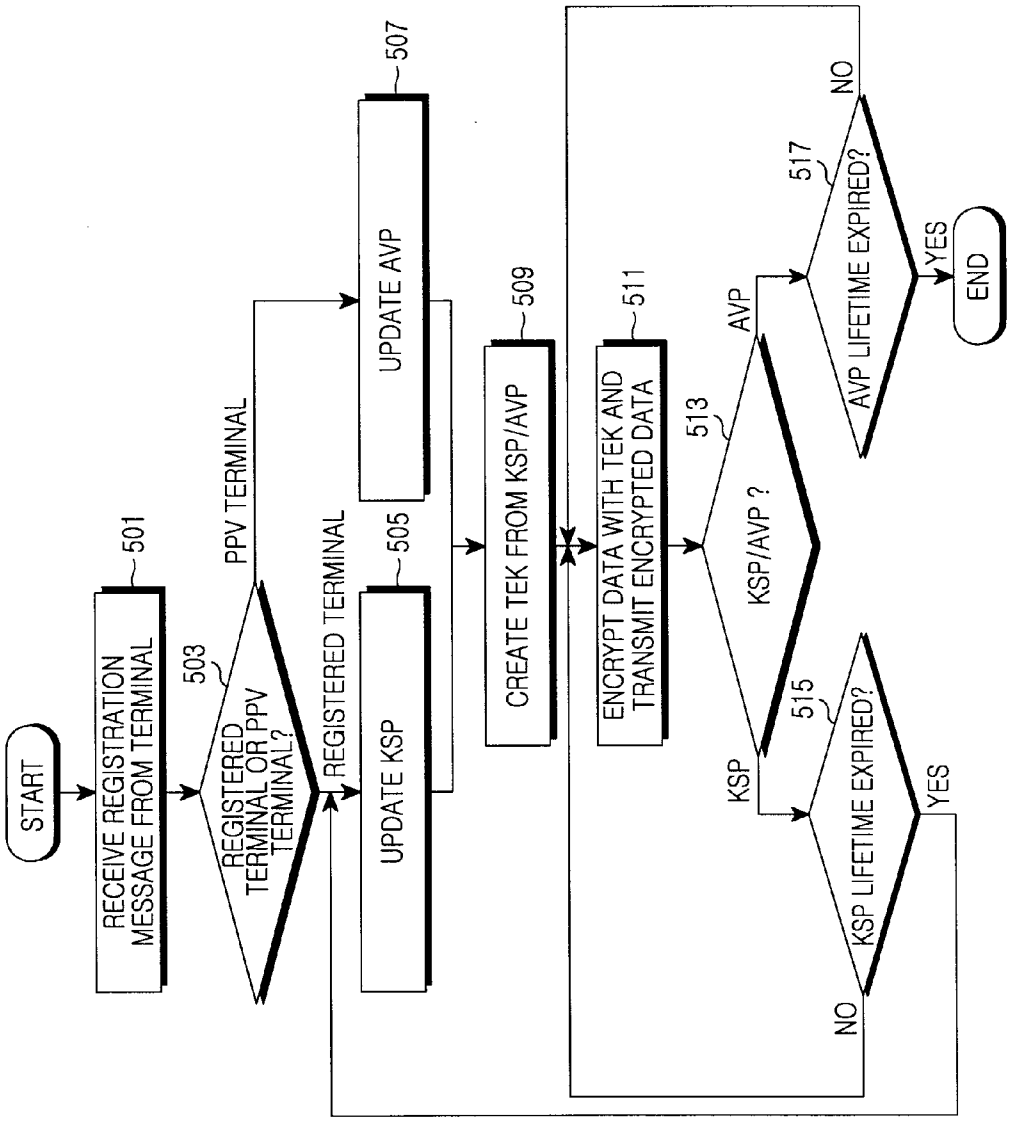
START
RECEIVE REGISTRATION MESSAGE FROM TERMINAL
501
REGISTERED TERMINAL OR PPV TERMINAL?
503
PPV TERMINAL
REGISTERED TERMINAL
UPDATE AVP
507
UPDATE KSP
505
CREATE TEK FROM KSP/AVP
509
ENCRYPT DATA WITH TEK AND TRANSMIT ENCRYPTED DATA
511
KSP/AVP ?
513
AVP
KSP
AVP LIFETIME EXPIRED?
517
NO
YES
END
KSP LIFETIME EXPIRED?
515
NO
YES

FIG.5

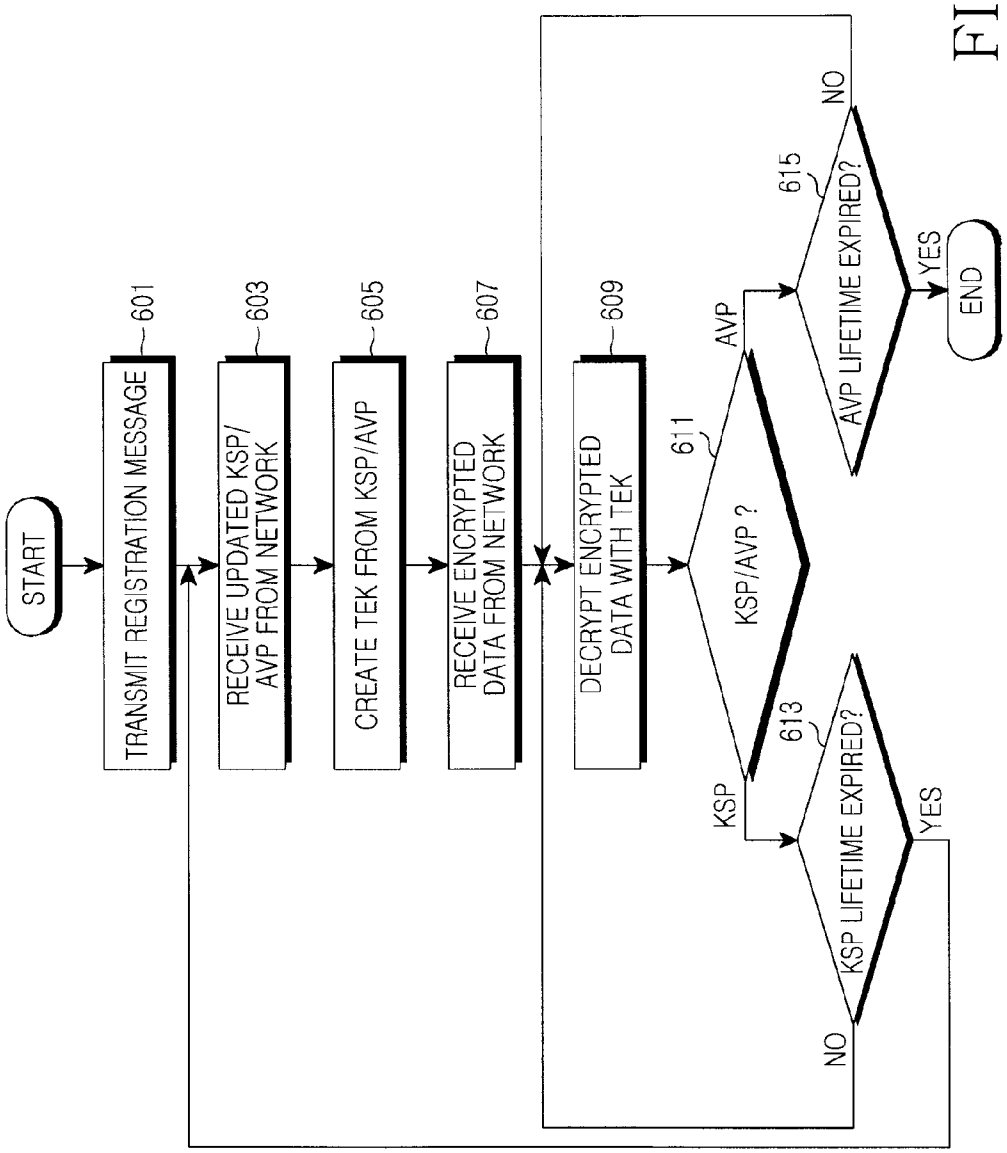
START
TRANSMIT REGISTRATION MESSAGE
601
RECEIVE UPDATED KSP/ AVP FROM NETWORK
603
CREATE TEK FROM KSP/AVP
605
RECEIVE ENCRYPTED DATA FROM NETWORK
607
DECRYPT ENCRYPTED DATA WITH TEK
609
KSP/AVP ?
611
KSP
AVP
KSP LIFETIME EXPIRED?
613
NO
YES
AVP LIFETIME EXPIRED?
615
NO
YES
END

FIG.6

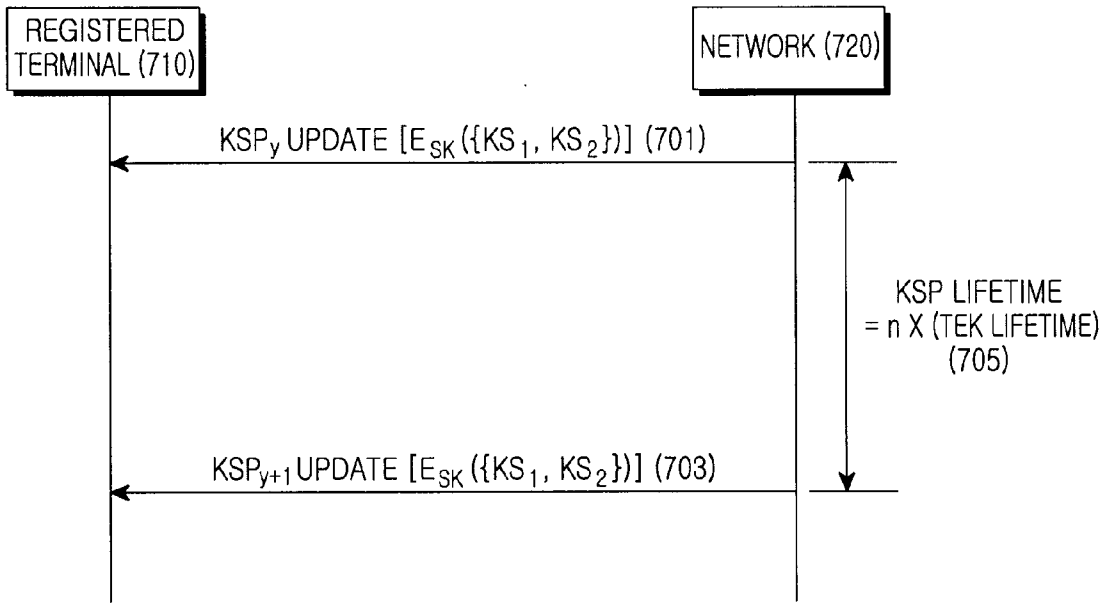
REGISTERED TERMINAL (710)
NETWORK (720)
KSPy UPDATE [ESK({KS1, KS2})] (701)
KSP LIFETIME = n X (TEK LIFETIME) (705)
KSPy+1 UPDATE [ESK({KS1, KS2})] (703)

FIG.7

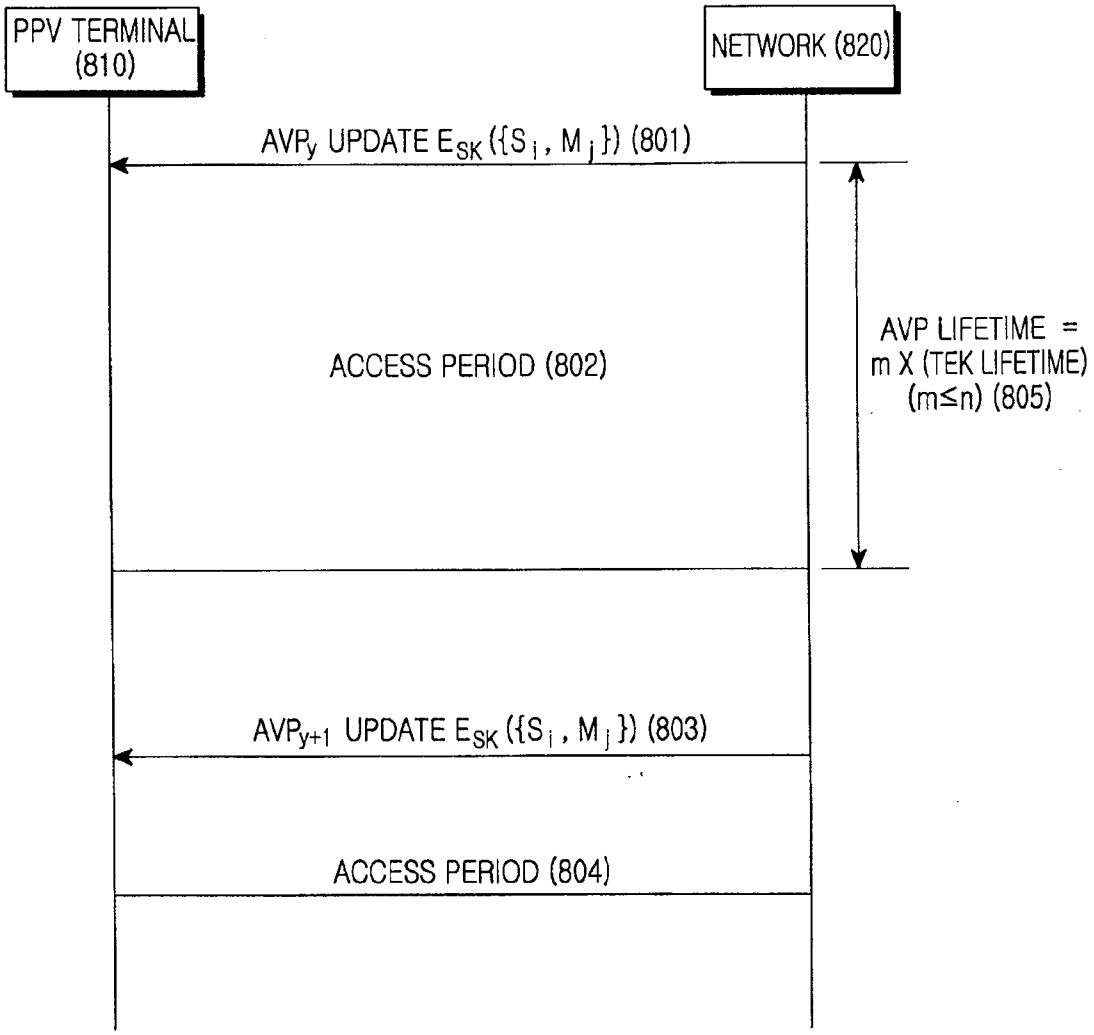
PPV TERMINAL (810)
NETWORK (820)
AVPy UPDATE ESK({Si, Mj}) (801)
ACCESS PERIOD (802)
AVP LIFETIME = m X (TEK LIFETIME) (m≤n) (805)
AVPy+1 UPDATE ESK({Si, Mj}) (803)
ACCESS PERIOD (804)

FIG.8

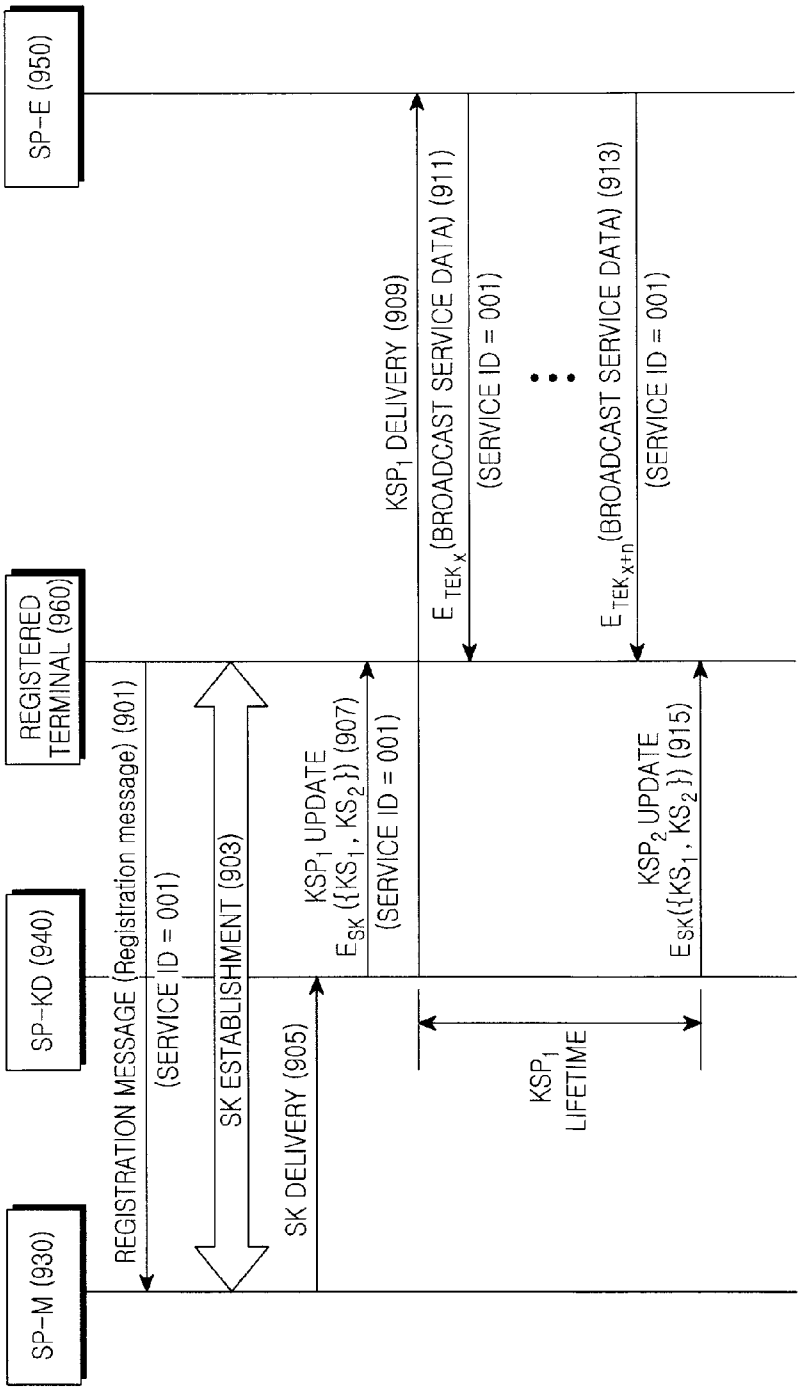
SP-M (930)
SP-KD (940)
REGISTERED TERMINAL (960)
SP-E (950)
REGISTRATION MESSAGE (Registration message) (901)
(SERVICE ID = 001)
SK ESTABLISHMENT (903)
SK DELIVERY (905)
KSP1 UPDATE
ESK ({KS1, KS2}) (907)
(SERVICE ID = 001)
KSP1 DELIVERY (909)
ETEKx(BROADCAST SERVICE DATA) (911)
(SERVICE ID = 001)
ETEKx+n(BROADCAST SERVICE DATA) (913)
(SERVICE ID = 001)
KSP2 UPDATE
ESK({KS1, KS2}) (915)
KSP1 LIFETIME

FIG.9

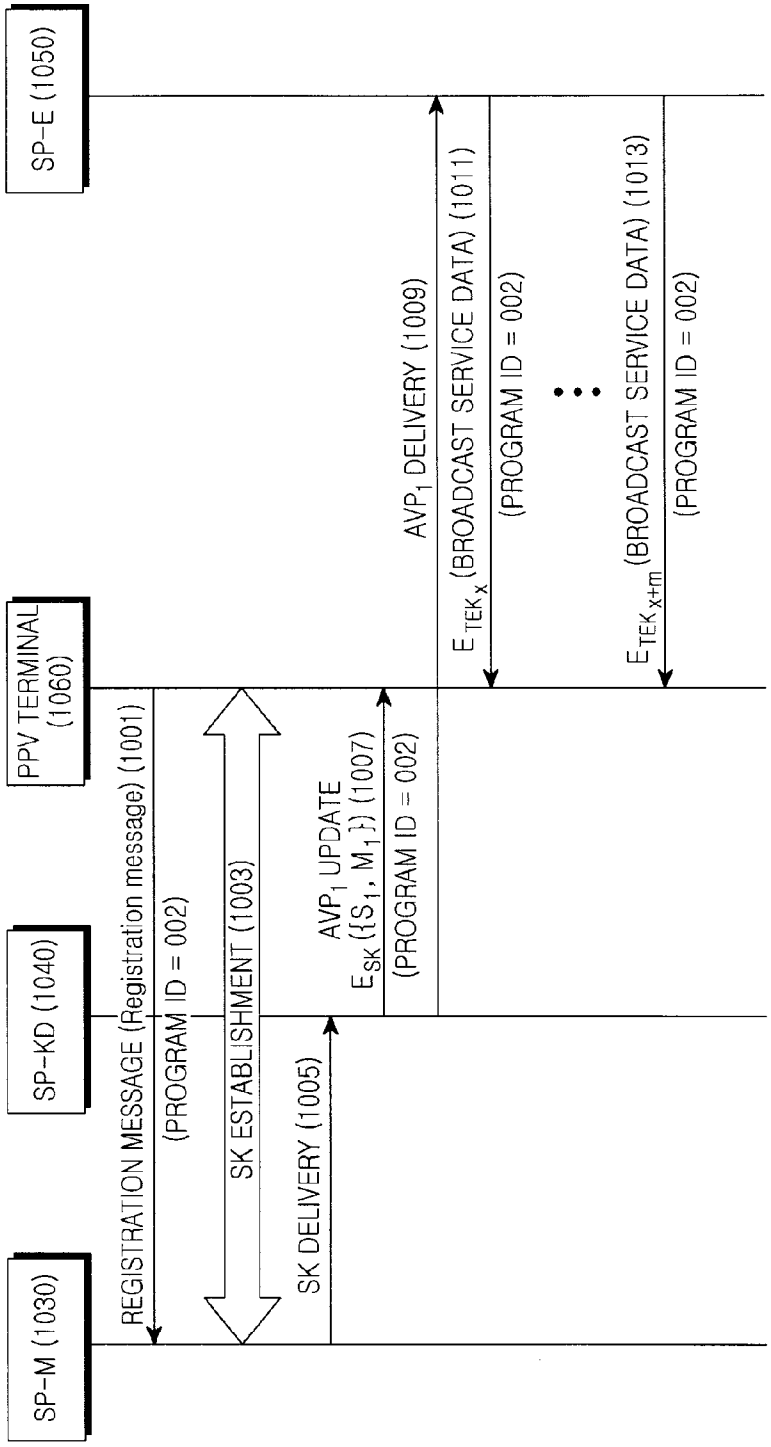
SP-M (1030)
SP-KD (1040)
PPV TERMINAL (1060)
SP-E (1050)
REGISTRATION MESSAGE (Registration message) (1001)
(PROGRAM ID = 002)
SK ESTABLISHMENT (1003)
SK DELIVERY (1005)
AVP1 UPDATE
ESK ({S1, M1}) (1007)
(PROGRAM ID = 002)
AVP1 DELIVERY (1009)
ETEKx (BROADCAST SERVICE DATA) (1011)
(PROGRAM ID = 002)
ETEKx+m (BROADCAST SERVICE DATA) (1013)
(PROGRAM ID = 002)

FIG.10

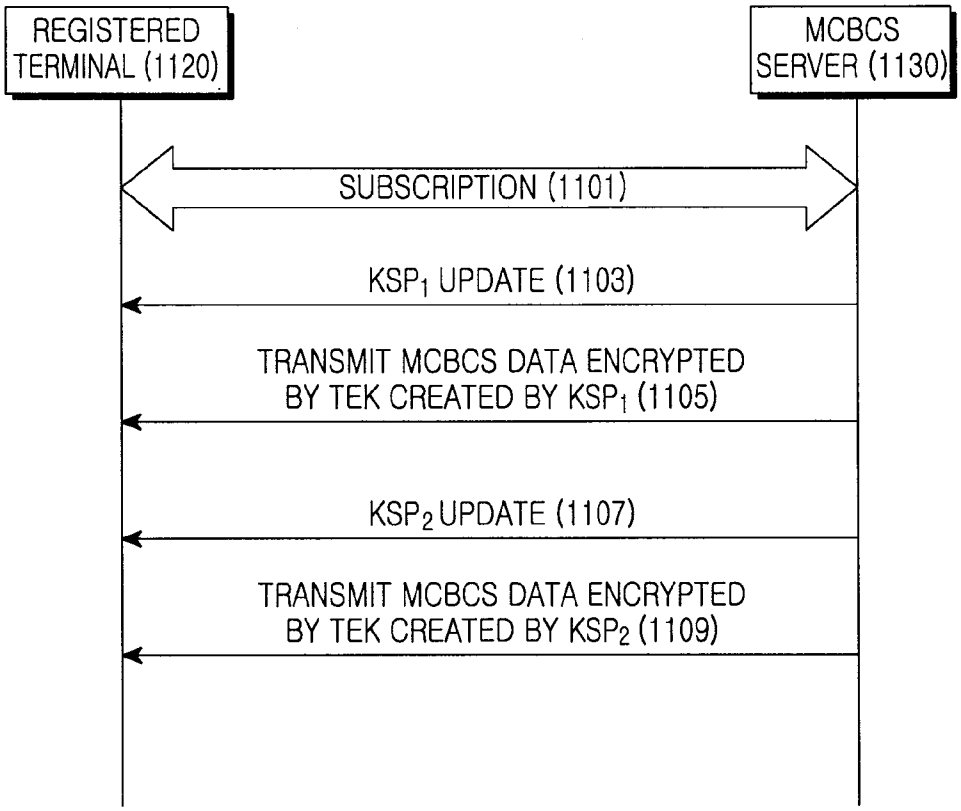
REGISTERED TERMINAL (1120)
MCBCS SERVER (1130)
SUBSCRIPTION (1101)
KSP1 UPDATE (1103)
TRANSMIT MCBCS DATA ENCRYPTED BY TEK CREATED BY KSP1 (1105)
KSP2 UPDATE (1107)
TRANSMIT MCBCS DATA ENCRYPTED BY TEK CREATED BY KSP2 (1109)

FIG.11

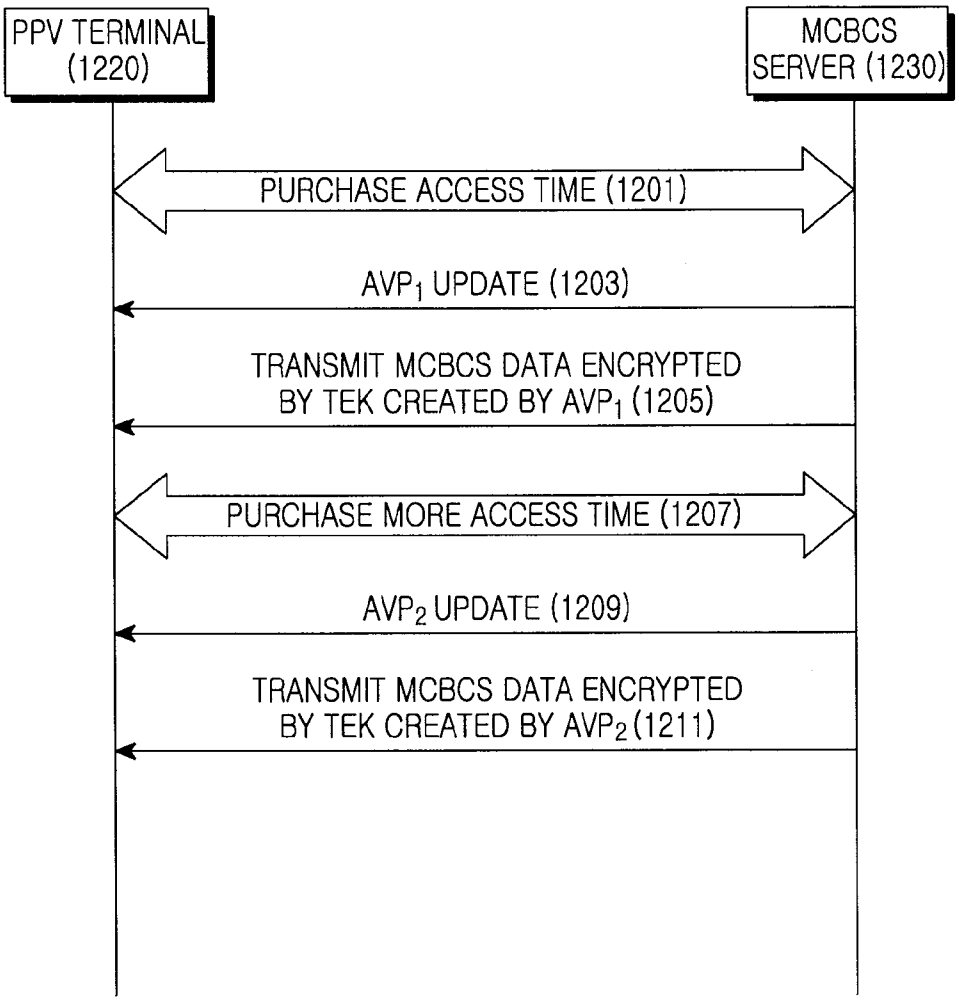
PPV TERMINAL (1220)
MCBCS SERVER (1230)
PURCHASE ACCESS TIME (1201)
AVP1 UPDATE (1203)
TRANSMIT MCBCS DATA ENCRYPTED BY TEK CREATED BY AVP1 (1205)
PURCHASE MORE ACCESS TIME (1207)
AVP2 UPDATE (1209)
TRANSMIT MCBCS DATA ENCRYPTED BY TEK CREATED BY AVP2 (1211)

FIG.12

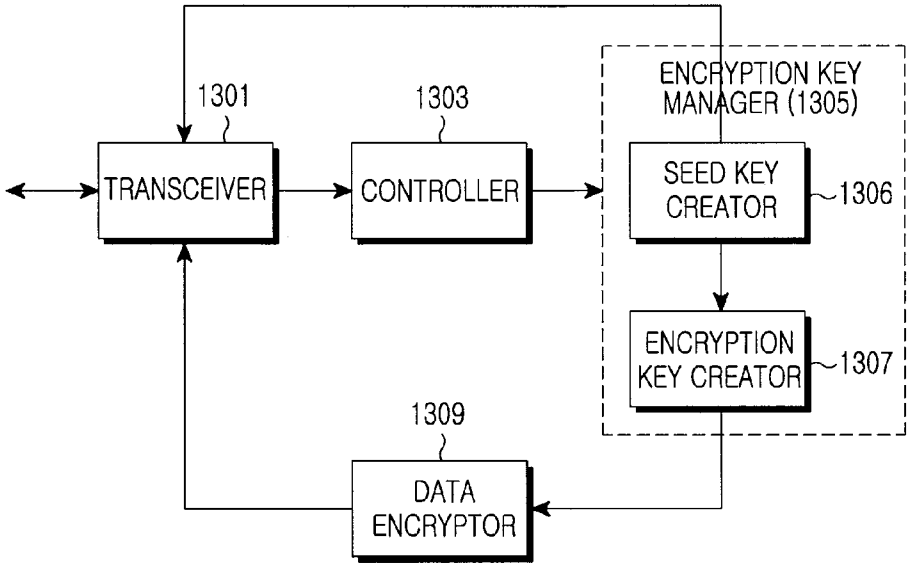
1301
1303
ENCRYPTION KEY MANAGER (1305)
TRANSCEIVER
CONTROLLER
SEED KEY CREATOR
1306
ENCRYPTION KEY CREATOR
1307
1309
DATA ENCRYPTOR

FIG.13

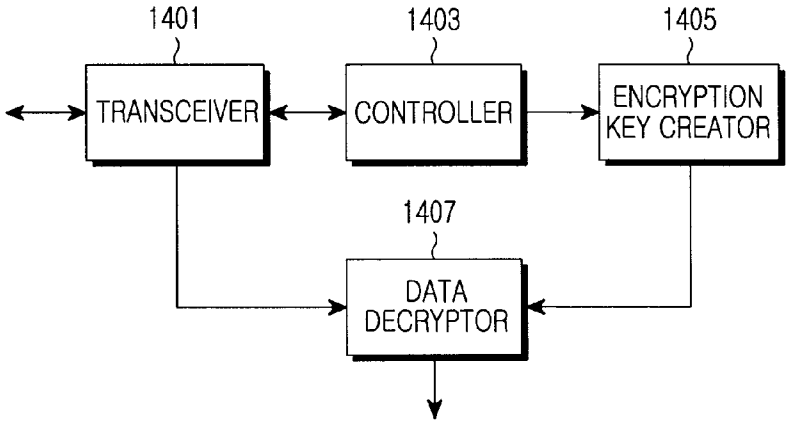
1401
1403
1405
TRANSCEIVER
CONTROLLER
ENCRYPTION KEY CREATOR
1407
DATA DECRYPTOR

FIG.14

METHOD AND APPARATUS FOR PROVIDING BROADCAST SERVICE USING ENCRYPTION KEY IN A COMMUNICATION SYSTEM

PRIORITY

[0001] This application is a continuation of prior application Ser. No. 12/418,141, filed on Apr. 3, 2009, which claims the benefit under 35 U.S.C. §119(a) of a Korean patent application filed in the Korean Intellectual Property Office on Apr. 4, 2008 and assigned Serial No. 10-2008-0031885, the entire disclosure of which is hereby incorporated by reference.

BACKGROUND OF THE INVENTION

[0002] 1. Field of the Invention

[0003] The present invention relates to broadcast services in a communication system. More particularly, the present invention relates to a method and apparatus for offering broadcast services using encryption keys in a communication system.

[0004] 2. Description of the Related Art

[0005] Recently, communication systems have been developed to offer a variety of multimedia services to users. Accordingly, broadcast and multicast services may be used to provide diverse contents to users. The broadcast and multicast services will be referred to herein as "broadcast services."

[0006] The term "broadcast service" refers to a point-to-multipoint service in which one source object transmits multimedia data, such as audio data, image data and/or video data, to a plurality of recipients within its service coverage based on a uni-directional bearer service. The broadcast service supports a broadcast mode and a multicast mode. In the broadcast mode, data is broadcasted to all users in the service coverage. On the other hand, in the multicast mode, users have to subscribe to a particular service or service group provided by a Service Provider (SP) in order to enjoy multicast services.

[0007] In the multicast mode, broadcast service data is encrypted before transmission so that it may be delivered only to the users who have subscribed to the broadcast service. The transmitted encrypted data must be decrypted by the users prior its use. Therefore, encryption keys, used by the service provider in encrypting broadcast data, should be shared with the users. A description will now be made of an encryption key management for broadcast service data between a service provider and users in a conventional communication system.

[0008] FIG. **1** illustrates an encryption key management in a conventional broadcast service system. The encryption key management method occurs between a network and a terminal in a broadcast service system based on Worldwide Interoperability for Microwave Access (WiMax), i.e., Institute of Electrical and Electronics Engineers (IEEE) standard 802.16. For reference, the encryption key management described in connection with FIG. **1** can be similarly applied to a 3rd Generation Partnership Project (3GPP) broadcast system. Before a detailed description of the encryption key management is given, factors used for encryption key management will be described below.

[0009] A Traffic Encryption Key (TEK) is used to encrypt service content data. The TEK is periodically updated and transmitted to a terminal(s) having a Group Key (GK) defined below. The terminal receives the TEK and can decrypt data encrypted with a TEK using the received TEK.

[0010] The Group Key (GK) is a key shared among terminals that have subscribed to a broadcast service. The GK, commonly created in a network, can be periodically updated and transmitted to terminals that have subscribed to a particular service group.

[0011] A Security Key (SK) is mutually shared by a network and a terminal that has subscribed to a broadcast service, through a certain setting process. The SK is used by the network to encrypt and transmit a GK or the like.

[0012] A detailed description of FIG. **1** will now be made based on factors used for encryption key management.

[0013] Referring to FIG. **1**, a network **120** encrypts a GK and transmits the GK to a terminal **110** in step **101**. The GK is encrypted with an SK and transmitted to each terminal **110** on a point-to-point basis. The resulting key is indicated by $E_{SK}(GK_y)$, where a subscript "y" indicates an order in which the GK is updated when a broadcast service call is connected. That is, the resulting the key is y-th updated in an arbitrary call.

[0014] In step **103**, the network **120** updates a TEK with the GK_y and transmits the resulting key TEK_{x+1} to the terminal **110** on a point-to-multipoint basis. The network **120** encrypts actual content data using the TEK_{x+1}, and the terminal **110** decrypts the encrypted data using the TEK_{x+1}. Since the TEK is set shorter than the GK in a lifetime, the TEK is more frequently updated compared with the GK. In step **105**, the TEK is encrypted and updated by a GK_y and the resulting key TEK_{x+n} is transmitted to the terminal **110**. That is, the TEK undergoes n update processes from the process for the TEK_{x+1} of step **103** through the process for the TEK_{x+n} of step **105**. Here, the same GK_y is used in steps **103** and **105**. In step **107**, as the lifetime of the GK **109** expires, a new GK is updated and transmitted to the terminal **110** on a point-to-point basis. As a result, the TEK is encrypted and updated with a newly updated GK_{y+1}.

[0015] With reference to FIGS. **2** and **3**, a description will now be made of a conventional encryption key management in an Open Mobile Alliance BroadCAST (OMA BCAST) system. FIG. **2** illustrates an encryption key management for a registered terminal, and FIG. **3** illustrates an encryption key management for a Pay-Per-View (PPV) terminal. The "registered terminal" refers to a terminal that subscribes to a particular broadcast service for a relatively long time, while the "PPV terminal" refers to a terminal that subscribes to a service in units of a short time, e.g. in units of specific programs. For example, a terminal, which has purchased a one-month coupon for an arbitrary broadcast service, may correspond to the registered terminal. A terminal, which has purchased a coupon for a single drama at a particular date, corresponds to the PPV terminal. A length of the subscription period is variable.

[0016] In the OMA BCAST, a Service Encryption Key (SEK) and a Program Encryption Key (PEK) are further used in addition to the keys used in the WiMax of FIG. **1**. The SEK is used to encrypt a particular broadcast service, and the PEK is used to encrypt a particular program. For example, the broadcast service can be provided by a service provider, and the program can be a particular program provided by the service provider.

[0017] Encryption key management in a registered terminal will first be described with reference to FIG. **2**.

[0018] FIG. **2** illustrates an encryption key management in a registered terminal in a conventional OMA BCAST.

[0019] Referring to FIG. **2**, a network **120** updates an SEK with an SK and transmits a resulting key SEK_y to a registered terminal **210** in step **201**. In step **203**, the network **120** encrypts a PEK_z with the updated SEK_y, updates a TEK with the encrypted PEK_z, and transmits the resulting key TEK_{x+1} to the registered terminal **210**. The network **120** encrypts content data with the updated TEK_{x+1} and transmits the encrypted data. The registered terminal **210** decrypts the transmitted encrypted data using the transmitted updated TEK_{x+1}. When a lifetime of the TEK_{x+1} expires, the network **120** updates the TEK again in step **205**. Also, when a lifetime of the SEK_y **209** expires, the network **120** updates a SEK with an SK and transmits the resulting key SEK_{y+1} to the registered terminal **210** in step **207**. The SEK_{y+1} is then used for encryption of the PEK.

[0020] With reference to FIG. **3**, a description will now be made of an encryption key management in a PPV terminal. FIG. **3** illustrates an encryption key management in a PPV terminal in a conventional OMA BCAST.

[0021] Referring to FIG. **3**, a network **120** encrypts a PEK_z with an SK at an arbitrary time and transmits the encrypted PEK_z to a PPV terminal **310** in step **301**, thereby updating the PEK. In step **303**, the network **120** updates the TEK. That is, the network **120** encrypts the PEK_z with an SEK_y, encrypts a TEK_{x+1} with the PEK_z, and transmits the encrypted keys to the PPV terminal **310**. Thereafter, during a lifetime of the PEK_z, the network **120** encrypts a TEK with the PEK_z to update the TEK in sequence. After a lifetime of the PEK_z expires, the network **120** updates the next PEK (PEK_{z+1}) in step **305**. That is, the network **120** encrypts the PEK_{z+1} with an SK and transmits the encrypted PEK_{z+1} to the PPV terminal **310**. Accordingly, a TEK is encrypted with the PEK_{z+1} to update the TEK until a lifetime of the PEK_{z+1} **309** expires. In step **307**, an nth TEK (TEK_{x+n}) is updated with a PEK_{z+m}.

[0022] As described with reference to FIGS. **1** to **3**, since the network encrypts content data with a TEK and the terminal decrypts the encrypted data with the TEK, the network should update a variety of encryption keys several times, and transmit the updated TEKs to the terminal. In this case, resources consumed between the network and the terminal to update the encryption keys may increase.

[0023] Therefore, a need exists for a method and apparatus for reducing resources in a network when encryption keys are updated.

SUMMARY OF THE INVENTION

[0024] An aspect of the present invention is to address at least the above-mentioned problems and/or disadvantages and to provide at least the advantages described below. Accordingly, an aspect of the present invention is to provide a method and apparatus for reducing a number of resources for creating an encryption key for broadcast service data and transmitting the encryption key to a terminal in a communication system.

[0025] Another aspect of the present invention is to provide a method and apparatus for reducing resources that a network needs to transmit an encryption key for broadcast service data to a terminal in a communication system.

[0026] Still another aspect of the present invention is to provide a method and apparatus in which a terminal receives an encryption key for broadcast service data from a network to create a Traffic Encryption Key (TEK), and decrypts received encrypted data with the TEK in a communication system.

[0027] In accordance with an aspect of the present invention, a method for receiving a broadcast service by a terminal in a communication system is provided. The method includes receiving a key pair comprising a first key and a second key from a network, generating at least one of encryption keys using the key pair, receiving encrypted broadcast service data broadcasted from the network, and decrypting the encrypted broadcast service data broadcasted using the at least one of encryption keys.

[0028] In accordance with another aspect of the present invention, a method for receiving a broadcast service by a terminal in a communication system is provided. The method includes transmitting a registration message including a registration information of the terminal to a network, receiving a key pair comprising a first key and a second key from the network, generating at least one of forward encryption keys by applying a forward hash chain to the first key, generating at least one of reverse encryption keys by applying a reverse hash chain to the second key, generating at least one of encryption keys using the at least one of forward encryption keys and the at least one of reverse encryption keys, receiving encrypted broadcast service data broadcasted from the network, and decrypting the encrypted broadcast service data broadcasted using the at least one of encryption keys.

[0029] In accordance with another aspect of the present invention, an apparatus for receiving a broadcast service in a terminal for a communication system is provided. The apparatus includes a transceiver for receiving a key pair comprising a first key and a second key from a network, an encryption key generator for generating at least one of encryption keys using the key pair, and a data decryptor for decrypting the encrypted broadcast service data broadcasted using the at least one of encryption keys.

[0030] In accordance with another aspect of the present invention, an apparatus for receiving a broadcast service in a terminal for a communication system is provided. The apparatus includes a transceiver for transmitting a registration message including a registration information of the terminal to a network and for receiving a key pair comprising a first key and a second key from a network, an encryption key generator for generating at least one of forward encryption keys by applying a forward hash chain to the first key, for generating at least one of reverse encryption keys by applying a reverse hash chain to the second key, and for generating at least one of encryption keys using the at least one of forward encryption keys and the at least one of reverse encryption keys, and a data decryptor for decrypting the encrypted broadcast service data broadcasted using the at least one of encryption keys.

[0031] Other aspects, advantages, and salient features of the invention will become apparent to those skilled in the art from the following detailed description, which, taken in conjunction with the annexed drawings, discloses exemplary embodiments of the invention.

BRIEF DESCRIPTION OF THE DRAWINGS

[0032] The above and other aspects, features and advantages of certain exemplary embodiments of the present invention will be more apparent from the following description taken in conjunction with the accompanying drawings, in which:

[0033] FIG. **1** illustrates an encryption key management between a network and a terminal in a conventional broadcast service system;

[0034] FIG. **2** illustrates an encryption key management in a registered terminal in a conventional Open Mobile Alliance BroadCAST (OMA BCAST);

[0035] FIG. **3** illustrates an encryption key management in a Pay-Per-View (PPV) terminal in a conventional OMA BCAST;

[0036] FIG. **4** illustrates a creation of encryption keys in a broadcast service system according to an exemplary embodiment of the present invention;

[0037] FIG. **5** illustrates an encryption key management method by a network in a broadcast service system according to an exemplary embodiment of the present invention;

[0038] FIG. **6** illustrates an encryption key management method by a terminal in a broadcast service system according to an exemplary embodiment of the present invention;

[0039] FIG. **7** illustrates an exemplary encryption key management applied to a registered terminal in an OMA BCAST according to an exemplary embodiment of the present invention;

[0040] FIG. **8** illustrates an exemplary encryption key management applied to a PPV terminal in an OMA BCAST according to an exemplary embodiment of the present invention;

[0041] FIG. **9** illustrates an operation of each entity in an encryption key management for a registered terminal in an OMA BCAST according to an exemplary embodiment of the present invention;

[0042] FIG. **10** illustrates an operation of each entity in an encryption key management for a Pay-Per-View (PPV) terminal in an OMA BCAST according to an exemplary embodiment of the present invention;

[0043] FIG. **11** illustrates encryption key management for a registered terminal in a Worldwide Inter-operability for Microwave Access (WiMax) broadcast service system according to an exemplary embodiment of the present invention;

[0044] FIG. **12** illustrates an encryption key management for a PPV terminal in a WiMax broadcast system according to an exemplary embodiment of the present invention;

[0045] FIG. **13** illustrates a network apparatus for managing encryption keys in a broadcast service system according to an exemplary embodiment of the present invention; and

[0046] FIG. **14** illustrates an encryption key management apparatus of a terminal in a broadcast service system according to an exemplary embodiment of the present invention.

[0047] Throughout the drawings, the same drawing reference numerals will be understood to refer to the same elements, features and structures.

DETAILED DESCRIPTION OF EXEMPLARY EMBODIMENTS

[0048] The following description with reference to the accompanying drawings is provided to assist in a comprehensive understanding of exemplary embodiments of the invention as defined by the claims and their equivalents. It includes various specific details to assist in that understanding but these are to be regarded as merely exemplary. Accordingly, those of ordinary skill in the art will recognize that various changes and modifications of the embodiments described herein can be made without departing from the scope and spirit of the invention. In addition, descriptions of well-known functions and constructions are omitted for clarity and conciseness.

[0049] The terms and words used in the following description and claims are not limited to the bibliographical meanings, but, are merely used by the inventor to enable a clear and consistent understanding of the invention. Accordingly, it should be apparent to those skilled in the art that the following description of exemplary embodiments of the present invention are provided for illustration purpose only and not for the purpose of limiting the invention as defined by the appended claims and their equivalents.

[0050] It is to be understood that the singular forms "a," "an," and "the" include plural referents unless the context clearly dictates otherwise. Thus, for example, reference to "a component surface" includes reference to one or more of such surfaces.

[0051] A basic concept of exemplary embodiments of the present invention will be briefly described. In the exemplary embodiments of the present invention, a network providing a broadcast service creates a seed key pair used for creating Traffic Encryption Keys (TEKs) and transmits the seed key pair to a terminal. When using the seed key pair, the network and the terminal each create a certain number n of TEKs, where n corresponds to a lifetime of the seed key pair. The network encrypts data with the n TEKs and transmits the data to the terminal the certain number n of times. The terminal also decrypts the transmitted encrypted data with the n TEKs created by the terminal itself.

[0052] When transmission/reception of data is completed as all the n TEKs are used, a lifetime of the seed key pair expires and the network creates a next encryption key pair and transmits the encryption key pair to the terminal. However, if the terminal is a Pay-Per-View (PPV) terminal that has requested a particular program, the terminal sets a lifetime of the seed key pair according to a broadcast time of the particular program. Therefore, there is no need to update any more seed key pair. The network may be a base station or a server controlling the base station, or a server of a service provider providing broadcast services in a wireless communication system providing broadcast services.

[0053] The broadcast service method and apparatus proposed by exemplary embodiments of the present invention may be applied to broadcast services in a wireless communication system and also in a wired communication system.

[0054] Creation of the TEKs will be described below based on the foregoing basic concept.

[0055] FIG. **4** illustrates a creation of encryption keys in a broadcast service system according to an exemplary embodiment of the present invention.

[0056] Referring to FIG. **4**, an encryption key pair, called a Key Seed Pair (KSP), is created in step **401**. The KSP includes two keys. That is, the KSP includes KS_1 and KS_2. The KSP may be randomly created in a network.

[0057] Thereafter, hash chains are applied to the KS_1 and the KS_2 in steps **403** and **405**, respectively. That is, a forward hash chain is applied to the KS_1 in step **403**, and a reverse hash chain is applied to the KS_2 in step **405**. Steps **403** and **405** may be performed either simultaneously or with a time difference. Even with a time difference, any one of steps **403** and **405** may be performed first.

[0058] More specifically, in step **403**, an S_1 is determined by applying a hash function to the KS_1, and an S_2 is found by applying the hash function to the S_1. Determination for up to an S_n is performed in a similar manner.

[0059] The reverse hash chain in step **405** progresses in an opposite direction compared with the forward hash chain.

That is, an M_n is first found by applying a hash function to the KS_2, and an M_{n-1} is determined by applying the hash function to the M_n. In this manner, up to an M_1 is determined by applying the hash function to the M_2. When steps **403** and **405** are completely performed, n (S_i, M_i) pairs may be created, which are defined as a "Bidirectional Hash Pair (BHP)".

[0060] In step **407**, n TEKs are found by applying a certain operation to the n BHPs determined in steps **403** and **405**. The operation used may be an Exclusive OR (XOR) operation. That is, the TEKs may be found with an equation of $TEK_i=S_i$ XOR M_i.

[0061] In summary, one KSP (KS_1, KS_2) is first created, n BHPs (S_i, M_i) are created with the KSP, and n TEKs are created with the n BHPs (S_i, M_i). A process for creating the TEKs may be performed in a network and/or a terminal.

[0062] If the terminal is a registered terminal, the network transmits a KSP, and the network and the terminal determine n TEKs using the above-described method. Thereafter, the network may encrypt data, and the terminal may decrypt the encrypted data.

[0063] However, if the terminal is a PPV terminal, the network may illustrate a slight difference without using the KSP. That is, the network does not find a KSP, but finds an Access Valid Pair (AVP). Thereafter, the network transmits the AVP to the PPV terminal. The "AVP" refers to an (S_i, M_j) information pair corresponding to a particular time period for which broadcast service is provided to the PPV terminal. The PPV terminal finds a value of up to an S_j by applying a forward hash chain to the S_i, and finds a value of up to an M_i by applying a reverse hash chain to the M_j. That is, the PPV terminal creates m BHPs from the AVP. If the number of BHPs created in the PPV terminal is m, m=j−i+1. In conclusion, the PPV terminal finds m TEKs using the m BHPs.

[0064] In summary, an encryption key pair transmitted from the network to the registered terminal is KSP=(KS_1, KS_2), and an encryption key pair transmitted to the PPV terminal is AVP=(S_i, M_j). Although both the KSP and the AVP are different in name, the KSP and the AVP are essentially equal in that they are information related to data encryption for a time period of a broadcast service provided to the terminal. That is, if information related to data encryption at a start time of a reference period of the broadcast service is KS_1 and information related to data encryption at an end time is KS_2, the S_i may indicate information related to data encryption at a start time in an arbitrary time period belonging to the reference period, and M_j may indicate information related to data encryption at an end time in the arbitrary time period.

[0065] For example, if a user can purchase a coupon for a broadcast service month by month, a terminal of the user who purchased the one-month coupon may be considered as a registered terminal. A KSP, i.e., (KS_1, KS_2), currently transmitted to the registered terminal may indicate information related to data encryption at a start time and an end time of the one month, respectively. If a user purchased a coupon for a single drama, a terminal of the user becomes a PPV terminal, and an AVP, i.e., (S_i, M_j), transmitted to the PPV terminal at this time may indicate information related to data encryption at a start time and an end time of the drama, respectively.

[0066] In the foregoing description, the KSP information was used in pairs for the registered terminal. In some cases, however, one of the KSP information, i.e., one of KS_1 and KS_2, may be used instead of the information pair, for the registered terminal. Since the number of information pieces is not two, there is no need to identify the information with subscripts. Therefore, the information may be simply named "KS." The KS may be information related to data encryption at a start time or an end time of a subscription period of the registered terminal. That is, when it is determined to apply a reverse hash chain to a KS, the KS may indicate information related to data encryption at an end time of a broadcast service. If it is determined to apply a forward hash chain to the KS, the KS may become information related to data encryption at a start time of the broadcast service.

[0067] A reverse hash chain may be applied to the KS in the following manner.

[0068] A network creates a KS and delivers the KS to a registered terminal. In this case, other parameters (e.g., the number of TEKs, a lifetime of the TEK and the like) associated with the KS may also be transmitted together.

[0069] To create n TEKs, a hash function is applied to the KS in a reverse direction n times. That is, TEKs are created as follows:

$$TEK_n=\text{hash}(KS),\ TEK_{n-1}=\text{hash}(TEK_n),\ TEK_2=\text{hash}(TEK_3)\ldots,\ TEK_1=\text{hash}(TEK_2).$$

[0070] Additionally, the KSP or the AVP may be combined with the conventional SEK or PEK. For example, in an OMA BCAST, the KSP or the AVP may be encrypted by the SEK and PEK, and delivered to the terminal. The TEK may be created from the KSP or the AVP in the network and the terminal as described above.

[0071] Encryption key management methods of an exemplary embodiment of the present invention by the network and the terminal will be described with reference to FIGS. **5** and **6**, respectively.

[0072] FIG. **5** illustrates an encryption key management method by a network in a broadcast service system according to an exemplary embodiment of the present invention.

[0073] Referring to FIG. **5**, a network receives a registration message from a terminal in step **501**. The "registration message" refers to a message including terminal registration information that a terminal uses to receive a service or a program from the network. In step **503**, the network determines if the terminal is a registered terminal or a PPV terminal, based on the registration message.

[0074] Determining if the terminal is a registered terminal or a PPV terminal may be performed in various manners. For example, a registration message transmitted from a terminal to the network may include a separate identifier indicating whether the terminal is a registered terminal or a PPV terminal, or the network may be allowed by an authentication server (not illustrated) connected to the network to inquire if the terminal is a registered terminal or a PPV terminal.

[0075] The network proceeds to step **505** if the terminal is a registered terminal, and proceeds to step **507** if the terminal is a PPV terminal. In step **505**, the network updates (i.e., creates and transmits) a KSP to the terminal

[0076] In step **507**, the network updates an AVP. That is, in step **507**, the network creates an AVP and transmits the AVP to the PPV terminal. Thereafter, in step **509**, the network creates TEKs by applying forward and reverse hash chains to the KSP or the AVP. The network will create n TEKs using the KSP if the terminal is a registered terminal, and create m TEKs using the AVP if the terminal is a PPV terminal. In step **511**, the network encrypts data using the TEKs and transmits the encrypted data to the terminal. In step **513**, the network determines if the TEKs are created using the KSP or the AVP, and experiences different processes according to the result. That is, if the current TEK was created using the KSP, the

network determines in step **515** whether a lifetime of the KSP has expired. If the lifetime of the KSP has expired, the network returns to step **505** and updates the next KSP. If the lifetime of the KSP has not expired, the network returns to step **511** where it encrypts data using the next TEK and transmits the encrypted data. However, if the current TEK was created using the AVP, the network determines in step **517** whether a lifetime of the AVP has expired. If the lifetime of the AVP has not expired, the network returns to step **511** where it encrypts data using the next TEK and transmits the encrypted data. However, if the lifetime of the AVP has expired, the network ends all processes since there is no need to update the AVP any longer.

[0077] FIG. **6** illustrates an encryption key management method by a terminal in a broadcast service system according to an exemplary embodiment of the present invention.

[0078] Referring to FIG. **6**, a terminal transmits a registration message to a network in step **601** and receives an updated KSP or AVP from the network in step **603**. That is, the terminal receives the KSP if it is a registered terminal and receives the AVP if it is a PPV terminal. In step **605**, the terminal creates a TEK using the KSP or the AVP. In step **607**, the terminal receives encrypted data from the network. In step **609**, the terminal decrypts the encrypted data using the TEK. The following operation varies according to whether the TEK was created using the KSP or the AVP.

[0079] If the TEK was created using the KSP, in other words, if the terminal is a registered terminal, the terminal proceeds to step **613**. If it is determined in step **613** that a lifetime of the KSP has expired, the terminal returns to step **603** and receives an updated KSP. However, if the lifetime of the KSP has not expired, the terminal returns to step **609** and decrypts the encrypted data with the next TEK created using the current KSP.

[0080] However, if the TEK was created with the AVP in step **611**, in other words, if the terminal is a PPV terminal, the terminal proceeds to step **615**. If a lifetime of the AVP has not expired in step **615**, the terminal returns to step **609** and decrypts the encrypted data with the TEK continuously. However, if the lifetime of the AVP has expired, the terminal terminates without performing any operation since it has decrypted all received encrypted data.

[0081] With reference to FIGS. **7** to **12**, a description will now be made in which exemplary embodiments of the present invention described in connection with FIGS. **4** to **6** are applied to different broadcast systems. FIGS. **7** to **10** illustrate possible examples of a registered terminal and a PPV terminal in an OMA BCAST, and FIGS. **11** and **12** illustrate examples applicable to a registered terminal and a PPV terminal in a Worldwide Inter-operability for Microwave Access (WiMax) broadcast service system.

[0082] FIG. **7** illustrates an exemplary encryption key management applied to a registered terminal in an OMA BCAST according to an exemplary embodiment of the present invention.

[0083] Referring to FIG. **7**, a network **720** updates a KSP (KSP_y) for an arbitrary call in step **701**. That is, the network **720** encrypts a KS_1 and a KS_2 with a Security Key (SK) and transmits the KS_1 and KS_2 to a registered terminal **710**. The network **720** creates n BHPs with the KSP, creates n TEKs from the BHPs, encrypts data using the n TEKs, and transmits the encrypted data to the registered terminal **710**.

[0084] The registered terminal **710** creates TEKs with the KSP in the same manner as the network **720**, and decrypts the encrypted data received from the network **720**. If data transmission/reception is completed as all of n TEKs are used, a lifetime of the KSP_y expires **705**. Therefore, the network **720** updates the next KSP KSP_{y+1} in step **703**.

[0085] FIG. **8** illustrates an exemplary encryption key management applied to a PPV terminal in an OMA BCAST according to an exemplary embodiment of the present invention.

[0086] Referring to FIG. **8**, if a PPV terminal **810** has purchased a broadcast service available for a specific access period, a network **820** updates (i.e., creates and transmits) an AVP to the PPV terminal **810** in step **801**. That is, the network **820** encrypts a (S_i, M_j) pair using an SK and transmits the result to the PPV terminal **810**.

[0087] The following operation of the PPV terminal **810** is similar to the PPV terminal described above. That is, the PPV terminal **810** applies forward and reverse hash chains to the received (S_i, M_j) pair. Then, values of $S=\{S_i, S_{i+1}, S_{i+2}, \ldots S_{j-1}, S_j\}$ and $M=\{M_{j-1}, M_{j-2}, \ldots, M_{i+1}, M_i\}$ are determined. Thereafter, the PPV terminal **810** may find m TEKs of TEK_i~TEK_j by performing an XOR operation on the determined values. In this case, $m=j-i+1$. That is, the value of m may be determined from the (S_i, M_j). Here, a lifetime of (S_i, M_j)=m×(lifetime of TEK), and m is less than or equal to n ($m \leqq n$), because n indicates the number of TEKs, which corresponds to a lifetime of the KSP, and m indicates the number of TEKs, which corresponds to a lifetime of the AVP **805**.

[0088] If an access period **802** has expired and a user has purchased a broadcast service available for an additional access period, the network **820** updates a new AVP and transmits the AVP to the PPV terminal **810** in step **803**. The PPV terminal **810** may receive the broadcast service for a new access period in step **804**.

[0089] FIG. **9** illustrates an operation of each entity in an encryption key management for a registered terminal in an OMA BCAST according to an exemplary embodiment of the present invention.

[0090] The description of FIG. **7** has been given with two entities, such as a registered terminal and a network. However, the network may consist of a plurality of entities in an OMA BCAST. FIG. **9** illustrates a call flow between a terminal and the entities constituting the network.

[0091] The entities of the OMA BCAST system will first be described, which may be applied to FIGS. **9** and **10** in common. A Service Protection-Management unit (SP-M) **930** (or **1030**) has a function of registering and managing terminals. A Service Protection-Key Distribution unit (SP-KD) **940** (or **1040**) creates a KSP or an AVP and delivers the KSP or the AVP to terminals. In addition, a Service Provider-Encryption unit (SP-E) **950** (or **1050**) has a function of creating a TEK(s) using the KSP or AVP provided from the SP-KD **940** (or **1040**), encrypting data with the TEK and directly transmitting the encrypted data to terminals.

[0092] Referring to FIG. **9**, a registered terminal **960** transmits a registration message to the SP-M **930** in step **901**. The registration message includes a service ID (for example, 001) of a broadcast service the registered terminal **960** desires to receive. In step **903**, the SP-M **930** establishes an SK with the registered terminal **960**. That is, the SP-M **930** establishes the same SK as that of the registered terminal **960** by exchanging necessary information in order to share the SK with the registered terminal **960**. In step **905**, the SP-M **930** delivers the SK to the SP-KD **940**. In step **907**, the SP-KD **940** updates a KSP for the registered terminal **960** by creating and deliver-

ing the first KSP (KSP_1) to the registered terminal **960**. In step **909**, the SP-KD **940** delivers the KSP_1 to the SP-E **950**. The SP-E **950** creates n TEKs using the KSP_1, encrypts broadcast data with one (indicated by TEK_x) of the created n TEKs, and transmits the encrypted data to the registered terminal **960** in step **911**. In step **913**, data encrypted with the created n^{th} TEK is transmitted to the registered terminal **960**. Since all of the created n TEKs have been used in step **913**, a lifetime of the KSP_1 has expired. Therefore, the SP-KD **940** updates (i.e., creates and transmits) the second KSP (KSP_2) to the registered terminal **960** in step **915**. The succeeding process is equal to the process after the KSP_1 is updated.

[0093] FIG. **10** illustrates an operation of each entity in an encryption key management for a PPV terminal in an OMA BCAST according to an exemplary embodiment of the present invention.

[0094] A description of FIG. **10** will be given by focusing on the difference from FIG. **9**. In the example of FIG. **10**, the terminal is a PPV terminal **1060**. Therefore, a registration message that the PPV terminal **1060** transmits in step **1001**, includes a program ID (for example, 002), which denotes that the PPV terminal **1060** requires a particular broadcast program. In step **1007**, the SP-KD **1040** updates an AVP_1 and transmits the AVP_1 to the PPV terminal **1060**. In step **1013**, the SP-E **1050** encrypts data using an mth TEK (TEK_{x+m}) and transmits the encrypted data to the PPV terminal **1060**. After expiration of a lifetime of the AVP_1, the next AVP_2 is not updated automatically. Instead, the AVP_2 is updated when a user additionally requests a broadcast service for a specific time period. Other operations (i.e., SK Establishment **1003**, SK Delivery **1005**, AVP_1 Delivery **1009**, and transmitting the encrypted data **1011**) of FIG. **10** are similar to the operations (i.e., SK Establishment **903**, SK Delivery **905**, KSP_1 Delivery **909**, and transmitting the encrypted data **1011**) in FIG. **9**.

[0095] FIG. **11** illustrates an encryption key management for a registered terminal in a WiMax broadcast service system according to an exemplary embodiment of the present invention. In the WiMax broadcast service system, encryption keys are managed not by a plurality of entities as in the OMA BCAST, but by one Multicast and Broadcast Service (MCBCS) server.

[0096] Referring to FIG. **11**, when a registered terminal **1120** progresses with a procedure for subscribing to a broadcast service provided from an MCBCS server **1130** in step **1101**, the MCBCS server **1130** updates the first KSP (KSP_1) and transmits the KSP_1 to the registered terminal **1120** in step **1103**. At the same time, the MCBCS server **1130** and the registered terminal **1120** each create n TEKs. In step **1105**, the MCBCS server **1130** encrypts data using the created n TEKs and transmits the encrypted data to the registered terminal **1120**. When a lifetime of the KSP_1 expires as all of the n TEKs are used, the MCBCS server **1130** updates the second KSP (KSP_2) and transmits the KSP_2 to the registered terminal **1120** in step **1107**. At the same time, the MCBCS server **1130** and the registered terminal **1120** each create n TEKs using the KSP_2. In step **1109**, data encrypted with the created n TEKs is transmitted to the registered terminal **1120**.

[0097] FIG. **12** illustrates an encryption key management for a PPV terminal in a WiMax broadcast system according to an exemplary embodiment of the present invention.

[0098] A description of FIG. **12** will be given by focusing on the difference from FIG. **11**. In step **1201**, a PPV terminal **1220** purchases access time for which it will access an MCBCS server **1230** to receive a broadcast service for a particular time period. In step **1203**, an AVP_1 corresponding to the particular time period is updated. In addition, the MCBCS server **1230** and the PPV terminal **1220** each create a TEK using the AVP_1. In step **1205**, data encrypted by the TEK created with the AVP_1 is transmitted from the MCBCS server **1230** to the PPV terminal **1220**. Here, an AVP_2 is not updated automatically upon expiration of a lifetime of the AVP_1. That is, when the PPV terminal **1220** purchases more access time for a particular broadcast service in step **1207**, the MCBCS server **1230** creates and transmits the AVP_2 to the PPV terminal **1220** in step **1209**. Another operation (i.e., the data encrypted with the created n TEKs is transmitted to the registered terminal **1211**) of FIG. **12** is similar to the operation (i.e., data encrypted with the created n TEKs is transmitted to the registered terminal **1120**) in FIG. **11**.

[0099] FIG. **13** illustrates a network apparatus for managing encryption keys in a broadcast service system according to an exemplary embodiment of the present invention.

[0100] A transceiver **1301** receives a registration message including registration information of a terminal from the terminal, and provides the registration message to a controller **1303**. The controller **1303** determines whether the terminal is a registered terminal or a PPV terminal based on the registration information included in the received registration message, and controls a seed key creator **1306** in an encryption key manager **1305** according to the determination result.

[0101] The encryption key manager **1305**, under the control of the controller **1303**, creates a seed key appropriate for the type of terminal and creates an encryption key, i.e., a TEK, using the created seed key. More specifically, the encryption key manager **1305** includes the seed key creator **1306** and an encryption key creator **1307**. The seed key creator **1306** creates a seed key appropriate for the type of terminal. That is, the seed key creator **1306** creates a KSP if the terminal is a registered terminal and creates an AVP if the terminal is a PPV terminal. The created KSP or AVP is provided to the transceiver **1301** and the encryption key creator **1307**. The KSP or AVP provided to the transceiver **1301** is transmitted to the terminal, undergoing update. The terminal creates TEKs using the updated KSP or AVP.

[0102] Meanwhile, the encryption key creator **1307**, which has received the KSP or the AVP, creates as many TEKs as the number corresponding to a lifetime of the KSP or the AVP. That is, the encryption key creator **1307** will create n TEKs using the KSP when the terminal is a registered terminal, and create m TEKs using the AVP when the terminal is a PPV terminal. In creating TEKs from the KSP or the AVP, forward and reverse hash chains may be used as described in connection with FIG. **4**.

[0103] The TEKs are provided from the encryption key creator **1307** to a data encryptor **1309**, and the data encryptor **1309** encrypts data with the TEKs and transmits the encrypted data to the terminal through the transceiver **1301**.

[0104] FIG. **14** illustrates an encryption key management apparatus of a terminal in a broadcast service system according to an exemplary embodiment of the present invention.

[0105] A controller **1403** creates a registration message including registration information of the terminal, and transmits the registration message to a network through a transceiver **1401**. Further, the controller **1403** receives a seed key, i.e., a KSP or an AVP, from the network through the transceiver **1401** in response to the registration message, and provides the KSP or the AVP to an encryption key creator **1405**. The encryption key creator **1405** updates the provided KSP or

AVP, creates as many TEKs as the number corresponding to a lifetime of the updated KSP or AVP, and provides the TEKs to a data decryptor **1407**.

[0106] Meanwhile, upon receipt of encrypted data from the network, the transceiver **1401** forwards the received encrypted data to the data decryptor **1407**. The data decryptor **1407** decrypts the encrypted data using the TEKs provided from the encryption key creator **1405**. An operation after the data decryption does not apply to exemplary embodiments of the present invention.

[0107] As is apparent from the foregoing description, a network may create and transmit certain encryption keys to a terminal a certain time, instead of creating and transmitting a variety of encryption keys to a terminal every time the network transmits broadcast service data to the terminal. Thereby, complexity of the network is reduced. In this manner, the number of creating and transmitting encryption keys to the terminal is reduced, allowing efficient use of communication resources. Further, the terminal may create TEKs by itself by receiving an encryption key a certain time, and decrypt received encrypted data using the created TEKs, contributing to an increase in structural efficiency of the terminal.

[0108] Exemplary embodiments of the present invention can also be embodied as computer-readable codes on a computer-readable recording medium. The computer-readable recording medium is any data storage device that can store data which can thereafter be read by a computer system. Examples of the computer-readable recording medium include, but are not limited to, read-only memory (ROM), random-access memory (RAM), CD-ROMs, magnetic tapes, floppy disks, optical data storage devices, and carrier waves (such as data transmission through the Internet via wired or wireless transmission paths). The computer-readable recording medium can also be distributed over network-coupled computer systems so that the computer-readable code is stored and executed in a distributed fashion. Also, function programs, codes, and code segments for accomplishing the present invention can be easily construed as within the scope of the invention by programmers skilled in the art to which the present invention pertains.

[0109] While the invention has been shown and described with reference to certain exemplary embodiments thereof, it will be understood by those skilled in the art that various changes in form and details may be made therein without departing from the spirit and scope of the invention as defined by the appended claims and their equivalents.

What is claimed is:

1. A method for receiving a broadcast service by a terminal in a communication system, the method comprising:

receiving a key pair comprising a first key and a second key from a network;

generating at least one of encryption keys using the key pair;

receiving encrypted broadcast service data broadcasted from the network; and

decrypting the encrypted broadcast service data broadcasted using the at least one of encryption keys.

2. The method of claim **1**, further comprising transmitting a registration message including a registration information of the terminal to the network.

3. The method of claim **1**, wherein the receiving the key pair comprises receiving a Key Seed Pair (KSP), when the terminal is registered terminal.

4. The method of claim **1**, wherein the receiving the key pair comprises receiving a Access Valid Pair (AVP), when the terminal is Pay-Per-View (PPV) terminal.

5. The method of claim **1**, wherein the generating the at least one of encryption keys comprises:

generating at least one of forward encryption keys by applying a forward hash chain to the first key;

generating at least one of reverse encryption keys by applying a reverse hash chain to the second key; and

generating the at least one of encryption keys using the at least one of forward encryption keys and the at least one of reverse encryption keys.

6. The method of claim **5**, wherein the generating the at least one of encryption keys comprises performing an Exclusive OR on the at least one of forward encryption keys and the at least one of reverse encryption keys.

7. The method of claim **1**, wherein the decrypting the encrypted broadcast service data broadcasted comprises decrypting the encrypted broadcast service data broadcasted using the at least one of encryption keys for a lifetime of the at least one of encryption keys.

8. The method of claim **1**, further comprising receiving a next key pair, when the terminal is a registered terminal and a lifetime of the key pair has expired.

9. The method of claim **1**, further comprising when the terminal is a Pay-Per-View (PPV) terminal and the lifetime of the key pair has expired, transmitting a request for an additional broadcast service and receiving a next key pair in response thereto if the terminal requires the additional broadcast service.

10. A method for receiving a broadcast service by a terminal in a communication system, the method comprising:

transmitting a registration message including a registration information of the terminal to a network;

receiving a key pair comprising a first key and a second key from the network;

generating at least one of forward encryption keys by applying a forward hash chain to the first key;

generating at least one of reverse encryption keys by applying a reverse hash chain to the second key;

generating at least one of encryption keys using the at least one of forward encryption keys and the at least one of reverse encryption keys;

receiving encrypted broadcast service data broadcasted from the network; and

decrypting the encrypted broadcast service data broadcasted using the at least one of encryption keys.

11. The method of claim **10**, wherein the generating the at least one of encryption keys comprises performing an Exclusive OR on the at least one of forward encryption keys and the at least one of reverse encryption keys.

12. The method of claim **10**, wherein the decrypting the encrypted broadcast service data comprises decrypting the encrypted broadcast service data broadcasted using the at least one of encryption keys for a lifetime of the at least one of encryption keys.

13. The method of claim **10**, further comprising receiving a next key pair, when the terminal is a registered terminal and a lifetime of the key pair has expired.

14. The method of claim **10**, further comprising when the terminal is a Pay-Per-View (PPV) terminal and the lifetime of the key pair has expired, transmitting a request for an addi-

tional broadcast service and receiving a next key pair in response thereto if the terminal requires the additional broadcast service.

15. An apparatus for receiving a broadcast service in a terminal for a communication system, the apparatus comprising:

a transceiver for receiving a key pair comprising a first key and a second key from a network;

an encryption key generator for generating at least one of encryption keys using the key pair; and

a data decryptor for decrypting the encrypted broadcast service data broadcasted using the at least one of encryption keys.

16. The apparatus of claim **15**, further comprising a controller for transmitting a registration message including a registration information of the terminal to the network.

17. The apparatus of claim **15**, wherein the transceiver receives a Key Seed Pair (KSP), when the terminal is registered terminal.

18. The apparatus of claim **15**, wherein the transceiver receives Access Valid Pair (AVP), when the terminal is Pay-Per-View (PPV) terminal.

19. The apparatus of claim **15**, wherein the encryption key generator generates at least one of forward encryption keys by applying a forward hash chain to the first key, generates at least one of reverse encryption keys by applying a reverse hash chain to the second key and generates the at least one of encryption keys using the at least one of forward encryption keys and the at least one of reverse encryption keys.

20. The apparatus of claim **19**, wherein the encryption key generator generates the at least one of encryption keys by performing an Exclusive OR on the at least one of forward encryption keys and the at least one of reverse encryption keys.

21. The apparatus of claim **15**, wherein the data decryptor decrypts the encrypted broadcast service data broadcasted using the at least one of encryption keys for lifetime of the at least one of encryption keys.

22. The apparatus of claim **15**, further comprising a controller for receiving a next key pair through the transceiver, when the terminal is a registered terminal and the lifetime of the key pair has expired.

23. The apparatus of claim **15**, further comprising a controller for, when the terminal is a Pay-Per-View (PPV) terminal and the lifetime of the key pair has expired, transmitting a request for an additional broadcast service through the transceiver and receiving a next key pair through the transceiver in response to the request if the terminal requires the additional broadcast service.

24. An apparatus for receiving a broadcast service in a terminal for a communication system, the apparatus comprising:

a transceiver for transmitting a registration message including a registration information of the terminal to a network and for receiving a key pair comprising a first key and a second key from a network;

an encryption key generator for generating at least one of forward encryption keys by applying a forward hash chain to the first key, for generating at least one of reverse encryption keys by applying a reverse hash chain to the second key, and for generating at least one of encryption keys using the at least one of forward encryption keys and the at least one of reverse encryption keys; and

a data decryptor for decrypting the encrypted broadcast service data broadcasted using the at least one of encryption keys.

25. The apparatus of claim **24**, wherein the encryption key generator generates the at least one of encryption keys by performing an Exclusive OR on the at least one of forward encryption keys and the at least one of reverse encryption keys.

26. The apparatus of claim **24**, wherein the data decryptor decrypts the encrypted broadcast service data broadcasted using the at least one of encryption keys for lifetime of the at least one of encryption keys.

27. The apparatus of claim **24**, further comprising a controller for receiving a next key pair through the transceiver, when the terminal is a registered terminal and the lifetime of the key pair has expired.

28. The apparatus of claim **24**, further comprising a controller for, when the terminal is a Pay-Per-View (PPV) terminal and the lifetime of the key pair has expired, transmitting a request for an additional broadcast service through the transceiver and receiving a next key pair through the transceiver in response to the request if the terminal requires the additional broadcast service.

* * * * *