Nov. 23, 1937. H. NILSON 2,099,903

LIFTING APPARATUS

Filed Oct. 26, 1936 3 Sheets-Sheet 1

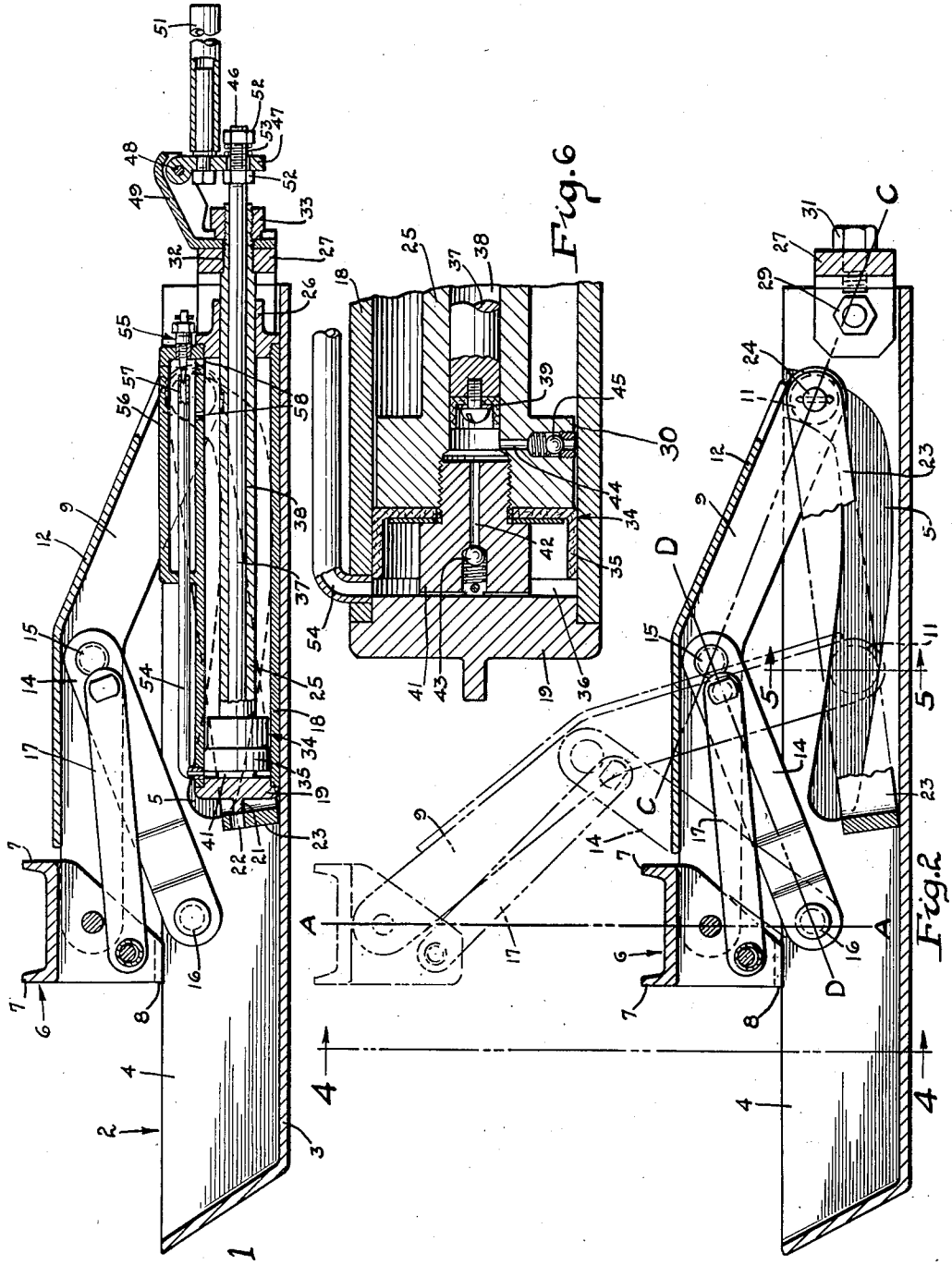

Fig. 1

Fig. 6

Fig. 2

INVENTOR
HAROLD NILSON
BY Paul, Paul & Moore
ATTORNEYS

Nov. 23, 1937. H. NILSON 2,099,903

LIFTING APPARATUS

Filed Oct. 26, 1936 3 Sheets-Sheet 2

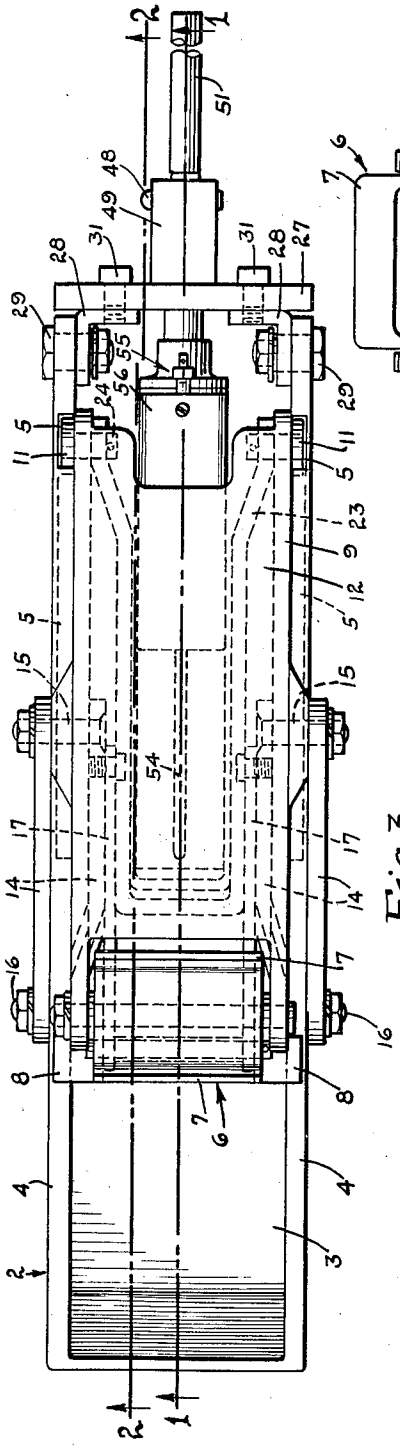

Fig. 3

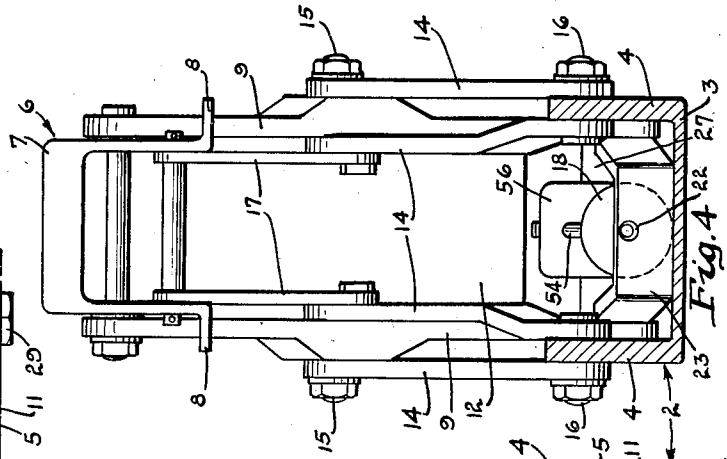

Fig. 4

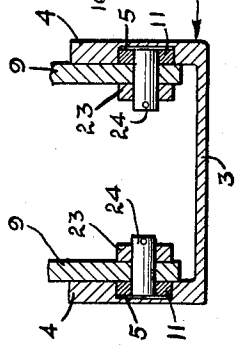

Fig. 5

INVENTOR
HAROLD NILSON
BY Paul, Paul & Moore
ATTORNEYS

Nov. 23, 1937. H. NILSON 2,099,903

LIFTING APPARATUS

Filed Oct. 26, 1936 3 Sheets-Sheet 3

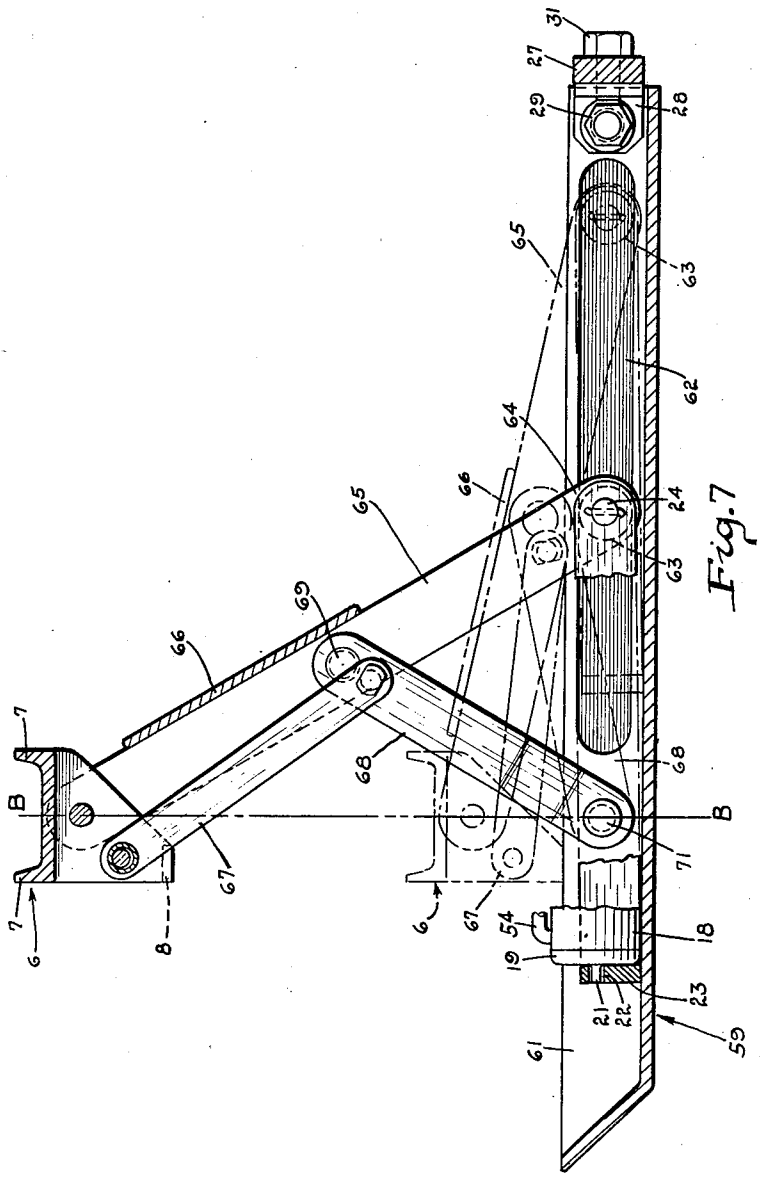

Fig. 7

INVENTOR
HAROLD NILSON
BY Paul, Paul & Moore
ATTORNEYS

Patented Nov. 23, 1937

2,099,903

UNITED STATES PATENT OFFICE

2,099,903

LIFTING APPARATUS

Harold Nilson, Wayzata, Minn., assignor of one-third to John A. Edeby, Wayzata, Minn., and one-third to Emil Berglund, Minneapolis, Minn.

Application October 26, 1936, Serial No. 107,622

3 Claims. (Cl. 254—9)

This invention relates to an improved lifting apparatus, and more particularly to such apparatus of the portable type which may be used for lifting heavy loads, such as trucks, locomotives, machinery, building structures, and the like.

An object of the present invention is to provide a lifting apparatus which, when in a collapsed or retracted position, will be comparatively low in overall height, whereby it may readily be inserted under the axle of a truck when a tire is deflated, or under some other low object to be lifted.

A further object is to provide an apparatus of the character described comprising a lifting member and a novel linkage or lever mechanism for actuating said member in such a manner that the lifting member will travel in a vertical path the full length of its travel.

A further object is to provide a lifting apparatus comprising a suitable base member having a novel linkage mechanism mounted thereon and supporting a lifting member or head adapted to engage the load to be elevated, and suitable guides being provided in said base member for guiding said linkage mechanism, when the apparatus is operated, whereby the lifting head will travel in a vertical path the entire length of its movement.

Other objects of the invention reside in the novel arrangement of the levers and links which constitute the operating mechanism for the lifting head; in the unique shape of the guide slots which control the movement of the main lifting arms in such a manner as to increase to a maximum, the leverage between the power device and the lifting head, upon initial movement of the apparatus, and the operating mechanism further being so constructed that upon continued operation thereof, the leverage gradually increases as the load is elevated, thereby rendering the apparatus applicable for use to elevate extremely heavy loads; and in the simple and inexpensive construction of the apparatus which is such that it may readily be operated by any suitable power means, whether hydraulic, mechanical, or electrical.

Other objects of the invention will appear from the following description and accompanying drawings and will be pointed out in the annexed claims.

In the accompanying drawings there has been disclosed a structure designed to carry out the various objects of the invention, but it is to be understood that the invention is not confined to the exact features shown as various changes may be made within the scope of the claims which follow.

In the drawings:

Figure 1 is a vertical sectional view on the line 1—1 of Figure 3, showing the apparatus in collapsed or retracted position;

Figure 2 is a vertical sectional view on the line 2—2 of Figure 3, showing in full and dotted lines, two positions of the lifting head and also showing the guide slots provided in the base member for guiding the movement of the lever mechanism;

Figure 3 is a plan view of Figure 1;

Figure 4 is a cross-sectional view on the line 4—4 of Figure 2;

Figure 5 is a detail sectional view on the line 5—5 of Figure 2, with some of the parts omitted;

Figure 6 is an enlarged detail sectional view of one end of the hydraulic power device shown in Figure 1; and

Figure 7 is a longitudinal sectional view of an apparatus of slightly modified construction.

The novel apparatus herein disclosed is shown comprising a base member, generally indicated by the numeral 2, which preferably is of channel-shape cross-section, and comprises a bottom wall 3 and side walls 4. Suitable guide slots 5 are provided in the side walls 4 of the base member and are preferably shaped as best shown in Figure 2, for reasons which will subsequently be described.

A lifting head 6, shown having upstanding flanges 7, between which the load is supported, is mounted over the base member 2 and may normally be supported directly thereon by outwardly turned lugs or feet 8, adapted to engage the upper edges of the side walls 4 of the base member, as clearly illustrated in Figure 3.

An important feature of the invention resides in the mechanism provided for elevating the head 6, whereby it will travel in a vertical path, as indicated by the line A—A in Figure 2. This mechanism comprises a pair of main operating arms 9, each shown having one end pivotally connected to the lifting head 6. The opposite ends of the arms 9 are shown provided with suitable anti-friction rollers 11, adapted to roll in the guides 5. To stiffen and strengthen the apparatus, the arms 9 are preferably suitably tied together by a web or boiler plate wall 12, suitably welded or otherwise secured to the upper edges of the arms 9. The arms 9 are bent as best shown in Figures 1 and 2, whereby the upper portions thereof, when the jack is collapsed or retracted, is substantially parallel to the ground

line. The right hand ends of the arms 9, when viewed as shown in Figure 1, are inclined downwardly so that the rollers 11, when the lifting head is in its lowered normal position, will be positioned in the upwardly curved end portions 13 of the guides 5, as best illustrated in Figure 2.

To guide the upper ends of the arms upwardly, when the lower ends thereof are moved in a direction towards the left, when viewed as shown in Figure 2, suitable links 14 are shown having their upper ends pivotally connected to the intermediate portions of the arms 9 by suitable pivots 15. The opposite ends of the links 14 are pivotally connected to the side walls 4 of the base 3 by suitable pivots 16. Relatively smaller links 17 are shown each having one end connected to one of the links 14 adjacent the pivots 15, and their opposite ends similarly connected to the lower portions of the lifting head 6. The links 17 act to retain the lifting head 6 in a horizontal position regardless of its elevation, as clearly illustrated by the full and dotted lines in Figure 2.

Means is provided for operating the main arms 9 to elevate the head 6 and, in the present instance, is shown comprising a hydraulic device comprising a suitable cylinder 18 having at one end a head 19. This head is shown having a projection or pin 21 adapted to be loosely received in a socket 22 provided in a yoke 23. The legs of the yoke are connected to the lower ends of the arms 9 by means of suitable pivots 24 which support the rollers 11 on the lower ends of the arm. Note particularly Figure 5.

A tubular member 25 is shown mounted within the cylinder 18, and has one end slidably supported in a head 26 secured to the opposite end of the cylinder 18, as best shown in Figure 1. The projecting end of the tubular member 25 is secured to a suitable cross member 27, shown fixed to the side walls 4 of the base member 2 by suitable angle brackets 28 and bolts 29 and 31. The tubular member 25, as shown in Figure 1, has a reduced terminal 32 received in an aperture in the cross member 27. This reduced terminal is threaded to receive a suitable nut 33 for fixedly securing said threaded terminal to the cross member 27.

A valve head, generally indicated by the numeral 34 is provided at the opposite, or inner end of the tubular member 25, and has a cup packing 35 secured to the end thereof, which cooperates with the cap 19 and adjacent walls of the cylinder, to provide a fluid chamber 36. A plunger 37 is mounted for reciprocal movement in the bore 38 of the member 25, and is preferably provided at its inner end with a suitable packing 39, as best shown in Figure 6. A plug 41 is shown received in threaded engagement with the head 34 of the member 25, and has a fluid passage 42 communicating with the bore 38 of the member 25. A suitable check valve 43 is provided in the passage 42 to prevent the fluid from returning from the chamber 36 to the bore 38 of the member 25. A lateral intake port 44 is provided in the head 34, and has its inner end communicating with the bore of the member 25 between the packing 39 and the adjacent end of the plug 41. The port 44 is shown having a check valve 45 for limiting circulation of the fluid through the port 44, to one direction, as will readily be understood by reference to Figure 6. The port 44 communicates at its outer end with the interior of the cylinder 18, as will readily be understood by reference to Figure 6, it being noted that the diameter of the head 34 is relatively smaller than the bore of the cylinder 18, thereby to provide a small annular gap 38 between these parts.

The outwardly projecting end of the plunger 37 is shown provided with a threaded portion 46, received in an aperture provided in an operating member 47, pivoted at 48 to a suitable bracket 49 secured to the cross member 27 by such means as the nut 33. The member 47 is shown having a stud 48 secured thereto, for detachably receiving one end of an operating handle 51, whereby the member 47 may readily be oscillated to impart a reciprocal motion to the plunger 37, as will readily be understood by reference to Figure 1. The operating member 47 is retained in position with respect to the plunger 37 by suitable nuts 52, spaced apart to receive therebetween the member 47, as illustrated in Figure 1. A suitable compression spring is preferably interposed between one of the nuts 52 and the member 47 to prevent play between these parts when the member 47 is oscillated by manipulation of the handle 51.

A fluid return pipe 54 connects the chamber 36 with the opposite end of the cylinder 18, through a suitable release valve, generally indicated by the numeral 55. A small housing 56 encloses the end portion 57 of the tube 54, and communicates with the interior of the cylinder 18 through suitable ducts or apertures 58, provided in the wall of the cylinder, as clearly illustrated in Figure 1.

Figure 7 illustrates an apparatus of slightly modified construction comprising a base member, generally indicated by the numeral 59, having side walls 61 provided with suitable guides 62. Rollers 63 are mounted on the end portions 64 of a pair of main lifting arms 65, and travel on the guides 62, thereby to guide the ends 64 of said arms in substantially a horizontal path, when the apparatus is operated to elevate the lifting head 6. The arms 65 are connected together in fixed relation by a suitable plate 66 in a manner similar to the arms 9, shown in the previous figures.

The opposite ends of the arms 65 are pivotally connected to the head 6, and links 67 connect the head 6 to a pair of links 68 adjacent the pivots 69 which connect the upper ends of the links 68 to the intermediate portions of the arms 65. The lower ends of the links 68 are pivotally connected to the side walls of the base member 59 by suitable pivots 71, whereby when the lower ends of the arms 65 are moved in a direction towards the left, when viewed as shown in Figure 7, the links 68 will cause the opposite ends of the arms 65 to swing upwardly simultaneously as the lower ends thereof travel forwardly in the guides 62. By thus guiding the lower ends of the arms 65, the lifting head 6 will travel in substantially a vertical path, as indicated by the broken line B—B in Figure 7.

The arms 65 of the structure illustrated in Figure 7, may be operated by a yoke 23 similar to the one illustrated in the previous figures, and by a power device such as shown in Figure 1.

The form shown in Figure 7 distinguishes from that shown in Figure 2 in that the guide slots 62 are substantially straight, while the guide slots 5 in the structure illustrated in Figure 2 are irregularly shaped, as shown. It is also to be noted that the arms 65 of the structure illustrated in Figure 7, are substantially straight, whereas the corresponding arms 9 of the structure illustrated

in Figures 1 and 2, are bent at their intermediate portions, as hereinbefore described.

Operation

In the operation of this novel lifting apparatus, the power device, in the present instance, constituting the cylinder 18 and plunger 37, is operated by manipulation of the handle 51, whereby the reciprocal movement of the plunger 37 will, upon each return stroke, draw a portion of the oil in the cylinder into the bore 38 of the tubular member 25, through the check valve 45 and port 44. Upon the forward movement of the plunger 37, the oil drawn into the bore 38 will be forced through the passage 42, check valve 43, and into the chamber 36, whereby a force is exerted against the head 19 with the result that the cylinder is thrust forwardly, it being understood that the head 34 of the tubular member 25 is held against movement by its connection with the cross member 27. It is also to be understood that when the power device is operated to elevate the lifting head 6, the release valve 55 is closed, so that the fluid pumped into the chamber 36 cannot escape therefrom.

When the head has been elevated to the desired level, it may be held in such position indefinitely, as a result of the oil in the chamber 36 being confined therein with no possible means of escape. The return of the fluid from the chamber 36 through the passage 42 to the bore 38 of the chamber 25, is prevented by the check valve 43.

When it is desired to lower the lifting head 6, the release valve 55 is opened, whereby the fluid in the chamber 36 is by-passed to the opposite end of the cylinder 18, thereby allowing the cylinder to return to its normal retracted position, shown in Figure 1.

By shaping the guide slots 5, as illustrated in Figure 2, the lifting head 6 will travel in a vertical path the entire length of its travel. When straight guide slots are used, as shown at 62 in Figure 7, and when the arms 65 are substantially straight, as herein shown, the lifting head will travel in substantially a vertical path from the dotted line position to the full line position, shown in Figure 7, after which, upon continued forward movement of the cylinder, the lifting head may deviate slightly from the vertical path. The extent of its vertical travel, however, is sufficient in most cases to meet the requirements demanded of such an apparatus.

In the drawings, I have shown the operating arms for the lifting head, as being actuated by a hydraulically operated device, but it is to be understood that any other device suitable for the purpose may be used for thus operating the arms 9 to vertically translate the lifting head 6.

By pivotally connecting the arms 9 to the upper ends of the links 14, as illustrated in the drawings, the pivots 15 form traveling fulcrums for the arms 9, because of their upward swinging movement, when the arms are actuated to lift the load. This arrangement provides a very simple and efficient mechanism which may readily be operated by any suitable power device to lift the load.

The novel lifting apparatus herein disclosed, has been found particularly useful for lifting heavy trucks and other extremely heavy loads. Because of the lifting head traveling in a vertical path the full length of its travel, the apparatus may also be used for lifting relatively stationary objects such as heavy machines or building structures. The apparatus, when in its normal retracted position, is comparatively low in overall height so that the lifting head may readily be inserted beneath the axle of a truck when a tire is deflated. By translating the lifting head 6 in the manner herein disclosed, maximum travel may be imparted to the head without complicating the operating mechanism therefor. It is also to be noted that by shaping the guide slots 5, as shown in Figure 1, the leverage between the power device and the lifting head 6 is increased because of the initial downward movement of the lower ends of the arms 9, which quickly reduces the angle between the lines C—C and D—D, of the arms 9 and links 14, respectively, whereby the leverage constantly increases as the lifting head travels upwardly, which obviously is highly desirable in apparatus of this particular nature.

It is also to be noted that the apparatus comprises relatively few parts, all of which are readily accessible and are so oriented as to provide an apparatus which is positive in operation, and is practically indestructible, even when roughly handled.

I claim as my invention:

1. In an apparatus of the class described, a base member having a cam-shaped guide formed therein, said guide having a substantially vertically disposed portion, an arcuate portion, and a substantially horizontal and upwardly inclined portion, a lifting head, an arm having its upper end pivotally connected to said head and its lower end operatively engaged with said cam-shaped guide, a link pivotally connected to said base and to said arm, and means for imparting a force to the lower end of said arm to elevate said head, said cam-shaped guide and said link serving to guide said head during movement thereof along a substantially straight vertical axial line.

2. In an apparatus of the class described, a base member having a cam-shaped guide formed therein, said guide having a substantially vertically disposed portion, an arcuate portion, and a substantially horizontal and upwardly inclined portion, a lifting head, an arm having its upper end pivotally connected to said head and its lower end operatively engaged with said cam-shaped guide, a link pivotally connected to said base and to said arm, a second link pivotally connected to the first mentioned link and to said head, and means for imparting a force to the lower end of said arm to elevate said head, said cam-shaped guide and said link serving to guide said head during movement thereof along a substantially straight vertical axial line.

3. In an apparatus of the class described, a base member having a cam-shaped guide formed therein, a lifting head, an arm having its upper end pivotally connected to said head and its lower end operatively engaged with said cam-shaped guide, a link pivotally connected to said base and to said arm, and means for imparting a force to the lower end of said arm to elevate said head, said cam-shaped guide having an end portion thereof disposed at a substantial angle to the remaining portion of said guide thereby to expedite the initial vertical movement of said head, said cam-shaped guide and said link serving to guide said head during movement thereof along a substantially straight vertical axial line.

HAROLD NILSON.