June 30, 1959 R. J. HARDY 2,892,949

ELECTRONIC SPOTTING DEVICE, APPLICABLE IN PARTICULAR, FOR THE GUIDING OF ROCKETS AND OTHER HIGH SPEED APPLIANCES

Filed Dec. 8, 1953 5 Sheets-Sheet 1

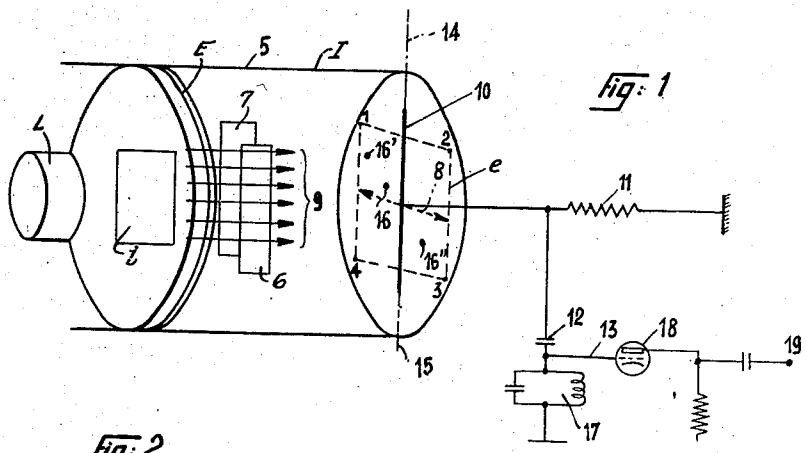

Fig: 1

Fig: 2

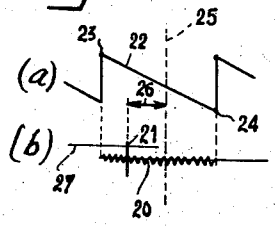

Fig: 3

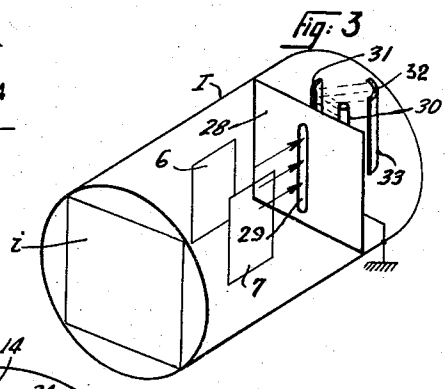

Fig: 4

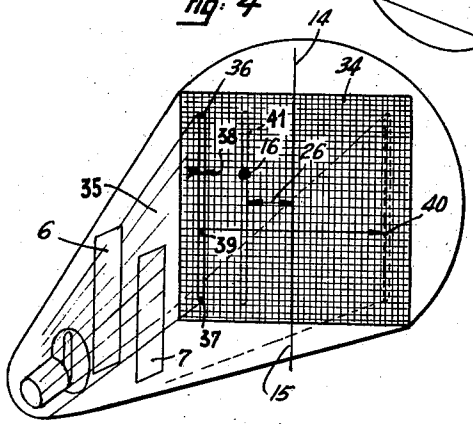

Inventor
René J. Hardy
by
Stevens, Davis, Miller & Mosher
his attorneys

June 30, 1959 R. J. HARDY 2,892,949

ELECTRONIC SPOTTING DEVICE, APPLICABLE IN PARTICULAR, FOR THE GUIDING OF ROCKETS AND OTHER HIGH SPEED APPLIANCES

Filed Dec. 8, 1953 5 Sheets-Sheet 2

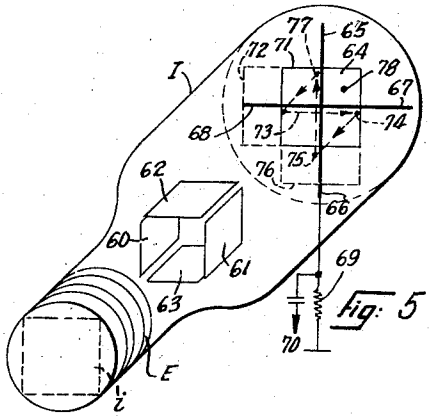

Fig: 5

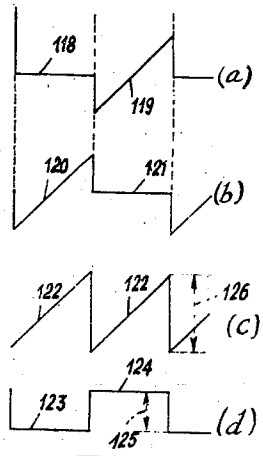

Fig: 6

Fig: 7

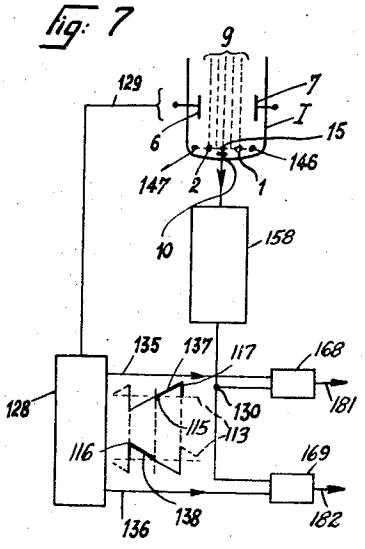

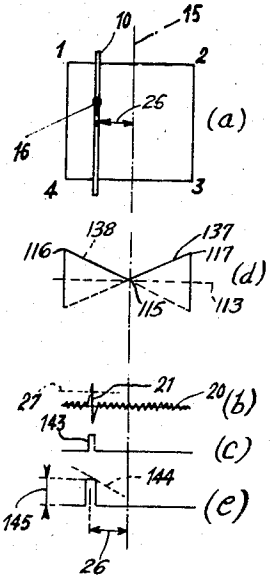

Fig: 8

Inventor
René J. Hardy
by
Stevens, Davis, Miller & Mosher
his attorneys

June 30, 1959 R. J. HARDY 2,892,949

ELECTRONIC SPOTTING DEVICE, APPLICABLE IN PARTICULAR, FOR THE GUIDING OF ROCKETS AND OTHER HIGH SPEED APPLIANCES

Filed Dec. 8, 1953 5 Sheets-Sheet 3

Fig. 9

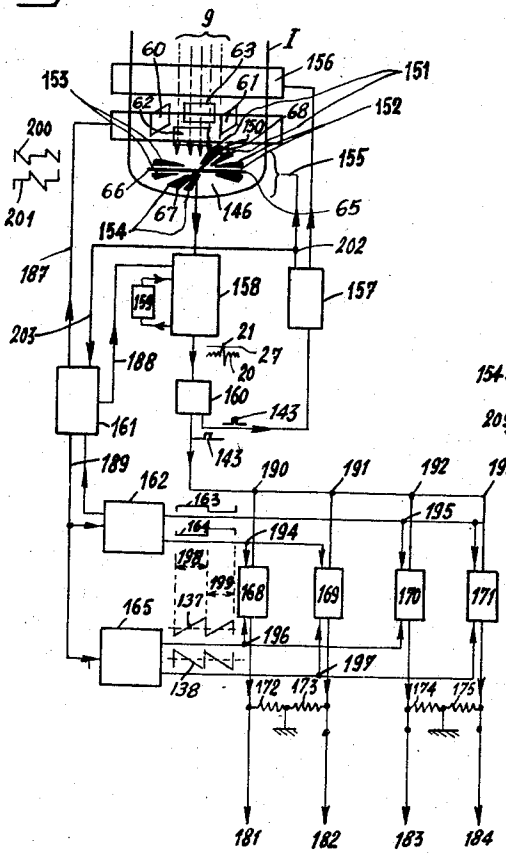

Fig. 10

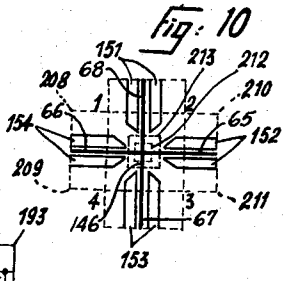

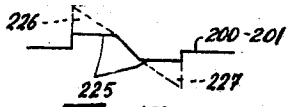

Fig. 15

Inventor
René J. Hardy
by
Stevens, Davis, Miller & Mosher
his attorneys

June 30, 1959 R. J. HARDY 2,892,949

ELECTRONIC SPOTTING DEVICE, APPLICABLE IN PARTICULAR, FOR THE GUIDING OF ROCKETS AND OTHER HIGH SPEED APPLIANCES

Filed Dec. 8, 1953 5 Sheets-Sheet 4

Fig. 11

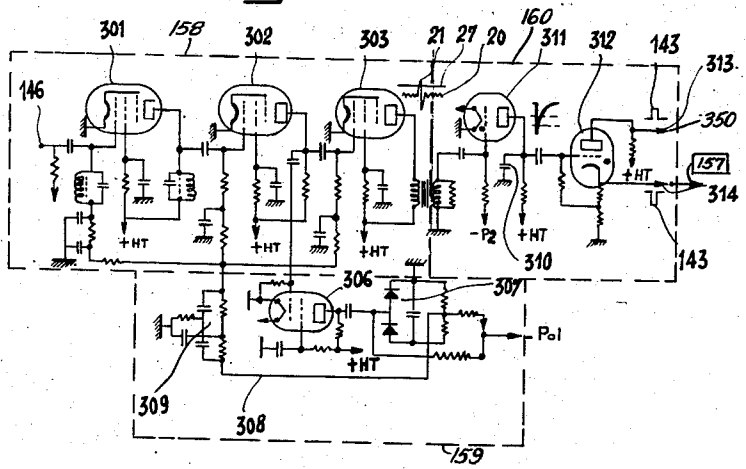

Fig. 12

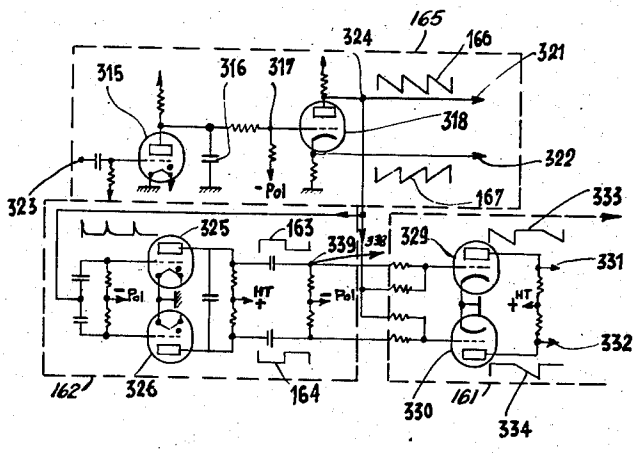

Inventor
René J. Hardy
by Stevens, Davis, Miller & Mosher
his attorneys

June 30, 1959 R. J. HARDY 2,892,949

ELECTRONIC SPOTTING DEVICE, APPLICABLE IN PARTICULAR, FOR THE GUIDING OF ROCKETS AND OTHER HIGH SPEED APPLIANCES

Filed Dec. 8, 1953 5 Sheets-Sheet 5

Fig. 13

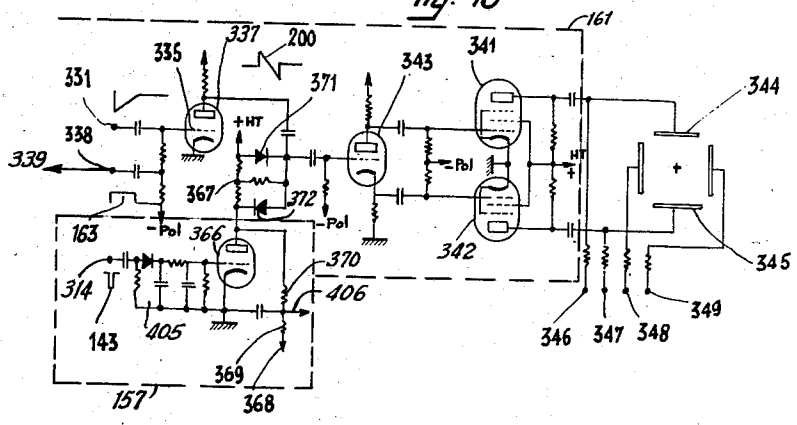

Fig. 14

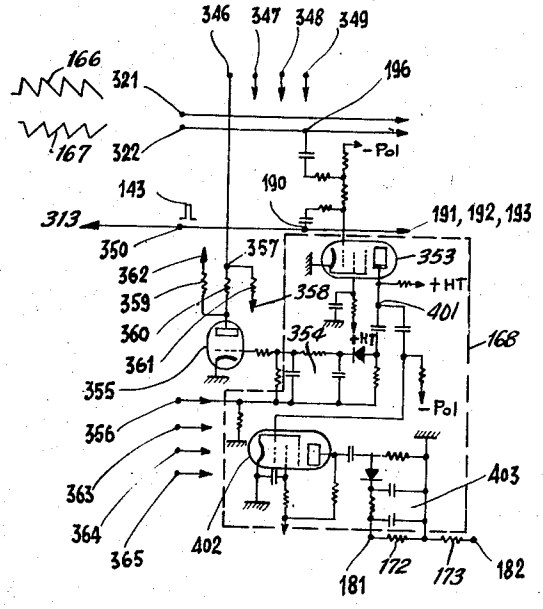

Inventor
René J. Hardy
by Steinme, Davis, Miller & Mesher
his attorneys

United States Patent Office 2,892,949
Patented June 30, 1959

2,892,949

ELECTRONIC SPOTTING DEVICE, APPLICABLE IN PARTICULAR, FOR THE GUIDING OF ROCKETS AND OTHER HIGH SPEED APPLIANCES

René J. Hardy, Paris, France

Application December 8, 1953, Serial No. 396,995

Claims priority, application France December 17, 1952

6 Claims. (Cl. 250—214)

The invention relates to an electronic spotting device which, upon receipt of radiations emitted or reflected by a fixed or mobile target, supplies, in the form of signals, indications which are a function of the coordinates of such target. These signals may also arise from the contrast resulting from the shadow of the target on a relatively uniform luminous base.

This device can have numerous applications, such as the automatic aiming of single pieces or batteries, of artillery, and the remote control of aerodynes moving at high speed (aircraft, rockets or missiles). However, the most interesting application of the invention lies in the automatic guiding of such missiles, and in particular of rockets, toward a target.

One of the main objects of this invention is to provide a new and improved electronically-operating, target direction finding apparatus mounted in a rocket or like missile, for automatically adjusting the path of said missile to ensure impact with the target.

A further object of this invention is to provide such an apparatus with new electronic image scanning means which will accurately and instantaneously determine the various data (position coordinates, velocity) of a movable target.

A still further object of this invention is to provide such scanning means which will limit response of the apparatus to only one target (the first detected target) in the case of a plurality of targets within the field of the apparatus.

More precisely, if for example several aircraft are in the field of the spotting device, the latter effects a selection and concentrates itself on one of the aircraft, thus considerably reducing the risk of interference. This is obtained through an almost instantaneous automatic narrowing of the field that is scanned, so that the field is limited to a small zone necessary to direct the missile to the chosen target.

The invention will now be described in detail with reference to the accompanying drawing, in which:

Figure 1 shows diagrammatically an image converter as applied to the invention,

Figure 2 is a graph of the scanning signal and the collected signals in the device of Figure 1,

Figure 3 shows a collector electrode modified to form an electron amplifier,

Figure 4 illustrates a method of image analysis according to the invention,

Figure 5 shows a modification,

Figure 6 shows wave forms of the scanning voltages,

Figure 7 is a diagram of one embodiment of a spotting apparatus carried out according to the invention,

Figure 8 illustrates the operation of this apparatus,

Figure 9 shows diagrammatically the assembly of an entirely electronic searcher head constructed according to the invention,

Figure 10 shows, in the case of image converters, a modification of the collector electrode, and

Figures 11 to 14 are detailed mounting diagrams of the various parts of the assembly shown in Figure 9.

Figure 15 is a diagram of a truncated saw-tooth voltage.

Figure 1 shows an image converter I of a conventional type, such as the tube known as "Farnworth's image dissector"; the structure and operation of this image dissector which is well known in the art of television, will not be described in detail. It is sufficient to indicate that L is an optical lens system designed to project the optical image *i* of the field on to a screen S formed by a light-sensitive, semi-transparent photo-cathode which converts the optical image into a corresponding stream of electrons **9** emitted by this photo-cathode. This electronic stream is accelerated and concentrated by means of a so-called "electronic lens" device E and then projected, through deflecting means, on to the bottom end **5** of the tube to form a so-called "electronic image" *e* corresponding to the incident optical image.

This, as shown in Figure 1, on a plane **1—2—3—4**, the electronic image of a certain part of space has been projected, which will hereinafter be called simply the "image."

Figure 1 also shows conventional electrostatically-operating deflection electrodes **6, 7**, which enable the electronic beam **9** to be deflected so as to move the image **1—2—3—4** as a whole, in translation, about an electrode having the form of a vertical strip **10**, the axis **14—15** of which occupies a medial position in relation to the image **1—2—3—4** when the same is at rest.

In order to make the image describe repeated movements laterally in relation to the electrode **10**, of an amplitude equal to the width of such image, it is sufficient to apply a saw-tooth signal of the deflecting system **6, 7** by means of any saw-tooth pulse generator (an example of which will be described hereafter). If there is a sufficiently contrasted target in the field of vision of the lens system L, there will be obtained in the plane **1—2—3—4** a spot **16** which is nothing but the electronic image of this target. Thus, at each passage of the spot on the electrode **10** during the entire movement of the image of the field, a pulse emitted by this electrode is produced and collected at the output circuit **19**. This signal is converted by a resistor **11** into voltage, since it produces a potential variation therethrough in accordance with Ohm's law, and this voltage is transmitted through a condenser **12** to a tuned circuit **17** and to the grid **13** of an amplifier valve **18**.

The width of the electrode **10** must be determined with respect to the presumed size of the spot **16** considering the mean size of the target (an aircraft, for example) and a predetermined distance, ranging about say from 4000 to 5000 metres. The width of the electrode must be such that the signal produced is at a maximum in the contemplated situation. For this purpose, this electrode should have a width equal to the diameter of the mean spot produced in such circumstances.

In addition, it is possible to obtain a sufficiently distinct separation of the signal and the background noise by adopting such a tuned frequency for the tuned circuit **17** that the duration of the passage of the spot **16** on the electrode **10** should be equal to or slightly longer than half the natural period of the circuit itself.

The saw-tooth voltage **22** (Fig. 2*a*) applied to the deflecting members **6, 7** ensures, during its period of linear variation **23—24**, the movement of the image in front of the electrode **10** at a constant speed, which movement can be repeated, for example, at the rate of two hundred cycles per second. To each scanning period **23—24** there corresponds an output signal consisting of a background noise **20** and a pulse **21** (Figure 2*b*), distinctly detached

by its amplitude from such background. The part of this pulse **21** above a predetermined level **27** is used to determine (as explained hereafter) the distance **26** to the medial axis **25**, which corresponds with the axis **14—15** of the electrode **10**.

In the preferred application to "searcher heads" or spotting apparatus for self-guided missiles or rockets, I provide a system effecting a twofold scanning or analysis, in two perpendicular directions. The means which will be described hereinafter and which allows carrying out this method of analysis, supplies signals corresponding to the two rectangular coordinates of the spot, and therefore the fixing of the latter in relation to a given origin.

I further provide means which make it possible, when a spot such as **16** is projected onto the plane **1—2—3—4**, to limit the exploration or scanning of this plane to a very small zone surrounding such spot, thus eliminating all risk of interfering signals arising from nearby targets located within the field of vision of the system L and projected at **16'** or **16''**.

It is obvious that instead of using an electrode member such as **10**, it is possible to resort to electrodes obtained by metal plating, or obtained by masking the surface of a plate except for the part which must be sensitive.

In the embodiment according to Figure 3, an opening **29** has been disposed in a screen **28**, arranged in such a manner that only the electrons traversing the slot **29** are able to reach a collector electrode **30** disposed behind the slot. This collector electrode may be associated with secondary electrodes **31, 32**, arranged to form with each other an electron multiplier of known design. Thus, by means of these electrodes in series, a direct amplification is obtained, the output signal being led from the last electrode **33**, through the line **19**.

Instead of an image converter, it is possible to use any other suitable television camera, for example, an iconoscope, the mosaic of which, made up of a plurality of photosensitive elementary cells, is shown diagrammatically in Figure 4. The screen **34** formed by this mosaic receives the optical image of the visual field projected by the optical lens system and this image translates itself into a charge of the different elementary cells which is proportional to the luminosity of the corresponding points.

In contra-distinction with television in which a very fine electronic pencil beam scans successively all the points of the image along successive lines, in the present case the electronic pencil is replaced by a far longer beam **35** extending, for example, from the top **36** to the bottom **37** of the image, but having a very slight thickness **38**. Thus, when this planar beam is laterally deflected from **39** to **40**, it scans the whole of the image.

In passing through the position **41**, the beam meets the spot **16**. A signal (similar to the signal **21** of Figure 2) is then produced, and makes it possible to determine the distance **26** separating the spot **16** from the medial axis **14—15**, by means of appropriate circuits, which will be described hereinafter.

An analysis of the plane **34** in two perpendicular directions is necessary in order to obtain the two rectangular coordinates of the spot **16**, thereby enabling the spotting of the target aimed at.

For this purpose, different methods of analysis are possible. However the electron image is preferably moved in front of fixed collector electrodes in the manner which will be considered now.

Figure 5 shows a cruciform electrode **65—66—67—68**, in the plane perpendicular to the axis of an image converter tube similar to the one illustrated in Figure 1 and of such a kind that the electronic image which corresponds to the initial optical image on a semi-transparent photo-cathode, forms on the plane of the electrodes.

By means of the set of electrostatic or magnetic deflecting members, a complex signal of alternate saw-tooth portions is applied in order to obtain the movement of the image, first laterally, then vertically. The generation of such a signal will be described hereafter theoretically with reference to Figure 6 and practically with reference to Figs. 12 and 13 (see specially tubes **318, 329, 330** and **337**).

At the beginning of the cycle, the left hand edge of the image is located at **72** and the centre of this image, at **73**. The image moves at an uniform velocity until, for example, its centre reaches **74**, then within a relatively very short time, the centre of the image passes from **74** to **75**, its bottom edge being at **76**, the image rises more slowly and its centre arrives at **77**, and rapidly returns to the origin **73** of the cycle.

In the course of this analysis, the spot **16** first meets the electrode **65—66**, then, in the vertical analysis, the electrode **67—68**. The two pulses collected at **70**, correspond to the two coordinates of the image.

During the rapid returns, only negligible pulses are produced by the passage in front of the electrodes.

An embodiment of the invention will now be explained by taking as the analysing device one which employs the principle set forth hereinabove, that is to say, a tube derived from conventional image converters with semi-transparent photo-cathodes, in which the electronic beam is subjected to deflecting action by means of two pairs of standard deflecting members **60—61** and **62—63**, perpendicular to each other in such a manner that the electronic image is displaced alternately, horizontally and vertically about a cruciform fixed electrode **65—66—67—68**.

In accordance with the invention, a signal such as **118—119** (Figure 69) is applied to one pair of deflecting members and a signal such as **120—121** (Figure 66) to the other pair.

The signal **118—119** (or **120—121**) is obtained by the superimposition of a saw-tooth signal such as **122** (Figure 6*c*) and of two castellated signals such as **123, 124** (Figure 8*d*) whose amplitude **125** is half the amplitude **126** of the saw-tooth signal. The castellated signal **123—124** is applied in phase with the saw-tooth signal **122** to a former tube (**329, 330**, Fig. 12) for the cancellation of one serration every other time and the second is applied with the resultant signal obtained from the former tube to a second tube (**337**, Fig. 13) for adjusting the voltage level of the cancelled serrations of the middle of the voltages of the ends of the remaining serrations. The corresponding circuit will be described thereafter with reference to Figures 12 and 13.

In the absence of any deflection of the electron beam, the image is at rest in the middle, with its centre at the intersection of the electrodes **65, 66, 67, 68** (Figure 5).

Figures 7, 8 illustrate how to obtain one of the coordinates of a target, in the form of a corresponding pulse.

The image converter I similar to one shown in Figure 1 is here used with an amplifier network and pulse generator **158** for the signal **21**. This network which is detailed in Figure 11, comprises an automatic gain regulator and a threshold limiter which only leads the fraction of the signal emerging above a threshold value **27**; the network then transforms the emerging pulse into a pulse **143** of constant shape and magnitude (Fig. 8*c*).

The unvarying pulse **143** which has a short duration relatively to that of the complete scanning cycle, does not appear unless there is a detected signal due to a target spot on the electron image. This issuing pulse is applied simultaneously at **130** to two mixer stages **168, 169** (detailed hereafter with reference to Figure 14) which, in the absence of a pulse do not supply any output voltage at the terminals **181, 182**.

These stages **168, 169** comprise valves with control grids which are substantially negatively biased and to these grids are applied complementary saw-tooth signals **137, 138** issuing from the saw-tooth generator **165** (Figure 12), which also energizes through the line **129**, the deflecting plates **6—7** of the tube I.

As stated above, the control grids of the mixer stages **168**, **169** are at a very negative potential and when a pulse appears at **130**, this pulse is superimposed on a valve (see **353** in Fig. 14) owing to the grid or grids thereof on one of the complementary saw-tooth waves **137**, **138**. The negative bias of the grids is adjusted in such a manner that only during half the cycle of the saw-tooth waves (the part of **137** and **138** above the cut off level **113**) the invariable pulse can emerge. The magnitude **145** of the output signal **144** of the negatively biased values of **168**, **169** will depend on the moment at which the input pulse **143** occurs. If it occurs say just at the cut off **113** it will give no output signal, and the farther it is from this point **115** or in other words, the nearer it is to **116** or **117**, the greater will the signal **144** be.

Figure 8 illustrates the successive modifications of the signal in the case of a spot **16** at the left of the medial axis **15** of the image *e* when at rest (i.e. no deflection of the electron beam). The mixer-stage **169** will be operative, since the pulse occurs when it is above cut-off, the mixer-stage **168** being then below cut-off.

Figure 8*a* shows the position of the spot in this case at the distance **26** from the axis **15** and Figure 8*b* the resulting signal **21** which emerges from the network and pulse generator **158** as an unvarying square pulse **143** (Figure 8*c*). In Figure 8*d* are shown the saw-tooth wave forms **138** and **137** issuing from the saw-tooth generator **165** (the portion above cut-off **113** is shown in full lines whereas the portion below cut-off is shown in dotted line). Lastly, Figure 8*e* shows the eventual output pulses **144** issuing from the mixer-stage **169**.

It will thus be seen that, according to the distance **26** of the signal **21** in relation to the axis **15** of the image *e*, the spot **16** will eventually give a pulse of an amplitude **145** proportional to **26** at the terminal **182** or **181** according to whether the spot is on one side or the other of the axis **15**.

The operation just described refers to only one of the coordinates of the target spot. In order to obtain both rectangular coordinates of the target, the analysis must be carried out in two perpendicular directions with two arrangements such as the one described with reference to Figures 7 and 8. A complete device capable of providing both coordinates is shown diagrammatically in Figure 9.

At the bottom of the image converter tube I employed, partially shown, there is a cruciform electrode **146** composed of two perpendicular branches **65—66** and **67—68**. The cruciform electrode **146** is connected to the amplifier **158**, with an amplification stabilised by a control circuit **159** (detailed in Figure 11).

The converter tube I also comprises deflecting electrodes made up, for example, of two pairs of standard rectangular plates **60—61** and **62—63**.

This deflecting system receives two complex voltages **200**, **201**, of same wave forms as those described with reference to Figure 6 in order to effect the scanning explained with reference to this Figure, the electronic beam **9** giving, at rest, an image whose centre is on the axis of the cruciform electrode.

Above the deflecting system there is indicated diagrammatically at **156** a possible means of modifying the dimensions of the image, for example a conventional combination of electrodes in annular form constituting so-called electronic lens system, in such a manner that when suitable voltages are applied to this system, the electronic image on the cruciform analysing electrode **146** changes its dimensions, being enlarged or reduced according to the voltages applied on **156**. The use of this complementary device will also be described hereinafter.

The amplifier **158** allows an impulse **21** to pass, which emerges from the threshold **27** when the analysis of the spot caused by the image of the target sighted traverses laterally one of the four branches of the cruciform electrode **146**.

This pulse **21** controls, by means of a pulse generator **160** (to be described with reference to Fig. 11) the release of an unvarying secondary pulse **143** such as explained with reference to Figures 7 and 8. It is applied simultaneously to the control grids of valves of the four mixer-stages **168**, **169**, **170**, **171** (see Figure 14) through the connections **190**, **191**, **192**, **193**.

While in the circuit of Figure 7 there were only two paths to serve, there are here four paths, only two of which can function simultaneously, these pairs of paths acting alternately. In fact, during the lateral analysis, for example, the paths **170** and **171** alone can function, while the paths **168**, **169** will function during the vertical analysis. This result is obtained simply by means of a bistable oscillator or flip-flop device **162** which furnishes a rectangular signal synchronised by the saw-tooth generator **165** (see Fig. 12). The complementary signals **163**, **164** of the bi-stable oscillator are used to block alternately the two output circuits desired and the successive pulses **143** which, alternately, relate to the vertical and horizontal analyses, are successively used in the corresponding circuit. The complementary saw-tooth wave forms **137**, **138** produced by the saw-tooth generator including a phase splitter **165**, are applied to the control grids of the valves as already indicated in the description of Figure 7.

The scanning circuit **161** produces the complex out-of-phase signals **200**, **201**, applied to the four deflecting plates by the line **187**.

The various stages and elements mentioned hereinabove are well known in the art and an example will be given in details hereafter with reference to Figures 11 to 14.

On the terminals **181**, **182**, **183**, **184**, there are four voltages corresponding to the coordinates of the target, which can be used in a control system determining the automatic orientation of the missile towards the target.

When a searcher head has spotted a target and is ready to direct the missile, a new target, may come within the field and give a signal of its own, thus upsetting the steering of the missile. An object of the invention is to provide means for reducing the field observed, so that the analysis is maintained only in the zone of the original target, and operating entirely electronically to achieve this result.

In the present example, the solution consists in using the signal detected and the impulse **143**, which takes place when the target is spotted to control, by means of an integrator and a direct current amplifier circuit **157** (see Fig. 13), the potential of the electronic lenses **156** which determine the diameter of the image formed by the beam **9**.

At the beginning of the spotting the field observed may be very large, with opening of 30 degrees or more, with the whole of the observed field concentrated in an image formed by the beam **9**, but as soon as a target is spotted, the beam **9** becomes enlarged, so that the image is considerably enlarged, and for this reason, the analysing cross **146** scans only part of the image, the central part, that containing the target, because the target spot is automatically displaced to the centre owing to the steering action which is determined by the target itself.

Figure 10 shows a modification of the collector electrode allowing restriction of the field of action by means other than an electronic lens system such as **156**. In this case, the control voltage issuing from **157** (Figure 9) due to the presence of a spot, is applied to a series of complementary pairs of electrodes **151**, **152**, **153**, **154**, arranged on both sides of the four branches of the cruciform analysing electrode **146**, in such a manner that when this potential is applied, the arrival of electrons on the part opposite the cruciform electrode is prevented. But

as these complementary electrodes do not go as far as the centre, when this potential is applied, only the centre remains active, and the analysis can be carried out only in the zone of the centre of the image, that is to say, as if the cruciform electrode were limited in length to a very small part of its four branches disposed round the centre. At the same time, the voltage issuing from **157** is applied through the terminal **202** and the line **203**, to the scanning circuit, which enormously reduces the amplitude of the motion of the image, without the speed of the motion of the image in front of the electrodes being thereby modified, so that the tuned circuits of the amplifier continue to function in a suitable manner with the same preferential frequencies. In this way, there is brought about an automatic contraction of the field, the field being confined to the close proximity of the spotted target.

The complementary electrodes **151**, **152**, **153**, **154**, are distributed round the branches of the collector electrode **146** and they exert no action when no potential is applied to them. The image of the field **1—2—3—4** which when at rest is at the centre, goes, for example, from **208**, **209** to **210**, **211** laterally, in the normal way, but when a target is detected, the orientation of the missile becomes such that the image of the target is carried back to the centre and a potenial applied to the complementary electrodes no longer allows the cross **146** to be sensitive except to non-deflected electrons, that is to say, to the portion of the image comprised in the square **213**, for example.

All the circuits used and shown diagrammatically by rectangles on Figure 9, are known. However, such circuits will be dealt with in detail hereinafter by way of example.

Figure 11 shows the network diagram of the amplifier **158**, the pulse-generator **160** and the control circuit **159**. The cruciform electrode **146** is connected to the grid of a first tuned stage **301** operating at a frequency of say 5000 cycles per second, followed by an aperiodic stage **302** and by a valve **303** which only allows the passage of crests **21** of the modulation (background noise and signal) exceeding a certain level **27**. This action is obtained by giving a substantial negative bias to the grid of the valve **302** and a still more negative bias to the grid of the valve **303**. The grid resistance is made relatively large and the amplifier operates near cut-off. The valves are thus self-polarized, i.e. they do not require an external source of voltage for their polarisation. This self-polarisation lowers the negative bias of the grid by an amount which increases as the background noise increases.

The modulation signal is collected on the plate of the valve **302**, and it is amplified by the valve **306** which feeds a rectifier **307**, supplying by the feed-back circuit **308** the control voltage to be filtered by the tuned circuit **309**, tuned to the frequency of the passage of the successive lines, vertical and horizontal, of the scanning of the image. This tuned circuit **309** is designed for filtering a single frequency and must therefore be of good quality, whereas **307** is merely an integrating circuit for the much higher frequencies of the background noise. The signal separated by the threshold limiter valve **303** is used to release, at each cycle, when the pulse of the signal appears, the discharge of the condenser **310** (belonging to the pulse generator **160**) by means of the thyratron **311**. The condenser is then very rapidly recharged, to be ready for the next cycle. The signal thus produced which is of trapezoidal, nearly rectangular shape, is directed upon the grid of the valve **312** which constitutes a mere phase splitter which supplies at **313** and **314** two invariable pulses, one positive, the other negative, whose amplitude is obtained through the positive and negative limitation of the grid of the valve **312**.

The return circuits of the plates and the screen grids lead to +HT, the negative terminal —HT being the earth.

The relaxation oscillator producing the saw-tooth voltages (circuit **165** of Figure 9) is shown on Figures 12 and 13, where **315** is a thyratron associated with a condenser **316**. The saw-tooth voltage issues from a potential divider **317** and feeds a class-A amplifier **318** operating as a phase splitter which supplies two saw-teeth voltages **137** and **138** in phase opposition on the outputs **321**, **322**. The return of the grid of the thyratron is effected at a suitable negative polarisation for a linear form of inclination of the saw-teeth and an input terminal **323** is provided for a possible synchronisation of the thyratron on an outside signal.

The vertical parts of the teeth of one of the two complementary saw-tooth wave forms act through **324** to control the bi-stable oscillator or so-called ("flip-flop") arrangement composed of two thyratrons **325**, **326**. Such an arrangement is well known in the art. Information relating to its operation and nature may be found in page 47 of the Massachusetts Institute of Technology Series, volume 19 ("Waveforms"). The oscillator supplies two complementary castellated signals **163**, **164**, which are then used in two mixer valves **329**, **330**, where they are superimposed on the saw-tooth wave forms **137** and **138**, so as to suppress alternately on each of the outputs **331**, **332**, one tooth out of two, in such a manner that this suppression should occur alternately on one path and the other, as shown at **333**, **334**. One of the paths, **331** for example, will serve to feed the vertical scanning by means of a suitable circuit, the other path feeding the horizontal scanning.

To produce the scanning signals, for example the vertical scanning, the signal produced on the output **331** is led to the grid **335** of the class-A mixer-valve **337** (Figure 13) of the scanning circuit **161**. This grid **335** also receives the castellated signal **163** through the terminal **338** connected to the terminal **339** of the flip-flop **325—326** (Figure 12) which produces this signal.

The object of this geometrical superimposition of two simultaneous signals is to produce the complex signal **200**, already described, on the plate of the class-A mixer-valve **337**.

This complex signal, which is amplified and placed in phase opposition by the two tubes **341**, **342** and by a phase splitter **343**, is applied to the vertical deflecting plates **62—63** of the image converter tube. The phase splitter **343** is a mere cathode-follower having a balanced charge for the anode and cathode so as to supply two identical output signals in phase opposition with each other.

The return circuits **346**, **347** of these vertical plates is effected through resistors of high value (see **360** and **358** on the Figure 14 for the return **346**).

The mixer-stage **168** of Fig. 9 is detailed in Figure 14, which shows the use of the detected signals, their distribution to the controls of the rocket, and the production of voltages for a particular correction of the trajectory and for the contraction of the field.

The line **350** receives the unvarying pulse **143** caused by the signal of the target, alternately due to the horizontal and vertical analysis of the field.

This line **350** is connected to the output **313** of the pulse generator **160** of Figure 11. The pulse **143** cannot pass indiscriminately into the four mixer-stages **168** to **171** (see Fig. 9), because the latter are blocked one after the other during a quarter of a cycle owing to the castellated voltages **163**, **164** and the saw-tooth voltages **166** and **167**. During the remainder of the time, the unvarying signal **143** will emerge on the plate of the mixer valve of the corresponding stage, with an amplitude depending on its position in time in relation to one of the axes of the image of the field and the integration of this signal will give a voltage which will be a coordinate of the target.

One of the mixer-stages (168) is shown (in Figure 14) to be connected to the inlet 190 of the unvarying pulse 143 at the line 350. The other three paths are connected to the same line at 191, 192, 193.

The signal determining the degree of emergence is made up of the two complementary saw-tooth wave forms 137, 138 of Fig. 12, which are applied to the lines 321 and 322 (see also Figure 8).

The circuit shown is connected at 196 and the saw-tooth voltage controls the grid base potential, already fixed at such a value that the emergence cannot take place except in the second half of the saw-tooth signal, since the negative bias will only allow flow during half the duration of a saw-tooth signal.

Thus, if the unvarying pulse 143 coincides with the middle of the saw-tooth, it will give no output signal whatever, but it will give a signal if it appears in the rising part, this signal being maximum at the peak of the saw-tooth, as explained with reference to Figure 8.

Thus, on the plate of the valve 353, a series of pulses will be collected, which can be integrated. In this way, the integrator circuit 354 will supply an amplitude voltage defining the corresponding coordinate, and this voltage can control the operation of the special direct current valve 355.

The valve 355, at rest, without any signal emerging on 353, has its grid at zero potential when no voltage is applied to its grid circuit 356. For this reason, the voltage at 357, could be adjusted to zero in relation to earth, for example, by effecting the return 358 of the chain 359, 360, 361, at a negative voltage, cancelling the relatively low voltage at 357 for a grid polarisation equal to zero, the return 362 being at 250 volts, for example. But if recurrent signals are detected, the valve 355 will be negatively polarised and will for the maximum recurrent signals attain the cutting off of the plate current, that is to say, the point 357 will be carried to about 200 volts.

More particularly, as soon as a target appears within the field of the optical lens system, the steering means of the rocket (rudder and elevator, or spoilers) immediately react, owing to the very low time constant of the control circuits of the steering means, so as to bring the target spot to the center of the image, or in other words to steer the rocket, so that its axis is orientated towards the target. However this target presumably moves at a high velocity and with an approximately rectilinear path.

Let the spot 16 (Figure 1) move, in the scanned field 1, 2, 3, 4 from top to bottom (say the target is an aircraft which is diving). Within a very short time, the spot 16 is returned, owing to the steering means of the rocket, to the centre of the cruciform electrode 146. However, as the spot moves towards the bottom of the image, to each subsequent analysing cycle, the correction signal such as 145 (Figure 8) has always the same direction (and the same magnitude if the target moves at a uniform velocity). At the output 401 of the valve 353, voltage pulses of same polarity occurs at each analysing cycle. These pulses load the condensers of the circuit 354 and therefore modify the grid bias of the valve 355. As a consequence, the potential at 357 which was zero at the start (image centered on the cruciform electrode), varies and a permanent direct voltage is applied, through 346, to the deflecting plate 62 (Figure 13) which deflects the whole of the image towards the top, that is to say it tends to bring the electronic image of the target back to the center of the cruciform electrode.

Owing to this corrective displacement of the image, the axis of the missile is no longer orientated towards the target but towards a point located ahead of this target, along its path. In other words, the missile is directed, in advance, towards a position which the target will later reach.

Thus, in the case of targets moving transversely with respect to the direction of the missile, it is possible to reduce or even cancel the curvature of its path.

The voltage at 357 will be between 0 and 200 volts and will be proportional to the speed of the target. This voltage can feed one of the deflecting plate returns, as for example 346 of Figure 13, and determine the corrected centering. Complementary voltages can be applied, originating from the inside circuits in this mixer, through the terminals of the returns 356, 363, 364, 365, the last three being connected to the three other paths.

The signals of the input valve 353 of the output circuit, taken in at 401, feed the valve 402, which is connected to the integrator 403, which supplies at 181 one of the four integrated output voltages designed to operate the controls of the rocket through the adequate servomotors such as rams. The terminal 182 is fed by the symmetrical path of 181 of the vertical analysing circuit.

The negative signal 143, taken at the outlet 314 of the pulse generator 160 (Figure 11) produces in the circuit 157 (Figures 9 and 13) a continuous voltage blocking the valve 366, owing to the integrating network 405 in such a manner that when at rest, without any signal, the potential difference at the ends of the resistor 367, which would be 100 volts, for example, in the chain, returns to a negative voltage 368, 369, 370, and falls to 10 volts when the valve 366 is blocked, owing to the presence of a series of pulses 143 at the input 314. The effect of this as shown in Fig. 15 is to truncate the signals 200, 201 applied to the scanning output circuits 343—341—342. In fact, when at rest, the voltage being 100 volts on 367, the rectifiers-limiters 371 and 372 do not go into action, and do not affect the form of the signal 200 or 201 of 80 or 90 volts applied to the phase splitter 343, while if the return voltage of these shunt rectifiers is reduced to +5 volts and −5 volts respectively (10 volts on 367), these rectifiers will cut the crests 226 and 227 (Fig. 15) of the scanning signal. Thus when there is a detected signal, the scanning will be limited in amplitude between the levels 225, but the speed of the image on the course, will remain the same.

Parallel with the voltage that limits the scanning, there will be found on the same chain of resistances 367, 369, 370, at point 406, a voltage which can be fixed by the values of the chain and the negative return potential 368 at zero in the absence of a signal. This potential will be carried to +100 volts, for example, when the valve 366 is blocked by a series of pulses, and this voltage can be applied directly or by means of a relay valve, to the image enlarging electronic system 156 (Fig. 9), so as to reduce the portion used for analysis, or again, to create on the complementary electrodes 151 to 154 (Figs. 9 and 10) the absorptive voltage preventing analysis by part of the branches of the cruciform electrode 146.

What I claim is:

1. An electronically-operating target finding apparatus comprising an optical system for forming an optical image of a field of investigation; means for converting said optical image into an electronic image; an anode surface opposite said electronic image and having a conductive cruciform anode with thin and rectilinear branches perpendicular to each other; electron control means for leading the electronic beam issued from said image to said anode surface in centered position with respect to the center of said cruciform anode; two pairs of deflecting members acting on the path of said electronic beam and adapted to deflect said beam along two perpendicular directions parallel to said branches of the cruciform anode; a relaxation oscillator supplying a saw-tooth voltage; a phase splitter connected to said relaxation oscillator for producing two derived equal saw-tooth voltages in phase opposition; a flip-flop device synchronized by said former saw-tooth voltage and supplying two castellated voltages in phase opposition, of same period as said derived saw-tooth voltages and having an amplitude half of the am-

plitude of said derived voltages; a first mixer stage with two mixer valves in parallel, each having at least a control grid to which are simultaneously applied one of said derived saw-tooth voltages and one of said castellated voltages, the negative part of this latter voltage bringing said mixer valve to cut-off whereby one of said saw-tooth out of two is eliminated; a further mixer stage with two mixer valves in parallel, each having at least a control grid to which are simultaneously applied the output voltage of one valve of said mixer stage and again said castellated voltage, the level of this latter voltage being so adjusted that the output voltage of said valve of said further stage is during the intervals corresponding to the eliminated saw-teeth equal to the mean value of the saw-tooth voltage; connecting means between the output of each of said further mixer stages and one of said pair of deflecting means; an amplifier the input of which is connected to said cruciform anode; a pulse generator connected to said amplifier for producing at least a constant positive pulse when said amplifier gives a signal; two pairs of mixer stages each including a valve having at least a control grid, each pair being connected to said flip-flop device and to said phase splitter for applying to the control grid of each valve the same pair one of said castellated voltages and one of said derived saw-tooth voltages; a connection between said control grid and said amplifier for transmitting said pulses to the same; a source of negative bias for said control grid for biasing it to a voltage value equal to the mean voltage of the saw-tooth voltage plus the voltage of said pulse; and integrating networks connected to the output of said latter mixer stage for collecting electrical energy of the latter.

2. An apparatus as claimed in claim 1 further comprising in the said amplifier valves having control grids and anodes; a feed-back circuit including a tube with a grid and an anode and an integrating network including a double rectifier connected to the anode of said tube, the grid of said tube being connected towards the output of the said amplifier to an anode thereof, and the output of said network towards the input of said amplifier to a control grid thereof.

3. An apparatus as claimed in claim 1 further comprising at the output of the valve of each of the four latter mixer stages a rectifier; an integrating network connected with said rectifier; a valve having a control grid connected with the output of said network; a potential divider in the anode circuit of said tube and a connection between a point of the said potential divider and one of the deflecting members of a pair thereof.

4. An apparatus as claimed in claim 1 in which said pulse generator provides two opposed pulses and further comprising an integrating network including a rectifier for receiving the negative pulses of said opposed pulses; a valve having an anode and a control grid connected to the output of said integrating network; a potential divider forming the anodic circuit of said valve; an electronic lens system in the electron control means for varying the dimension of the electronic image with respect to said optical image; and a connection between a point of said potential divider and said electronic lens system.

5. An apparatus as claimed in claim 1 in which said pulse generator provides two opposed pulses and further comprising an integrating network including a rectifier for receiving the negative pulses of said opposed pulses; a valve having an anode and a control grid connected to the output of said integrating network; a potential divider forming the anodic circuit of said valve; a pair of interconnected complementary electrodes arranged about each branch of the cruciform anode between the end of this branch and a point thereof near but spaced from the center of said cruciform anode; and a connection between a point of said potential divider and said pairs of complementary interconnected electrodes.

6. An apparatus as claimed in claim 1 in which said pulse generator provides two opposed pulses and further comprising an integrating network including a rectifier for receiving the negative pulses of said opposed pulses; a valve having an anode and a control grid connected to the output of said network; a resistance circuit for positive polarisation of said anode; a resistor connected to said anode; two rectifiers of opposed polarities respectively connected to the ends of said resistor; and a connection between the outputs of said rectifiers and the said connecting means between the output of each of said further mixer-stages and one of said pairs of deflecting means.

References Cited in the file of this patent

UNITED STATES PATENTS

1,747,664	Droitcour	Feb. 18, 1930
2,403,975	Graham	July 16, 1946
2,413,870	Hammond	Jan. 7, 1947
2,425,956	Salinger	Aug. 19, 1947
2,532,063	Herbst	Nov. 28, 1950