Oct. 9, 1962 M. D. ELLEDGE 3,057,230

SENSITIVE DRILL PRESS

Filed May 16, 1960 2 Sheets-Sheet 1

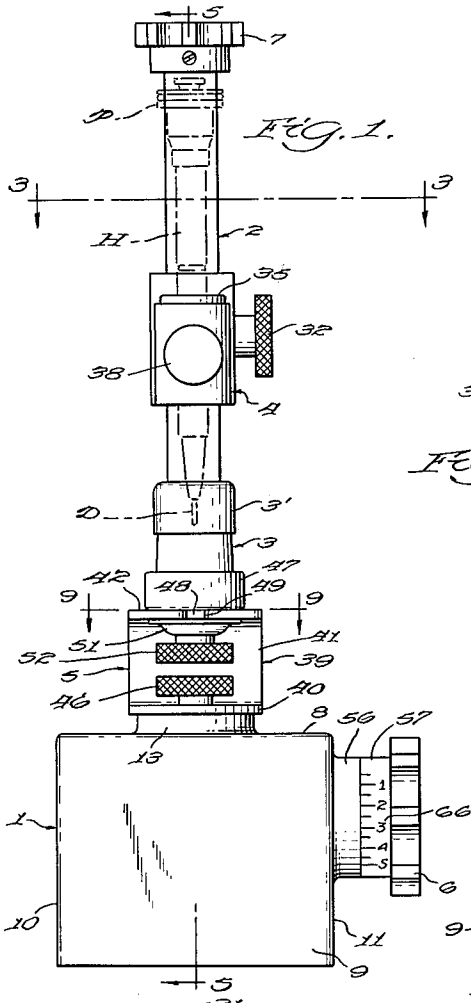

Fig. 1.

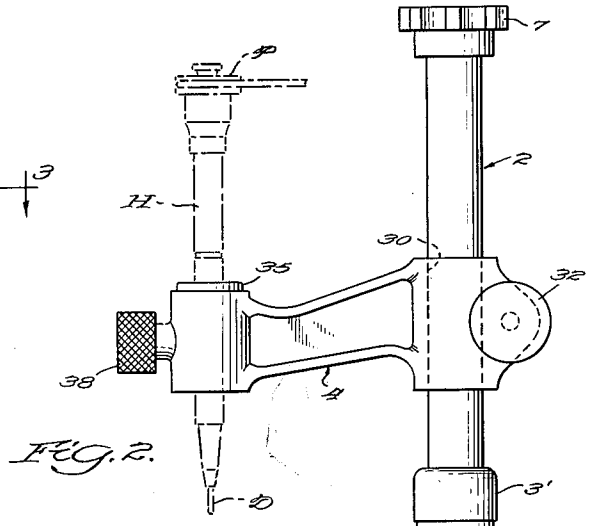

Fig. 2.

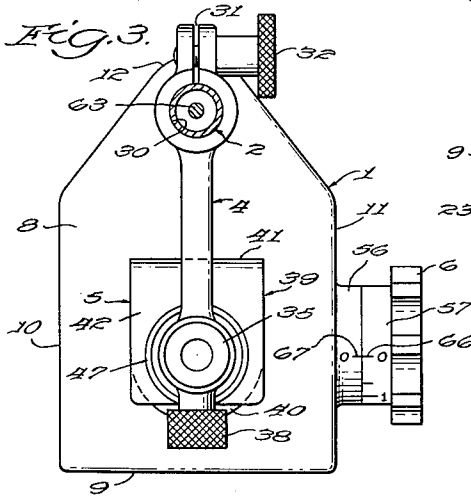

Fig. 3.

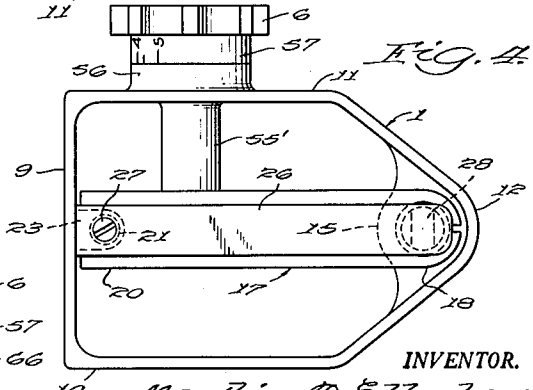

Fig. 4.

INVENTOR.

Martin D. Elledge.

BY

Harold J. LeVesconte

Atty.

Oct. 9, 1962 M. D. ELLEDGE 3,057,230

SENSITIVE DRILL PRESS

Filed May 16, 1960 2 Sheets-Sheet 2

Fig. 8.

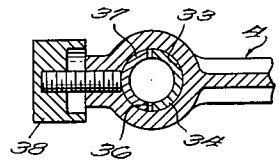

Fig. 6.

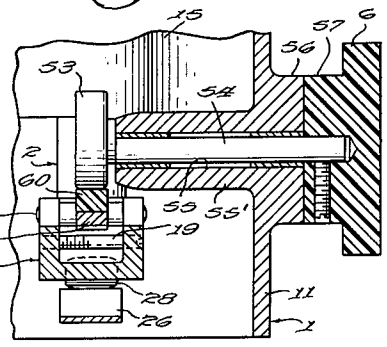

Fig. 5.

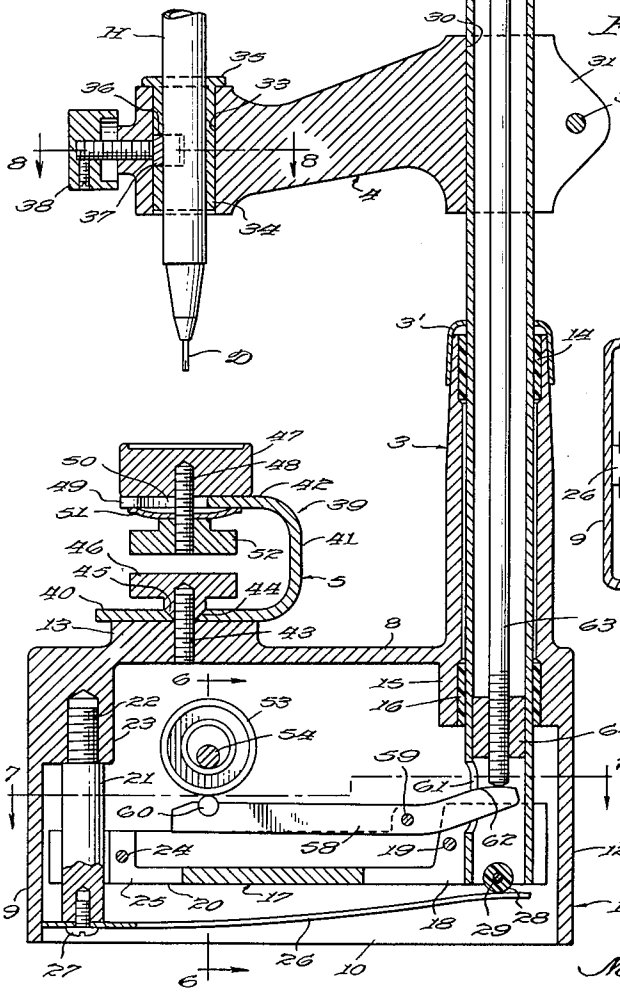

Fig. 9.

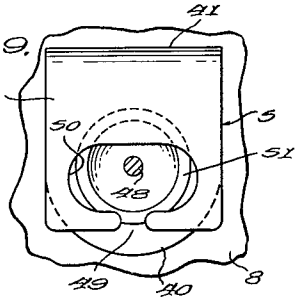

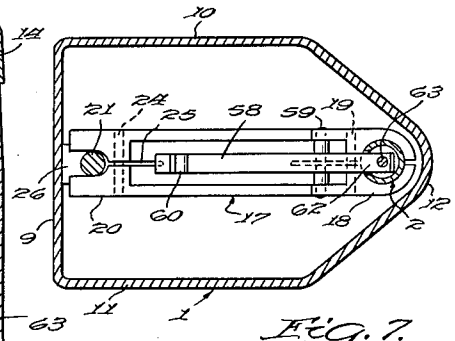

Fig. 7.

INVENTOR.

Martin D. Elledge.

BY

Harold J. LeVesconte.

Atty.

United States Patent Office

3,057,230

Patented Oct. 9, 1962

3,057,230

SENSITIVE DRILL PRESS

Martin D. Elledge, 1703 S. Magnolia Ave., Monrovia, Calif.

Filed May 16, 1960, Ser. No. 29,377

5 Claims. (Cl. 77—19)

This invention relates to improvements in high speed, sensitive drilling machines of the general type described and claimed in my prior Patent No. 2,893,271 granted July 7, 1959.

The principal object of the invention is to provide a sensitive drilling machine for dental laboratory operations, e.g., drilling fastening receiving holes in artificial teeth, and in which a suitable work holding means is combined with a mounting and holding means for the handpiece of a dental engine whereby the power for the drilling operations may be derived from the motor and spindle driving means of the dental engine.

Another object of the invention is to provide a sensitive drilling machine for dental laboratory operations in which the drill is vertically, manually reciprocable into and out of engagement with the work through a predetermined range of movement and wherein means is provided for accurately vertically adjusting the position of such range of movement relative to the work.

A further object of the invention is to provide a sensitive drilling machine for dental laboratory operations which does not require a separate motor for operating the drill and which, therefore, is economical to manufacture and can be sold at a price which is attractive to purchasers, which is simple in construction and reliable for its intended purpose.

With the foregoing objects in view, together with such additional objects and advantages as may subsequently appear, the invention resides in the parts, and in the construction, combination and arrangement of parts, described, by way of example, in the following specification of a presently preferred embodiment of the invention, reference being had to the accompanying drawings which form a part of said specification and in which drawings:

FIG. 1 is a front elevational view of a sensitive drilling machine embodying the present invention, the incorporated dental engine handpiece being shown in broken lines,

FIG. 2 is a right hand side elevational view of the device shown in FIG. 1,

FIG. 3 is a top plan view taken on the section line 3—3 of FIG. 1,

FIG. 4 is a bottom plan view of the drilling machine,

FIG. 5 is an enlarged scale, longitudinal, sectional view taken on the line 5—5 of FIG. 1,

FIG. 6 is a further enlarged, fragmentary sectional view taken on the line 6—6 of FIG. 5,

FIG. 7 is a reduced scale, transverse, sectional view of the base taken on the line 7—7 of FIG. 5,

FIG. 8 is a transverse, sectional view of the handpiece holding means taken on the line 8—8 of FIG. 5, and

FIG. 9 is a fragmentary, top plan view of the horizontal position adjusting means of the work support, the view being taken on the line 9—9 of FIG. 1.

Referring to the drawings, the illustrated embodiment of the invention comprises, in general, a hollow base 1 of modified pentagonal configuration in plan, in which a vertically reciprocable column member 2 is slidably carried in a sleeve portion 3 formed as an integral part of the base 1, a bracket arm 4 vertically adjustable on said column and adapted to carry a dental engine handpiece in vertical position, work supporting means 5 mounted on the base, manually operable means including a hand knob 6 for reciprocating the column, and means including a hand knob 7 for vertically adjusting the column relative to the column reciprocating means.

The base 1 includes a top wall 8 and an integral depending skirt comprising a front wall 9, side walls 10 and 11 extending rearwardly from the ends of said front wall parallel to each other and which adjacent to the rear end of the base converge to form a bluntly rounded, pointed rear portion 12. The column supporting sleeve portion 3 rises from the top wall 8 of the base adjacent to the said point of convergence of said side walls. A boss 13 on the forward top wall 8 of the base serves as a mounting means for the work supporting means 5. The upper end of the sleeve portion 3 of the base is provided with a bushing 14 and an integral collar portion 15 depending from the under side of the top wall 8 in axial alignment with the sleeve 3 carries a bushing 16 axially aligned with the bushing 14. The column 2 is guided by and is given bearing support solely by these two bushings. The upper end of the sleeve 3 carries a dust cap 3' through which the column 2 extends. The column 2 is formed from rigid tubular material and within the base adjacent to the lower end of the base it carries a horizontal, forwardly extending guide arm 17 having a split end 18 contoured to engage the periphery of the column and carrying a clamp screw 19 which is operable to clamp the guide arm to the lower end of the column by tending to draw the opposite sides of said split end toward each other. The forward end 20 of the guide arm 17 is forked to slidingly engage the sides of a depending stud 21 having a threaded end 22 screwed into a boss 23 depending from the inner face of the top wall 8 at the junction thereof with the front wall 9 at the longitudinal center vertical plane of the base 1. A screw 24 extending across a slot 25 inwardly of the forked end 20 of the guide arm, affords means by which the said forked end may be adjusted to be freely, slidable along the stud 21 without lateral play. A leaf spring 26 having one end thereof secured by a screw 27 to the lower end of the stud 21 has its free end engaging a roller 28 mounted on an axle 29 carried by the guide member 17, the roller being disposed within the lower end of the column 2. By its bias, the spring 26 tends constantly to move the column 2 and the components attached to the column to the upper end of the range of reciprocatory movement thereof. The means by which the said range of reciprocatory movement is determined will be later described.

The bracket arm 4 at one end thereof is provided with a vertical bore 30 through which the column 2 extends, said bore being interrupted by a clamping slot 31 across which a clamp screw 32 extends for tightening and loosening the clamp to secure the bracket arm in a desired position along the column above the upper end of the sleeve portion 3. The bracket arm 30 extends generally laterally forward and terminates in an enlarged end having a vertical bore 33 extending therethrough. Loosely disposed in the bore 33 is a bushing 34 having a head flange 35 engaging the upper face of the bracket arm, the bore of said bushing being that which will loosely receive the body of a handpiece H of a dental engine (now shown) and the handpiece being driven by the usual belt means including a pulley P by the dental engine motor. About midway of its length, the bushing has a transversely extending slot 36 and a sectoral clamp member 37 is disposed in this slot. The bushing is so rotatively positioned in the bore 33 that the clamp member 37 is disposed opposite a clamp screw 38 threaded into the wall surrounding the bore 33 whereby the handpiece may be clamped in any desired position in the bushing without deleterious localized stress on the exterior of the handpiece and at the same time, the bushing 34 is adequately clamped in the bore 33 by the force exerted by the clamp screw 38. It will be understood that to adapt the invention to handpieces having different diameters of body members, bushings having different internal bores may be provided, it

being expected that any given one of these machines will be thus adapted to the handpiece of the dental engine of the individual user.

The work supporting means 5 includes a bracket 39 comprising a strip of metal bent on itself to form a lower horizontal limb 40, a vertically extending limb 41 and an upper horizontal limb 42 disposed in spaced parallel relation above the limb 40. The boss 13 of the base carries a vertically extending threaded stud 43 which projects through a countersunk hole 44 in the limb 40; said countersunk hole being engaged by the correspondingly tapered end 45 of a clamp nut 46 on the stud 43 to detachably secure the bracket to the base as most clearly shown in FIG. 5.

The work holder comprises a shallow cup 47 in which the workpiece is secured by embedding it in wax, said cup having a depending stud 48. The end of the work holder supporting limb 42 is provided with a slot which, at is outer end 49, is only sufficiently wide to freely admit passage of the stud 48 therethrough. At its inner end, the slot is widened as at 50 to provide a wide range of movement of the stud 48 and work holder 47 relative thereto. A washer 51 is carried by the stud 48 at the under side of the limb 42 and is of sufficient diameter to extend across the widened portion 50 of the slot in all positions of the stud therein and a hand nut 52 on the stud 48 below the washer 51 serves to clamp the work holder in any desired lateral position on the surface of the limb 42 within the limits of the slot portions 49 and 50.

The reciprocation of the column 2 and the components thereto is achieved by a rotatable eccentric member 53 mounted within the base 1 on a horizontal shaft 54 which is freely rotatable in bushings carried in a bore 55 extending axially through a boss 55′ carried by the inner face of the base side wall 11, said bore thence extending through a larger diameter boss 56 on the outer face of the side wall 11. Exteriorly of the boss 56, the shaft 54 carries the hand knob 6 which is provided with a shoulder portion 57 mating with the boss 56. The engagement of the confronting sides of the eccentric member and hand knob shoulder with the end faces of the bosses 55′ and 56 prevents endwise movement of the shaft 54.

The guide member 17 carries a lever 58 extending parallel thereto and above the guide member, said lever being pivoted about a horizontal pin 59 adjacent to the end of said guide member which engages the column 2. One end of the lever 58 extends beneath the eccentric member 53 and carries a low friction shoe element 60 preferably formed of nylon or Teflon and which engages the periphery of the eccentric member 53. The opposite end of the lever 58 extends into an opening 61 in the side of the column 2 and presents a curved cam face 62 which is engaged by the end of an adjusting screw 63 which is threaded through a nut element 64 fixed within the column 2 immediately above the opening 61, said adjusting screw thence extending upwardly through the column and at the upper end thereof carrying a collar 65 which is rotatable in the upper end of the column 2 and above the collar 65, the screw 63 carries the hand knob 7. By rotating the screw 63, the angular position of the lever 58 will be shifted with resultant change in the vertical position of the column, the spring 26 acting constantly to urge the column upwardly and thus to maintain the ends of the lever 58 in contact with the eccentric member 53 and the screw 63. By reason of the position of the pivot pin 59 adjacent to the end of the lever 58 engaged by the screw 63, the effect of endwise movement of the screw 63 is multiplied so that a wide range of adjustment is achieved with a relatively small amount of endwise movement of the screw 63.

Rotation of the hand knob 6 through a half revolution determines the maximum extent of vertical operating movement of the column and a set of graduations 66 carried by the hand knob collar portion 57 meeting with an index line 67 on the boss 56 indicates the extent of penetration of the work by a drill D carried by the handpiece H.

The use of the drill is believed to be obvious. The pressure of the spring 26 constantly maintains the column 2 and the components of the device carried thereby at its uppermost range of movement. When the device is to be used, the handpiece of the dental engine is inserted and clamped in the outer end of the bracket 4 and the bracket is adjusted along the column to the approximate position in which it is expected to be used. The workpiece having been previously secured in the work holder cup 47 is next mounted on the machine by securing the cup to the limb 42 of the work holding bracket 39. The column is then adjusted by rotation of the hand knob 7 until the drill is in close proximity to the workpiece and then any necessary lateral shifting of the workpiece relative to the drill is achieved. When the position of the drill and the workpiece is set, the drill is rotated by actuation of the dental engine motor and the hand knob 6 is then turned to move the drill down against the work. Ordinarily the drill is not held in constant contact with the work but is intermittently brought in contact therewith until the desired depth of hole is achieved. If the depth of penetration by the half rotation of the hand knob 6 and of the eccentric member 53 is insufficient, further adjustment can be achieved through the hand knob 7. Due to the fact that the bias imposed by the spring 26 is barely sufficient to lift the column and its associated parts to the upper extent of movement, the drill is very sensitive to slight differences in resistance deriving from engagement of the drill with the work, so that the drilling operation may proceed with the lightest possible pressure on the workpiece so that the workpiece is not broken or damaged by excess pressure.

While in the foregoing specification there has been described, by way of example, a presently preferred embodiment of the invention, it will be appreciated that in the light of this disclosure changes and modifications will suggest themselves to others who are skilled in the art to which the invention appertains. Consequently, it will be understood that the invention is not to be deemed to be limited to the foregoing disclosure and that the invention includes as well all such changes and modifications in the parts, and in the construction, combination and arrangement of parts as shall come within the purview of the appended claims.

I claim:

1. In a drilling machine, a base having a side wall and a top wall, said top wall having means for attaching a work support thereon, a vertically disposed guide means carried by said base and extending upwardly above the plane of said top wall of said base at one side of said work support attaching means, a column guided for reciprocation by and extending above said guide means, a laterally extending bracket on said column above said guide means adapted to carry a drill spindle and bearing means therefor in a vertical attitude above a work support mounted on said base, spring means constantly urging said column upwardly, manually operable means for moving said column downwardly in opposition to the bias of said spring means for causing a drill carried by the spindle to engage a work piece on the work support, a manually adjustable screw extending longitudinally of and within said column, and devices operated by said screw for shifting the vertical position of said column relative to said manually operable means.

2. A drilling machine as claimed in claim 1 in which said manually adjustable means for adjusting the vertical position of said column relative to said manually operable means includes a hand knob on the exterior of the machine.

3. A drilling machine as claimed in claim 2 in which said manually operable means comprises a manually rotatable cam mounted in said base sidewall and a cam follower means carried by said column and engaging said

cam, in which said hand knob is fixed to said vertically extending screw, and in which said vertically extending screw threadedly engages said cam follower to vary the position thereof with resultant vertical adjustment of the position of said column relative to said manually operable means.

4. In a drilling machine, a base having a side wall and a top wall, said top wall having means for attaching a work support thereon, a vertically disposed sleeve formed integrally with said base and extending through said top wall and thence upwardly above the plane of said top wall, disposed at one side of said work support attaching means, a cylindrical column reciprocable in said sleeve and extending above said sleeve at its upper end and below said top wall at its lower end, a laterally extending bracket carried by said column, above said sleeve and being adapted to carry the hand piece of a dental engine in a vertical position disposed with the drill chuck end thereof below said bracket and above a work support mounted on said base, spring means carried by said base constantly urging said column upwardly, means preventing turning movement of said column comprised of a laterally extending guide member carried by said column below said top wall of said base and a vertical guide carried by said base laterally spaced from said column and slidingly engaged by said guide member, manually operable means for moving said column downwardly in opposition to the bias of said spring means for causing a drill carried by said hand piece to engage a work piece on the work support comprising a manually rotatable cam mounted on said base sidewall and a cam follower means carried by said guide member and maintained in contact with said cam by said spring means, and a vertically operable screw extending longitudinally within said column and engaging said cam follower for adjustably varying the position of said follower relative to said guide member with resultant shifting of said column vertically relative to said cam.

5. A drilling machine as claimed in claim 4 in which said cam follower is pivotally mounted for movement about a horizontal axis on said column guide member at a point closer to said column than to said cam and in which said cam follower includes a portion thereof extending into said column for engagement by said manually adjustable screw means.

References Cited in the file of this patent

UNITED STATES PATENTS

695,902	Bowker et al.	Mar. 25, 1902
1,497,579	Muehlmatt	June 10, 1924