April 21, 1953 B. BECKER 2,635,605

DEVICE FOR SOFTENING BEARDS OR FACE STEAMERS

Filed Jan. 2, 1951

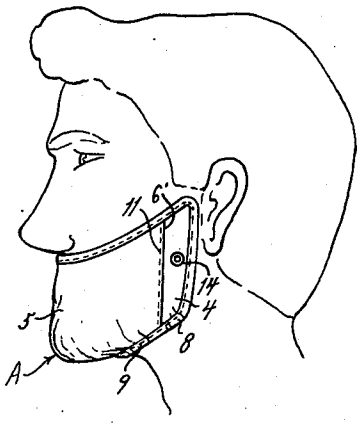

FIG. 1.

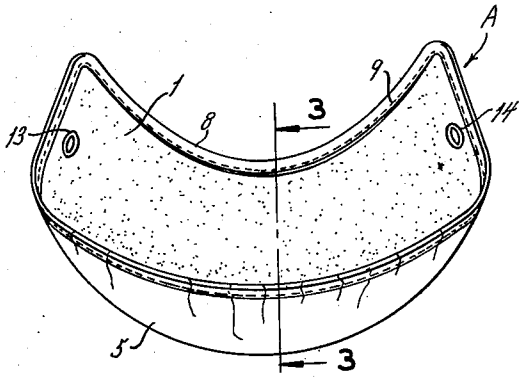

FIG. 2.

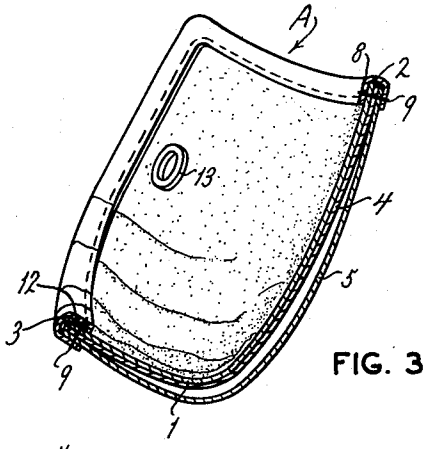

FIG. 3.

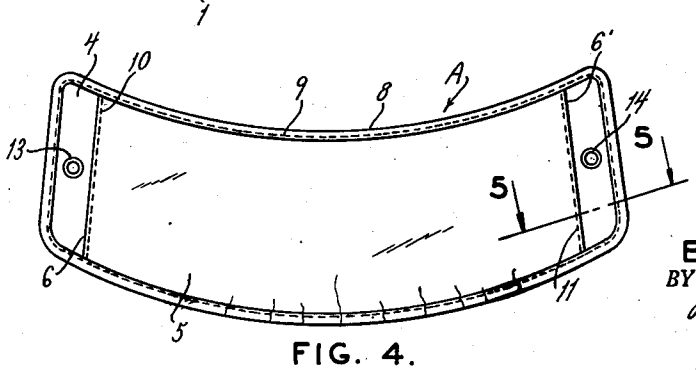

FIG. 4.

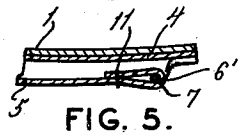

FIG. 5.

INVENTOR.
BENJAMIN BECKER
BY
ATTORNEY

Patented Apr. 21, 1953 2,635,605

UNITED STATES PATENT OFFICE

2,635,605

DEVICE FOR SOFTENING BEARDS OR FACE STEAMERS

Benjamin Becker, St. Louis, Mo.

Application January 2, 1951, Serial No. 204,001

3 Claims. (Cl. 128—380)

1

This invention relates in general to certain new and useful improvements in devices for softening beards or face steamers and, more particularly, to a beard-softening pad adapted to be saturated with warm water and held against the face to soften the beard of a man's face preparatory to shaving.

It is, of course, well recognized by all men who shave regularly with straight edge razors or safety razors that the shaving operation is materially facilitated by softening the beard preparatory to shaving. For generations, barbers have been applying hot towels to the faces of their customers to soften the beard, but this procedure is not quite so simple or convenient when practiced by men who shave themselves because the hot water from the towel runs down the shirt front and the arms of the user and the hot water itself drains away very rapidly when a man, who is shaving himself, has to lean over the wash basin and hold a water-soaked towel against his beard. Hence the application of a hot towel to one's own beard is an inconvenient, messy, and generally unsatisfactory procedure.

It is, therefore, the primary object of the present invention to provide a pad-like shaving accessory which is simple and economical in construction and can be quickly and readily applied to one's own face to produce a highly effective beard-softening action.

It is another object of the present invention to provide a device of the type stated which will retain hot water against the face without any appreciable amount of dripping or draining while being held against the face.

It is also an object of the present invention to provide a device of the type stated which is inexpensive and can readily be drained out after use and hung up to dry and will not become sour or ill-smelling due to incomplete drying out.

With the above and other objects in view, my invention resides in the novel features of form, construction, arrangement, and combination of parts presently described and pointed out in the claims.

In the accompanying drawing:

Figure 1 is a side elevational view of a beard-softening pad constructed in accordance with and embodying the present invention, illustrating the beard-softening pad as it is applied in actual use to the face;

Figure 2 is a rear elevational view of the beard-softening pad;

Figure 3 is a transverse sectional view taken along line 3—3 of Figure 2;

2

Figure 4 is a plan view of the front side of the beard-softening pad; and

Figure 5 is a fragmentary sectional view taken along line 5—5 of Figure 4.

Referring now in more detail and by reference characters to the drawing, which illustrates a preferred embodiment of the present invention, A designates a beard-softening pad comprising a somewhat oblong fabric section 1 made of turkish toweling or other similar water-absorbent material having arcuately curved longitudinal margins 2, 3, and provided upon its outer face with an identically shaped section of canvas lining 4, which is, in turn, provided upon its outer face with a loosely fitted facing 5 of waterproof material, such as Vinylite plastic, Pliofilm, polyethylene, or the like, the latter being somewhat shorter in length than the former, so that its lateral margins 6, 6', terminate in inwardly spaced parallel relation to the lateral margins of the toweling and lining sections 1, 4. The margins 6, 6', of the facing 5 are turned under and hemmed around lengths of cording 7, as shown in Figure 5, and cut slightly fuller in transverse length, so that they will bulge out slightly to permit free passage of air between the facing 5 and the lining 4 when the beard-softening pad A is hung up to dry, as will be presently more fully pointed out. The entire unit is peripherally bound by a continuous section of binding tape 8 folded over and secured by a continuous line of stitches 9 around all four margins. It is to be noted in this connection, however, that only the two longitudinal margins of the waterproof facing 5 are secured under the binding tape 8, the lateral margins 6, 6', being turned down and neatly hemmed by lines of stitches 10, 11, respectively. Enclosed within the binding tape 8 and extending along the lower margin 3 is a length of pre-stretched elastic tape 12, which, after stretching and release, will draw the lower margin 3 into a series of gathers, producing an over-all cupping effect, as best seen in Figure 2 and for purposes presently more fully appearing.

In the unfaced space outwardly of the facing margins 6, 6', the toweling and lining sections 1, 4, are perforated and provided with eyelets 13, 14, by which the beard-softening pad A may be hung up to dry between periods of use.

In use, the beard-softening pad A may be manually held by the user under a hot water faucet or dipped into a wash bowl which has been filled with hot water, so that the toweling section 1 will become thoroughly saturated. As the beard-softening pad A is lifted out of the water, the excess moisture on the outer face will drain out

and any moisture that is caught between the lining 4 and facing 5 will quickly and readily run off, so that the device will not drip water as it is handled. The beard-softening pad A is then placed around the jaws under the chin with its cupped margin 3 presented rearwardly toward the neck. As the pad is pressed in place against the cheeks by the hands of the user, the elastic section 12 will yield sufficiently, so that the pad will conform substantially well to the contours of the user's chin. The waterproof impervious facing 5 will hold the heat in, so to speak, and will also prevent hot water from being squeezed out of the fabric and dropping down over the chest and arms of the user. Because the facing is fitted loosely, there will be a certain amount of free space or sagging between the facing 5 and the adjacent surface of the lining 4 which will act as a bag-like water-catching element into which will flow any excess water which is squeezed outwardly from the pad as it is held against the cheeks. To whatever extent this occurs, the liquid so accumulating will actually be held around the point of the chin where the whiskers are usually toughest and thus the whiskers in this region of the chin will receive the best soaking in hot water and will be well softened for shaving purposes. After the pad has performed the desired function, it may be manually removed from the face and upended over the wash basin, so that any water which has accumulated between the facing 5 and the lining 4 can drain out by gravity. Thereupon, the device may be squeezed to remove as much retained water as possible and the beard-softening pad can then be hung up to dry on any convenient hook or nail until the next time it is required for use.

It should be understood that changes and modifications in the form, construction, arrangement, and combination of the several parts of the beard-softening pad may be made and substituted for those herein shown and described without departing from the nature and principle of my invention.

Having thus described my invention, what I claim and desire to secure by Letters Patent is:

1. A beard-softening pad comprising an oblong section of water-absorbent material, a facing panel of water-impervious material substantially shorter than the oblong section and secured thereto along its longitudinal margins but being free along its transverse margins, and an elastic tape secured along one longitudinal margin and being initially stretched during securement so as to hold said longitudinal margin in a series of gathers and thereby produce an expansible cupped region along the central portion of said margin.

2. A beard-softening pad comprising an oblong section of water-absorbent material, and a facing panel of water-impervious material substantially shorter than the oblong section and secured thereto along its longitudinal margins but being free along its transverse margins, said facing panel being somewhat wider than the oblong section so as to bulge outwardly therefrom in the provision of a water-catching bag-like element when the pad is held up around the face of the user for softening the beard preparatory to shaving.

3. A beard-softening pad comprising a substantially oblong section of water-absorbent material, and a facing panel of water-impervious material substantially shorter than the oblong section and secured thereto along its longitudinal margins in symmetrical relation to the oblong section with respect to its transverse ends so that the transverse ends of the panel of water-impervious material are spaced inwardly equidistantly from the adjacent transverse ends of the oblong section of water-absorbent material, said panel of water-impervious material further being free along its transverse margins and being somewhat wider than the oblong section of water-absorbent material, so as to bulge outwardly therefrom in the provision of a water-catching bag-like element when the pad is held up around the face of the user for softening the beard preparatory to shaving and so that the facing panel of water-impervious material will normally stand somewhat outwardly away from the oblong section of water-absorbent material when the beard-softening pad is hung up to dry so that air will circulate freely through the openings provided by the detached transverse end margins.

BENJAMIN BECKER.

References Cited in the file of this patent

UNITED STATES PATENTS

Number	Name	Date
1,106,300	Graham	Aug. 4, 1914
2,082,153	Dopyera	June 1, 1937

FOREIGN PATENTS

Number	Country	Date
233,722	Great Britain	July 16, 1925
737,907	France	Oct. 10, 1932