(12) INTERNATIONAL APPLICATION PUBLISHED UNDER THE PATENT COOPERATION TREATY (PCT)

(19) World Intellectual Property Organization
International Bureau

(43) International Publication Date
1 December 2005 (01.12.2005)

PCT

(10) International Publication Number
WO 2005/114308 A1

(51) International Patent Classification[7]: G02F 1/025, 1/225

(21) International Application Number: PCT/US2005/015339

(22) International Filing Date: 3 May 2005 (03.05.2005)

(25) Filing Language: English

(26) Publication Language: English

(30) Priority Data:
60/570,351 12 May 2004 (12.05.2004) US
60/613,912 28 September 2004 (28.09.2004) US

(71) Applicant *(for all designated States except US)*: **MASSACHUSETTS INSTITUTE OF TECHNOLOGY** [US/US]; 77 Massachusetts Avenue, Cambridge, MA 02139 (US).

(72) Inventors; and

(75) Inventors/Applicants *(for US only)*: **GAN, Fuwan** [CN/US]; 143 Albany Street, #135, Cambridge, MA 02139 (US). **KAERTNER, Franz, X.** [DE/US]; 77 Newtonville Avenue, Newton, MA 02458 (US).

(74) Agents: **CONNORS, Matthew, E.** et al.; Gauthier & Connors LLP, 225 Franklin Street, Suite 3300, Boston, MA 02110 (US).

(81) Designated States *(unless otherwise indicated, for every kind of national protection available)*: AE, AG, AL, AM, AT, AU, AZ, BA, BB, BG, BR, BW, BY, BZ, CA, CH, CN, CO, CR, CU, CZ, DE, DK, DM, DZ, EC, EE, EG, ES, FI, GB, GD, GE, GH, GM, HR, HU, ID, IL, IN, IS, JP, KE, KG, KM, KP, KR, KZ, LC, LK, LR, LS, LT, LU, LV, MA, MD, MG, MK, MN, MW, MX, MZ, NA, NI, NO, NZ, OM, PG, PH, PL, PT, RO, RU, SC, SD, SE, SG, SK, SL, SM, SY, TJ, TM, TN, TR, TT, TZ, UA, UG, US, UZ, VC, VN, YU, ZA, ZM, ZW.

(84) Designated States *(unless otherwise indicated, for every kind of regional protection available)*: ARIPO (BW, GH, GM, KE, LS, MW, MZ, NA, SD, SL, SZ, TZ, UG, ZM, ZW), Eurasian (AM, AZ, BY, KG, KZ, MD, RU, TJ, TM), European (AT, BE, BG, CH, CY, CZ, DE, DK, EE, ES, FI, FR, GB, GR, HU, IE, IS, IT, LT, LU, MC, NL, PL, PT, RO, SE, SI, SK, TR), OAPI (BF, BJ, CF, CG, CI, CM, GA, GN, GQ, GW, ML, MR, NE, SN, TD, TG).

[Continued on next page]

(54) Title: HIGH-SPEED ELECTRONIC CARRIER-INJECTION MODULATOR BASED ON HIGH-INDEX-CONTRAST Si-WAVEGUIDE

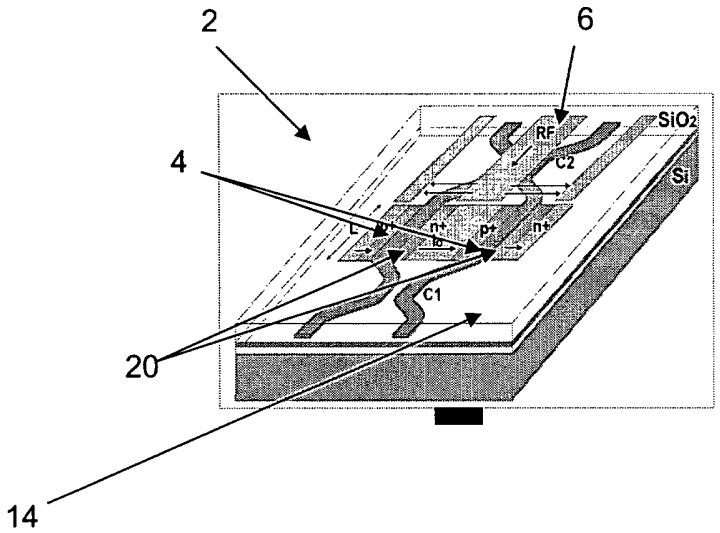

(57) Abstract: An opto-electronic modulator includes a Mach-Zehrader structure that comprises p^+in^+-diodes in both arms of the Mach-Zehrader structure. The Mach-Zehrader structure is formed by waveguides so as to confine an optical mode in the opto-electronic modulator.

WO 2005/114308 A1

Published:
— *with international search report*

For two-letter codes and other abbreviations, refer to the "Guidance Notes on Codes and Abbreviations" appearing at the beginning of each regular issue of the PCT Gazette.

HIGH-SPEED ELECTRONIC CARRIER-INJECTION MODULATOR BASED ON HIGH-INDEX-CONTRAST Si-WAVEGUIDE

PRIORITY INFORMATION

This application claims priority from provisional application Ser. No. 60/570,351 filed May 12, 2004 and provisional application Ser. No. 60/613,912 filed September 28, 2004, both of which are incorporated herein by reference in their entireties.

BACKGROUND OF THE INVENTION

The invention relates to the field of modulators, and in particular to an electrically driven Mach-Zehnder waveguide modulator based on high-index contrast silicon waveguide technology and electronic carrier injection.

The development of future electronic-photonic integrated circuits based on silicon technology critically depends on the availability of CMOS-compatible high-speed modulators that enable the interaction of electronic and optical signals. Si-based phase modulators using the plasma dispersion effect in a p^+in^+-structure have been proposed for silicon-based opto-electronic phase and amplitude modulators. Switching speeds up to 10MHz have been demonstrated and up to 1 GHz are predicted. The speed of the response in these devices is limited by carrier recombination. Very recently a modulator based on a MOS structure has been proposed operating at 1GHz speed. However, this device needs an applied voltage of 10V for achieving a π phase shift within 1cm length and showed 6.7 dB loss due to the doped polysilicon rib-waveguide. Much lower drive voltage in the order of 1-5V is needed, when feed by CMOS circuitry. The same is true for top contacted rib-waveguides of previously proposed pin-structures.

SUMMARY OF THE INVENTION

According to one aspect of the invention, there is provided an opto-electronic modulator. The opto-electronic modulator includes a Mach-Zehnder structure that comprises p^+in^+-diodes in both arms of the Mach-Zehnder structure. The Mach-Zehnder structure is formed by waveguides so as to confine an optical mode in the opto-electronic modulator.

According to another aspect of the invention, there is provided a method of forming an opto-electronic modulator. The method includes forming a Mach-Zehnder structure that comprises p^+in^+-diodes in both arms of the Mach-Zehnder structure. Moreover, the method includes the use of waveguides to construct the Mach-Zehnder

structure so as to confine an optical mode in the opto-electronic modulator.

According to another aspect of the invention, there is provided an opto-electronic modulator having a Mach-Zehnder structure that comprises p^+ and n^+ doped regions in both arms of the Mach-Zehnder structure. A The Mach-Zehnder structure is formed by waveguides so as to confine an optical mode in the opto-electronic modulator.

BRIEF DESCRIPTION OF THE DRAWINGS

FIG. 1A is a schematic diagram illustrating an externally-biased Mach-Zehnder modulator with coplanar RF-feeder; FIG. 1B is a schematic diagram illustrating a split-ridge waveguide pin-phase modulator with single mode intensity profile;

FIG. 2A is a graph illustrating the modulator I-V-characteristics and maximum device temperature Tm at different operating points and carrier lifetimes τ =10ps, 100ps, 1ns; FIG. 2B is a graph illustrating the effective index change due to plasma and thermal effects for τ =10ps, 100ps, and 1ns;

FIG. 3A is a graph illustrating the linearity of the effective index modulation in a pin-section; FIG. 3B is a graph illustrating the linearity of the MZ-modulator transmission, at bias voltage $V_{DC} = 4V$, modulation Frequency f=10GHz, carrier lifetime τ =10ps;

DETAILED DESCRIPTION OF THE INVENTION

Si-based phase modulators using the plasma dispersion effect in a p^+in^+-structure have been proposed for silicon-based opto-electronic phase and amplitude modulators. Switching speeds up to 10MHz have been demonstrated and up to 1 GHz are predicted. The speed of the response in these devices is limited by thermal effects and carrier recombination times. Very recently a modulator based on a MOS structure has been proposed operating at 1GHz speed. However, this device needs an applied voltage of 10V for achieving a phase shift within 1cm length and showed 6.7 dB loss due to the doped polysilicon rib-waveguide. Much lower drive voltage in the order of 1-5V is needed, when feed by CMOS circuitry. The same is true for top contacted rib-waveguides of previously proposed pin-structures. Here a Si/SiO_2 high-index contrast waveguide modulator is proposed that shows corner frequencies of up to at least 24 GHz.

A schematic layout of modulator 2 in accordance with the invention is shown in FIGs. 1A-1B. FIG. 1A shows a conventional Mach-Zehnder arrangement, and FIG. 1B

shows the most important sub-component 12 of the modulator 2, the electrically driven phase modulator section. Here one can use a split-rib waveguide 12, i.e. the high-index rib 12 is separated from the high-index slab 18 via a thin low index layer 16, which combines the following advantages of a buried waveguide and a rib waveguide, as shown in FIG. 1B. The optical mode is mostly confined in the buried section of the waveguide, 94%, which is isolated so that injected carriers cannot escape in transverse directions. Since the SiO_2-isolating layer 16, which splits the rib-waveguide 12, is rather thin (d1 = 100nm), there is good heat sinking to the silicon slab portion 18 of the waveguide. The optical mode is well confined within the rib 12 in horizontal direction, which greatly reduces loss due to the highly doped contact regions and sidewall roughness.

Even doping levels as high as $n_D = 10^{19}cm^{-3}$ in the contact regions 20 lead only to α=2.8/cm optical absorption. In other embodiments of this invention different waveguide geometries might be used.

The p^+in^+-diodes in both arms 4 of the Mach-Zehnder modulator 2 are biased in series and a static current is driven through both arms 4, leading to equal phase shifts, absorption and heating in both arms 4 of the Mach-Zehnder modulator 2. This ensures that the thermo-optic effects due to the bias current in both arms 4 are balanced to a large degree. The RF-signal is capacitively-coupled to the diodes out of phase via the even mode of a coplanar transmission line 8, as shown in FIG. 1A. Exploiting this design small signal modulators operating up to speeds of at least 24GHz seem feasible.

The electrical and thermal characteristics of the phase modulator sections are evaluated using the semiconductor device simulator MEDICI. Subsequently, the optical characteristics of the phase modulator sections, i.e. effective optical index and absorption changes, and the resulting Mach-Zehnder modulator 2 characteristics are determined from these computations by exporting the electrical and thermal characteristics and building proper averages over the optical mode profile that is calculated separately with the software tool FIMMWAVE. The carrier lifetime is dynamically adjusted including surface, Shockley-Read-Hall(SRH), and Auger recombination. The carrier lifetime in the intrinsic section can be varied over a wide range using doping or ion implantation. Simulations with three values for the electron/hole lifetimes have been performed: τ =10, 100, and 1000ps.

The contact resistivity is assumed to be small, about 10^{-7} Ωcm^2. Therefore, most of the voltage drop is located in the i-region of the pin-modulator. For short carrier

lifetimes, the electric field can be increased to a level where the current flow gets close to saturation and the carriers drift at the saturation velocity vs $=10^7$cm/s in silicon. The carriers injected into the i-region induce a change in refractive index and optical absorption. The effective index and absorption of the guided mode are obtained by averaging over the spatially varying index and absorption using the numerically determined optical mode profile of the split-ridge waveguide 12, see FIG. 1B.

Detailed two-dimensional simulations have been carried out for a device with dimensions: d_1 = 100nm, d_2 = 350nm, d_3 = 2μm, d_4 = 100 nm, h = 550 nm and w= 1μm assuming longitudinal homogeneity. The static I-V characteristics of the phase modulator section for the three different carrier lifetimes are shown in FIG. 2A together with the maximum temperature occurring in the device at different operating points. For voltages greater than 6V the current saturates. Acceptable internal operating temperatures between 300K and 400K are computed for this device at operating voltages of 2V and 4V. The heat is efficiently removed from the device via metal contacts and the thin slab-Si layer, as shown in FIG. 1B. For the case of a 10ps carrier lifetime, roughly 65% of the heat escapes over the metal contacts and 35% over the Si-slab. Thus the Si-slab layer does not only reduce the waveguide loss by better mode confinement in the rib but in addition greatly improves the heat sinking.

The AC characteristics of the device are determined by computing the small signal modulation transfer function between effective index change in the phase modulator section and the applied voltage. The modulation speed of a pin-diode depends critically on the carrier recombination time and drift velocity. The faster of the two processes, recombination or drift, determines the 3dB corner frequency of the AC-response.

For a structure with a carrier lifetime equal to or shorter than 1ns, and assuming a thermally grown oxide passivation with a surface recombination velocity of 100 cm/sec., SRH-recombination dominates the carrier lifetime. The SRH-lifetime depends on the density of recombination centers due to the doping or ion bombardment. At high carrier injection, the SRH recombination time is in the order of $\tau_{SHR} = 2\tau$, where τ itself depends on the carrier concentration. Correspondingly, the 3dB corner frequencies due to recombination are $f_{3dB}^{recom} = 1/2\pi\tau_{SHR} = 1/4\pi\tau$ = 8GHz, 0.8GHz, 0.08GHz for τ=10ps, 100ps, and 1ns, respectively.

In addition to recombination, carrier drift under the strong applied filed is also important for determination of the achievable modulating speed. The simulations gave

hole/electron velocities v ≈ 8×10^6cm/s, 2.4×10^6cm/s and 2.4×10^6 cm/s for τ=10ps, 100ps, and 1ns, which corresponds to $f_{3dB}^{drift} = 2.2/2\pi\tau_{drift} = 28$GHz, 3GHz, 2.6GHz with τ_{drift}= w/v. In summary, one can obtain the combined 3dB frequency $f_{3dB} = MAX(f_{3dB}^{recom}, f_{3dB}^{drift})$ = 28GHz, 3GHz, 2.6GHz, which matches the resulting corner frequencies from the simulations rather well, as shown in FIG. 2B: 24GHz, 2GHz, and 1GHz. FIG. 2B shows both, the effective index change due to thermal effects and due to the plasma dispersion effect. For frequencies f > 1GHz, the plasma effect is at least 10 times larger.

At low frequencies thermal effects dominate because the thermal time constant is about 30ns and, therefore, much longer than the carrier lifetimes used in the simulations. This is of major importance, because both effects do have opposite sign and therefore, there is a frequency range, 1-100 MHz, where the response is zero. If a modulator for a combined low and high frequency range is desired, this problem can be fixed by using two modulators with widely different carrier lifetimes in series, which address the low and high frequency ranges of the input signal separately. A similar modulator as in FIG. 1 with a carrier lifetime of 30 ns could be used to modulate the low frequency band from 0-100MHz.

To bias the modulator section one can dissipate a DC-power $P_{DC} = V_{DC} \cdot I_{DC}$, where the DC-current I_{DC} is the current density from FIG. 2A multiplied by the cross section of the device through the ridge. Operating at a bias voltage, $V_{DC} = 2V$, one can obtain for the DC-power of a 1mm long section according to FIG. 1B, with the area $A = 0.55\mu m \times 1mm = 5.5\times10^{-6} cm^2$, the DC power $P_{DC} = V \cdot I = 2V \cdot 4.545\times10^4 A/cm^2 \cdot 5.5\times10^{-6} cm^2 = 500mW$.

At this bias point and a modulation frequency f = 10GHz, with amplitude (half peak-to-peak) $V_{AC} = 1V$ the simulation gives for the amplitude of the AC current density $J_{AC} = 2.78\times10^4 A/cm^2$, resulting in a dissipated microwave power of $P_{AC} = 1/2 V_{AC} I_{AC} \cos\varphi = 1/2 \cdot 1V \cdot 2.78\times10^4 A/cm^2 \cdot 5.5\times10^{-6} cm \quad \cos 18^o = 76mW$. The corresponding amplitude of the effective index change is Δn=-1.5254×10^{-4}.

To achieve a phase shift of π at a wavelength of 1.55 μm a 5 mm long section would be necessary, resulting in a figure of merit, FOM=0.5V·cm, of the phase modulator section. Note, for a MZ-modulator a differential phase shift of π is necessary between the two arms to achieve full on off modulation which is possible for a 1 V amplitude signal and 2.5 mm long phase modulator sections in each arm resulting in a

total DC-Power consumption of 2.5W and an estimated microwave power of 380 mW. The loss due to injected carriers can easily be taken into account and are in general small, only about half of the loss due to the doped contact regions. Both the losses and the phase shift depend approximately linearly on the injected carriers and, therefore, one can obtain for the relationship of total losses accumulated in the structure versus phase shift $\alpha \cdot L \approx \phi/4$, which leads after a short analysis to the following transmission characteristic of the modulator:

$$T(\phi) = \frac{1}{2} \cdot \exp[-(\alpha_C + \alpha_{DC})L]\left[\cosh(\phi/4) - \cos(2\phi)\right] \quad \text{Eq. 1}$$

for $|\phi| < \pi/2$. For the current example of a 2.5 mm long structure the total static losses due to contact doping and the DC-bias current would be about

$$10\log_{10}[Exp((\alpha_C + \alpha_{DC})L)] = 4dB \quad \text{Eq. 2}$$

not including possible bend and scattering losses due to sidewall roughness.

For the purpose of analog sampling and electrical to optical information transfer in general an important key-characteristic of a modulator is its linearity. For the proposed MZ-modulator this problem translates into the nonlinearity of the MZ-transmission as function of the induced phase shift and the linearity of the generated phase shift as a function of the input voltage. The linearity of the pin-structure in FIG. 1B is displayed in FIG. 3A. For input voltage amplitudes V_{ac} 0.1V, the difference between fundamental and 2nd harmonic is larger than 60dB and negligible 3rd harmonic is generated up to voltage amplitudes V_{ac} 0.8V. The transfer characteristic of the MZ-structure is given by

$$T(\Delta n) = 1 - \sin^2\left(\frac{2\pi L}{\lambda}\Delta n + \varphi_0\right) \quad \text{Eq. 3}$$

where φ_0 can be biased thermally to $\pi/4$ at an inflection point to eliminate 2nd harmonic. Therefore, the 3rd harmonic governs the non-linearity of the modulator. FIG. 3B shows the fundamental and 3rd order harmonic output of MZ-modulator in terms of its transmission: 10log(T) in dB. FIGs. 3A-3B show that the nonlinearity is limited by the MZ-Transmission, which can in principle be eliminated by using both outputs of the MZ-modulator.

In summary, a high-speed electronic carrier-injection modulator has been proposed and investigated based on a high-index-contrast Si-waveguides. In one embodiment a split-rib waveguide was used. Operation in the saturation region, i.e. the pin junctions are always biased in forward direction, with a carrier saturation velocity

$v_s = 10^7$cm/s and short carrier lifetime τ=10ps by lifetime doping or ion bombardment, this modulator can be driven in the range of 1-30GHz. In that range the plasma effect overwhelms the thermal effect about 10-fold.

Although the present invention has been shown and described with respect to several preferred embodiments thereof, various changes, omissions and additions to the form and detail thereof, may be made therein, without departing from the spirit and scope of the invention.

What is claimed is:

CLAIMS

1. An opto-electronic modulator:

a Mach-Zehnder structure that comprises p^+in^+-diodes in both arms of the Mach-Zehnder structure, said Mach-Zehnder structure is formed by waveguides so as to confine an optical mode in the opto-electronic modulator.

2. The opto-electronic modulator of claim 1, wherein said waveguide structure is electrically driven.

3. The opto-electronic modulator of claim 1, wherein said waveguide structure comprises a rib-waveguide.

4. The opto-electronic modulator of claim 1, wherein said waveguides comprise a buried-waveguide.

5. The opto-electronic modulator of claim 1 further comprising a SiO_2-isolating layer, which splits the rib-waveguide from said Mach-Zehnder structure.

6. The opto-electronic modulator of claim 1, wherein said p^+in^+-diodes are biased in series and a static current is driven through both arms.

7. The opto-electronic modulator of claim 1, wherein said p^+in^+-diodes capacitively-couple a RF-signal 6.

8. The opto-electronic modulator of claim 1 further comprising at least one contact region having doping levels as high as $n_D = 10^{19}cm^{-3}$.

9. The opto-electronic modulator of claim 8, wherein said at least one contact region comprises a contact resistivity of approximately $10^{-7}\ \Omega cm^2$.

10. A method of forming an opto-electronic modulator:

forming a Mach-Zehnder by waveguides so as to confine an optical mode in the opto-electronic modulator; and

forward biasing p^+in^+-diodes in both arms of the Mach-Zehnder structure.

11. The method of claim of 10, wherein said waveguide structure is electrically driven.

12. The method of claim of 10, wherein said waveguide structure comprises a rib-waveguide.

13. The method of claim of 10, wherein said waveguides comprise a buried-waveguide.

14. The method of claim of 10 further comprising forming a SiO_2-isolating layer, which splits the rib-waveguide from said Mach-Zehnder structure.

15. The method of claim of 10, wherein said p^+in^+-diodes are biased in series and a static current is driven through both arms.

16. The method of claim of 10, wherein said p^+in^+-diodes capacitively-couple a RF-signal 6.

17. The method of claim of 10 further comprising forming at least one contact region having doping levels as high as $n_D = 10^{19}cm^{-3}$.

18. The method of claim of 17, wherein said at least one contact region comprises a contact resistivity of approximately 10^{-7} Ωcm^2.

19. An opto-electronic modulator comprising:

a Mach-Zehnder structure that comprises p^+ and n^+ doped regions in both arms of the Mach-Zehnder structure, said Mach-Zehnder structure is formed by waveguides so as to confine an optical mode in the opto-electronic modulator.

20. The opto-electronic modulator of claim 19, wherein said waveguide structure is electrically driven.

21. The opto-electronic modulator of claim 19, wherein said p^+ and n^+ doped regions are biased in series and a static current is driven through both arms.

22. The opto-electronic modulator of claim 19, wherein said p^+ and n^+ doped regions capacitively-couple a RF-signal 6.

23. The opto-electronic modulator of claim 19 further comprising at least one contact region having doping levels as high as $n_D = 10^{19}cm^{-3}$.

24. The opto-electronic modulator of claim 23, wherein said at least one contact region comprises a contact resistivity of approximately 10^{-7} Ωcm^2.

FIG. 1A

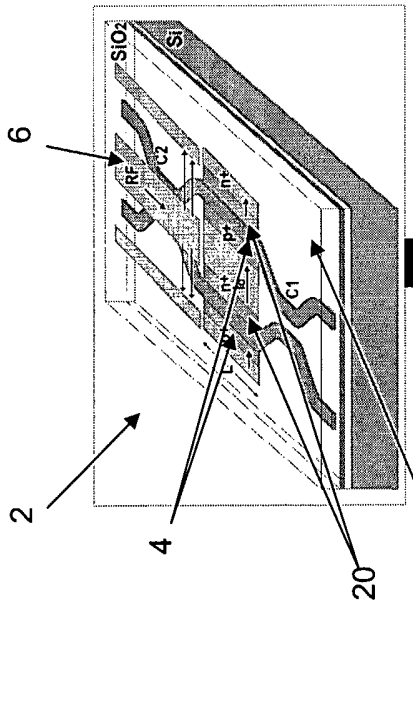

FIG. 1B

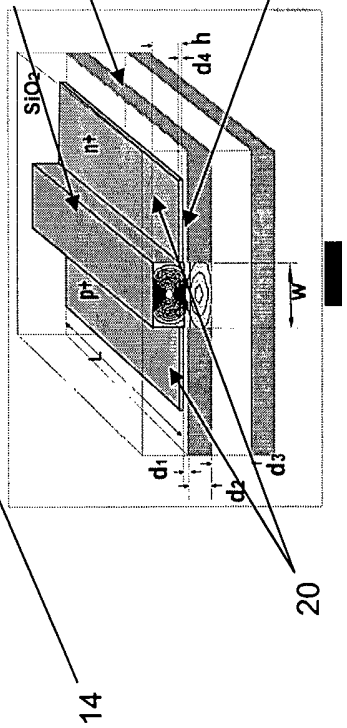

FIG. 2B

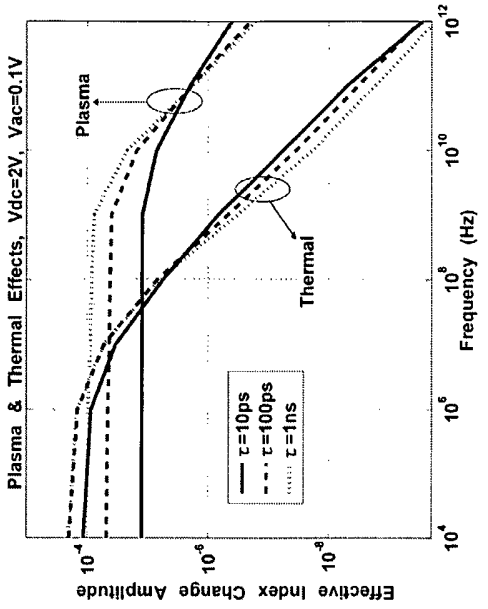
Plasma & Thermal Effects, Vdc=2V, Vac=0.1V
Plasma
Thermal
τ=10ps
τ=100ps
τ=1ns
Effective Index Change Amplitude
Frequency (Hz)

FIG. 2A

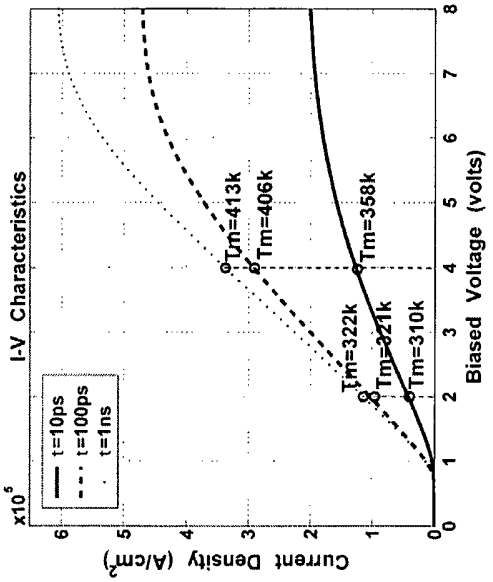
I-V Characteristics
t=10ps
t=100ps
t=1ns
Tm=413k
Tm=406k
Tm=358k
Tm=322k
Tm=321k
Tm=310k
Current Density (A/cm²)
Biased Voltage (volts)

FIG. 3B

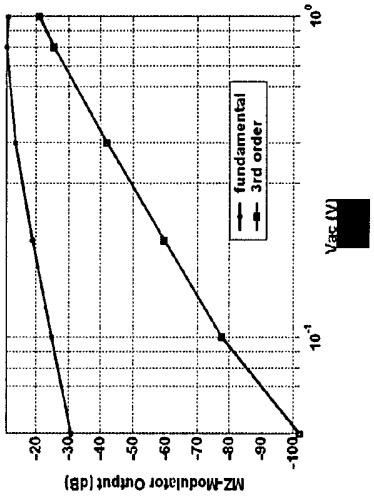
MZ-Modulator Output (dB)
-20
-30
-40
-50
-60
-70
-80
-90
-100
fundamental
3rd order
10^{0}
10^{-1}
Vac (V)

FIG. 3A

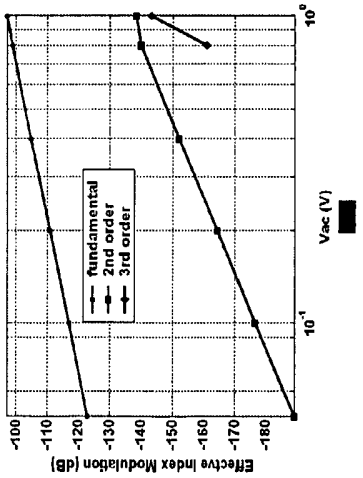
Effective Index Modulation (dB)
-100
-110
-120
-130
-140
-150
-160
-170
-180
fundamental
2nd order
3rd order
10^{0}
10^{-1}
Vac (V)

INTERNATIONAL SEARCH REPORT

PCT/US2005/015339

A. CLASSIFICATION OF SUBJECT MATTER
IPC 7 G02F1/025 G02F1/225

According to International Patent Classification (IPC) or to both national classification and IPC

B. FIELDS SEARCHED

Minimum documentation searched (classification system followed by classification symbols)
IPC 7 G02F

Documentation searched other than minimum documentation to the extent that such documents are included in the fields searched

Electronic data base consulted during the international search (name of data base and, where practical, search terms used)
EPO-Internal, INSPEC

C. DOCUMENTS CONSIDERED TO BE RELEVANT

Category °	Citation of document, with indication, where appropriate, of the relevant passages	Relevant to claim No.
X	BOUSSEY J ET AL: "Optoelectronic integration in silicon-on-insulator technologies" SEMICONDUCTOR CONFERENCE, 1998. CAS '98 PROCEEDINGS. 1998 INTERNATIONAL SINAIA, ROMANIA 6-10 OCT. 1998, NEW YORK, NY, USA,IEEE, US, vol. 2, 6 October 1998 (1998-10-06), pages 407-415, XP010313921 ISBN: 0-7803-4432-4 the whole document ----- -/--	1-24

[X] Further documents are listed in the continuation of box C.

[X] Patent family members are listed in annex.

° Special categories of cited documents :

"A" document defining the general state of the art which is not considered to be of particular relevance

"E" earlier document but published on or after the international filing date

"L" document which may throw doubts on priority claim(s) or which is cited to establish the publication date of another citation or other special reason (as specified)

"O" document referring to an oral disclosure, use, exhibition or other means

"P" document published prior to the international filing date but later than the priority date claimed

"T" later document published after the international filing date or priority date and not in conflict with the application but cited to understand the principle or theory underlying the invention

"X" document of particular relevance; the claimed invention cannot be considered novel or cannot be considered to involve an inventive step when the document is taken alone

"Y" document of particular relevance; the claimed invention cannot be considered to involve an inventive step when the document is combined with one or more other such documents, such combination being obvious to a person skilled in the art.

"&" document member of the same patent family

Date of the actual completion of the international search	Date of mailing of the international search report
21 July 2005	01/08/2005

Name and mailing address of the ISA	Authorized officer
European Patent Office, P.B. 5818 Patentlaan 2 NL - 2280 HV Rijswijk Tel. (+31-70) 340-2040, Tx. 31 651 epo nl, Fax: (+31-70) 340-3016	Boubal, F

INTERNATIONAL SEARCH REPORT

PCT/US2005/015339

C.(Continuation) DOCUMENTS CONSIDERED TO BE RELEVANT

Category °	Citation of document, with indication, where appropriate, of the relevant passages	Relevant to claim No.
X	FISCHER U ET AL: "OPTICAL WAVEGUIDE SWITCHES IN SILICON BASED ON GE-INDIFFUSED WAVEGUIDES" IEEE PHOTONICS TECHNOLOGY LETTERS, IEEE INC. NEW YORK, US, vol. 6, no. 8, 1 August 1994 (1994-08-01), pages 978-980, XP000465499 ISSN: 1041-1135 the whole document	1-4, 6-13, 15-24
A	BARRIOS C A ET AL: "Electrooptic modulation of silicon-on-insulator submicrometer-size waveguide devices" JOURNAL OF LIGHTWAVE TECHNOLOGY IEEE USA, vol. 21, no. 10, October 2003 (2003-10), pages 2332-2339, XP002337201 ISSN: 0733-8724 the whole document	1,8-10, 17-19, 23,24
X	DAINESI P ET AL: "CMOS COMPATIBLE FULLY INTEGRATED MACH-ZEHNDER INTERFEROMETER IN SOITECHNOLOGY" IEEE PHOTONICS TECHNOLOGY LETTERS, IEEE INC. NEW YORK, US, vol. 12, no. 6, June 2000 (2000-06), pages 660-662, XP000951833 ISSN: 1041-1135 the whole document	1-24
X	SAMARA-RUBIO D ET AL: "A gigahertz silicon-on-insulator Mach-Zehnder modulator" OPTICAL FIBER COMMUNICATION CONFERENCE, 2004. OFC 2004 LOS ANGELES, CA, USA FEB. 23-25, 2004, PISCATAWAY, NJ, USA,IEEE, 26 February 2004 (2004-02-26), pages 701-703, XP010745963 ISBN: 1-55752-772-5 the whole document	1-24
A	US 2003/003736 A1 (DELWALA SHRENIK) 2 January 2003 (2003-01-02) paragraph '0015! paragraph '0019! paragraph '0091! paragraph '0097! - paragraph '0099! paragraph '0159! - paragraph '0161! figures 6B,6C,20-23	1-24

INTERNATIONAL SEARCH REPORT

Information on patent family members

PCT/US2005/015339

Patent document cited in search report	Publication date	Patent family member(s)	Publication date
US 2003003736 A1	02-01-2003	US 2003039430 A1	27-02-2003
		US 2003026513 A1	06-02-2003
		CA 2449707 A1	21-11-2002
		CA 2450383 A1	21-11-2002
		EP 1402564 A2	31-03-2004
		EP 1402294 A1	31-03-2004
		WO 02093203 A2	21-11-2002
		WO 02093218 A1	21-11-2002
		US 2003039439 A1	27-02-2003
		US 2003054639 A1	20-03-2003
		US 2003013304 A1	16-01-2003
		US 2003036265 A1	20-02-2003
		US 2003118306 A1	26-06-2003
		US 2003036266 A1	20-02-2003
		US 2003040134 A1	27-02-2003
		US 2003040175 A1	27-02-2003
		US 2002172464 A1	21-11-2002
		US 2003059152 A1	27-03-2003
		US 2003003734 A1	02-01-2003
		US 2003003735 A1	02-01-2003
		US 2003003737 A1	02-01-2003
		US 2003003738 A1	02-01-2003
		US 2004129949 A1	08-07-2004
		US 2004258348 A1	23-12-2004
		CA 2449106 A1	21-11-2002
		CA 2449860 A1	21-11-2002
		EP 1402298 A2	31-03-2004
		EP 1402289 A1	31-03-2004
		WO 02093204 A2	21-11-2002
		WO 02093211 A1	21-11-2002
		US 2003032286 A1	13-02-2003