(19) Europäisches Patentamt
European Patent Office
Office européen des brevets

(11) EP 0 634 224 B1

(12) **EUROPEAN PATENT SPECIFICATION**

(45) Date of publication and mention of the grant of the patent:
02.01.1997 Bulletin 1997/01

(51) Int. Cl.[6]: **B05B 7/12**, F16K 1/36, F16K 41/00

(21) Application number: **94111252.6**

(22) Date of filing: **17.07.1991**

(54) **Shaft seal for portable paint gun**

Schaftdichtung für tragbare Farbspritzpistole

Bague d'étanchéité pour pistolet de peinture portable

(84) Designated Contracting States:
CH DE DK FR GB IT LI NL

(30) Priority: **20.07.1990 US 553432**
03.08.1990 US 560744

(43) Date of publication of application:
18.01.1995 Bulletin 1995/03

(62) Application number of the earlier application in accordance with Art. 76 EPC: **91111954.3**

(73) Proprietor: **WAGNER SPRAY TECH CORPORATION**
Minneapolis Minnesota 55447 (US)

(72) Inventors:
- **Svendsen, John M.**
  Corcoran, Minnesota 55340 (US)
- **Steinberg, Timothy D.**
  Coon Rapids, Minnesota 55433 (US)
- **Gunderson, Richard W.**
  Elk River, Minnesota 55330 (US)

(74) Representative: **Liesegang, Roland, Dr.-Ing.**
FORRESTER & BOEHMERT
Franz-Joseph-Strasse 38
80801 München (DE)

(56) References cited:
WO-A-91/11644
GB-A- 799 991
US-A- 4 560 109

Note: Within nine months from the publication of the mention of the grant of the European patent, any person may give notice to the European Patent Office of opposition to the European patent granted. Notice of opposition shall be filed in a written reasoned statement. It shall not be deemed to have been filed until the opposition fee has been paid. (Art. 99(1) European Patent Convention).

Printed by Rank Xerox (UK) Business Services
2.13.11/3.4

EP 0 634 224 B1

Description

This invention pertains to the field of portable painting equipment (see document US-A-4 560 109), more particularly to portable paint guns referred to as high volume low pressure or HVLP type paint guns. In the past, such guns have been characterized by relatively complex and costly sealing mechanisms to prevent the escape of pressurized air from the interior of such guns. The present invention provides an improved apparatus for preventing the escape of pressurized air in a simple and efficient structure.

Figure 1 is a right side elevation view of a portable paint gun with parts cut away and with movable parts shown in an OFF position.

Figure 2 is an enlarged side elevation detail of the shaft seal of the present invention.

Figure 3 is an enlarged side elevation detail of an air valve for the gun.

Figure 4 is a fragmentary right side elevation view as seen in Figure 1 with movable parts in an intermediate position.

Figure 5 is a fragmentary right side elevation view with movable parts in an ON position.

Referring now to the drawings and more particularly to Figure 1, a portable paint gun 10 may be seen. Gun 10 has a handle 12 which is preferably hollow, and through which compressed air can pass when connected to a source of compressed air via fitting 14. Gun 10 further has a paint cup 16 having a siphon tube 18 to draw paint out of paint cup 16 in operation. Gun 10 further has a trigger 20 pivotably mounted to a gun body 22 via a trigger pin 24.

Gun 10 further has an air cap 26 retained by a locking ring 28 on body 22. An air cap spring 30 is preferably secured to a detent plate 32, as for example, by spot welding. Detent plate 32 preferably has projections 34, 36 which are retained respectively in slots 38, 40 to prevent rotation of plate 32. Plate 32 preferably has a cruciform opening interdigitated with projections on plate 32 (not shown) which are received in mating recesses (not shown) in air cap 26. The detents in plate 32 and recesses in cap 26 cooperate to hold cap 26 in one of three predetermined positions to provide for control of the paint pattern in a manner well known. Gun 10 further has a fluid nozzle 42 which cooperates with a needle 44 to form a needle or paint valve 46 to control the flow of paint or other material delivered by gun 10. A needle packing nut 48 is preferably threaded into body 22 to compress needle packing 50 against needle 44.

Gun 10 also has an air passageway 52 in communication with a plenum 54 surrounding fluid nozzle 42. Plenum 54 is in communication with recess 56 in air cap 26. Trigger 20 is in contact with an air valve shaft 58 surrounding needle 44 and carrying an air valve 60. An air plug 62 is preferably threaded into body 22 to close off an alternative inlet to passageway 52. In the configuration shown in Figure 1, gun 10 is arranged for "non-bleeder" operation. By interchanging plug 62 with fitting 14, and supplying air directly to passageway 52, gun 10 would be configured for "bleeder" operation.

Valve 60 is retained on shaft 58 by a retaining ring 64 on one side of valve 60 and by a flange 66 on the other side of valve 60. Valve 60 is urged toward a mating seat 68 by an air valve spring 70. Air valve spring 70 is also in contact with a shaft seal 72. Shaft seal 72 seals shaft 58 against a material adjustment housing 74 threaded into gun body 22. A needle spring 76 is retained by a material adjustment knob 78 threaded on housing 74 and spring 76 urges needle 44 forward against nozzle 42 to maintain needle valve 46 in a closed position.

A bushing 79 preferably formed of plastic serves as a guide and air seal around shaft 58 and holds shaft 58 and needle 44 in alignment during assembly and operation of gun 10. It is to be understood that bushing 79 need not be an "air-tight" seal since it only needs to prevent air leakage along shaft 58 when valve 60 is in the intermediate and ON positions.

Referring now more particularly to Figure 2, various details of the shaft seal 72 may be seen. Seal 72 has a mediate portion 80 having a radially outwardly projecting flange 82 and a generally cylindrical interior recess 84 located radially inwardly of the flange 82. Seal 72 further has a first conical rim 86 extending axially in a first direction away from flange 82 with a shallow conical taper from a relatively thicker cross-section 88 proximal of the flange 82 to a relatively thinner cross-section 90 distal of flange 82. Shaft seal 72 further has a first extension 92 of the generally cylindrical interior recess 84 with extension 92 located radially inwardly of surface 86.

Seal 72 further has a second conical rim 94 extending axially in a second direction opposite the first direction away from flange 82 and further has a second extension 96 of the generally cylindrical interior recess 84 extending axially along and radially inward of rim 94.

Rim 94 of seal 72 has a conical inner surface 98 extending from the second extension 96 of the generally cylindrical interior recess 84 to a cylindrical shaft sealing surface 100 which is located axially distal of the flange 82 in the second direction. Rim 94 also has a tapered sealing surface 102 having an external conical taper adapted for contacting and interfitting with a mating correspondingly tapered bore or chamfer 104 in element 74 of paint gun 10 such that shaft seal 72 prevents the passage of air between the control shaft 58 and the shaft sealing surface 100 and also from between the sealing surface 102 and the tapered bore 104 when pressurized air is present in chamber 106.

It is to be understood that first conical rim 86 is sized to mate in an interference fit with cylindrical compression spring 70 to retain seal 72 on spring 70 when gun 10 is disassembled. It is further to be understood that spring 70 acts against flange 82 to urge seal 72 in the second direction with respect to the control shaft 58. In a preferred embodiment, the first conical rim 86 tapers from 0.228 inches diameter to 0.311 inches

diameter and the spring 70 has an internal diameter of 0.316 inches.

It is further to be noted that the tapered sealing surface 102 of conical rim 94 preferably has a taper substantially equal to a taper of the conical inner surface 98 providing a constant cross-sectional thickness of rim 94 between surfaces 98 and 102. It is further to be understood that the cylindrical interior recess 84, along with its extensions 92, 96 preferably has a diameter substantially greater than the diameter of the control shaft around which the seal 72 is located such that there is a radial clearance between shaft 58 and recess 84, together with its extensions 92, 96. Furthermore, the shaft sealing surface 100 preferably has an axial length that is relatively short with respect to the axial length of the overall shaft seal 72 (e.g. less than ten percent) such that the resistance to relative axial movement between the control shaft 58 and the seal 72 is minimized.

In a preferred embodiment, surface 100 is 0.025 inches long while seal 72 is 0.365 inches long overall. Surfaces 98, 102 and 104 each preferably have a conical taper of 30 degrees.

In operation, pressure from spring 70 forces seal 72 against the tapered bore or chamfer 104 in the material adjustment housing 74 creating an airtight seal. Axial force or pressure generated by spring 70 is transferred to a radial force by the interaction of surfaces 102, 104 thus urging surface 100 against shaft 58 (making use of the conical flexibility of rim 94), forming an airtight seal. As seal 72 wears at surface 100, seal 72 is permitted to move axially in the second direction as urged by spring 70 to maintain sufficient pressure to insure sealing between shaft 58, seal 72 and housing 74.

Referring now more particularly to Figure 3, various details of the air valve 60 may be seen. Valve 60 has a generally cylindrical axially extending hub portion 110 having a through bore 112, a radially outwardly projecting support portion 114 mounted on the hub portion 110, and a generally conical outer rim portion 116 extending coaxially with hub portion 110 and mounted on support portion 114 radially outwardly of hub portion 110. Rim portion 116 has a tapered sealing surface 118 adapted for matingly interfitting with a tapered valve seating surface 120 in the body 22 of gun 10. Valve 60 further has an axial recess 122 located in a region radially inward of the tapered sealing surface of rim portion 116. The hub portion 110 of valve 60 has a first shoulder 124 and a second shoulder 126 for locating the valve in first and second axial directions on shaft 58. Shoulder 124 is held by retaining ring 64 and shoulder 126 is held by flange 66 on shaft 58.

Both seal 72 and valve 60 are preferably formed of a relatively resilient material such as virgin polytetrafluorethylene as sold under the trademark TEFLON by El Dupont de Nemours Co. The material of valve 60 is preferably homogeneous with the rim portion 116 being relatively flexible with respect to the hub and support portions 110, 114 such that sealing surface 118 conforms to the seating surface 120 when valve 60 is drawn against the seating surface 120. Surface 118 preferably has an external conical angle 128 of 16 degrees, while seating surface 120 preferably has an internal conical angle 130 of 18 degrees.

Rim portion 116 provides a "forgiving" alignment between seal 60 and seating surface 120. The flexibility of rim portion 116 allows the tapered sealing surface 118 to conform to radial and axial misalignment between seal 60 and gun body 22. Because angle 130 is greater than angle 128, a leading edge 132 of the sealing surface 118 will contact surface 120 first. It has been found preferable that hub portion 110 and support portion 114 are relatively rigid with respect to rim portion 116 which is relatively conically flexible and provides a secondary seal area along surface 118 distal of leading edge 132, thus compensating for creep or cold flow of lip portion 116 during the operating lifetime of gun 10. The rigidity of support portion 114 also provides a radial clearance protection of rim portion 116 to reduce the possibility of damage during storage and handling of valve 60 prior to assembly into gun 10.

Referring now to Figures 4 and 5, along with Figure 1, the operation of the air valve and seal is as follows:

In Figure 1, the gun is shown in an OFF position with both the paint or needle valve 46 and air valve 60 in a closed position. Paint valve 46 is closed when needle 44 is its forwardmost position and is contacting the interior of fluid nozzle 42. Air valve 60 is in the closed position when control shaft 58 is in the forwardmost or closed position. With the gun configured for "non-bleeder" operation, retracting trigger 20 from the OFF or closed position shown in Figure 1 to an intermediate position as shown in Figure 4, will move control shaft 58, but not needle 44, thus opening passageway 52 to the source of pressurized air by moving air valve 60 away from seating surface 120 permitting the passage of air therethrough. Further progression of trigger 20 from the position shown at Figure 4 to the position shown in Figure 5 will move the control shaft 58 axially within seal 72 further in the second direction causing the control shaft to drive needle 44 against spring 76 opening the needle valve 46.

Thus, it may be seen that in Figure 1, both the paint valve 46 and the air valve 60 are in the OFF position. In Figure 4, the air valve 60 is in the ON position while the paint valve 46 remains in the OFF position. In Figure 5, both the paint valve 46 and the air valve 60 are in the ON position.

It is to be understood that as trigger 20 is released, the paint valve 46 will move to the OFF position as shown in Figure 4, while the air valve 60 will remain ON, thus clearing paint from air cap 26 and the exterior of fluid nozzle 42. Further release of trigger 20 will permit movement of control shaft 58 to the closed position for air valve 60 such that the sealing surface 118 conforms

to the seating surface 120 when the control shaft is in the closed position of Figure 1. It can thus be seen that the mating, sealing and seating surfaces 118, 120 are in contact with each other when the control shaft 58 is in a closed position and the sealing and seating surfaces 118, 120 are axially spaced from each other when the control shaft 58 is displaced axially away from the closed position. It is to be understood that seal 72 maintains an air seal between itself and control shaft 58 in each of the positions shown in Figures 1, 4 and 5 and while shaft 58 is moving among those positions.

Claims

1. Shaft seal in a portable paint gun of the type having a control shaft (58) for controlling a supply of pressurized air to atomize a selectively provided stream of paint, the shaft seal (72) comprising:

   a) a mediate portion (80) having a radially outwardly projecting flange (82) and a generally cylindrical interior recess (84) located radially inwardly of the flange (82);
   b) a first conical rim (86) extending axially in a first direction away from the flange (82) and having a shallow taper from a relatively thikker cross section proximal of the flange (82) to a relatively thinner cross section (90) distal of the flange (82) and having a first extension of the generally cylindrical interior recess (84) radially inwardly of the first conical rim (86);
   c) a cylindrical portion extending axially in a second direction opposite the first direction away from the flange (82) and having a second extension (96) of the generally cylindrical interior recess (84) extending axially along and radially inwardly of the cylindrical portion;
   d) a second conical rim (94) extending axially in the second direction from the cylindrical portion; and
   e) a conical inner surface (98) extending from the second extension of the generally cylindrical interior recess (84) to a cylindrical shaft sealing surface (100) located axially distal of the flange (82) in the second direction wherein the second conical rim (94) has a tapered sealing surface (102) adapted for interfitting and being in contact with a mating correspondingly tapered bore (104) in an element (74) of the paint gun such that the shaft seal (72) prevents the passage of air between the control shaft (58) and the shaft sealing surface (100) and between the sealing surface (102) and thetapered bore (104).

2. The shaft seal of claim 1 wherein the first conical rim (86) is adapted to mate in an interference fit with a generally cylindrical compression spring (70) acting axially against the flange (82) to urge the seal in the second direction with respect to the control shaft (58).

3. The shaft seal of claim 2 wherein the first conical rim has a conical taper of about ten degrees.

4. The shaft seal of claim 2 or 3 wherein the first conical rim (86) tapers from about 5.79 mm (0.228 inches) diameter to about 7.90 mm (0.311 inches) diameter and the spring has an internal diameter of about 8.03 mm (0.316 inches).

5. The shaft seal of any of claims 1 to 4 wherein the tapered sealing surface (102) of the second conical rim (94) has a taper substantially equal to a taper of the conical inner surface.

6. The shaft seal of any of claims 1 to 5 wherein the cylindrical interior recess has a diameter substantially greater than a diameter of the control shaft around which the seal is located such that there is a radial clearance between the shaft and the cylindrical interior recess and further wherein the shaft sealing surface has an axial length that is relatively short with respect to an axial lenght of the overall shaft seal such that the resistance to relative axial movement between the shaft and the seal is minimized.

7. The shaft seal of any of claims 1 to 6 wherein the shaft seal is formed of resilient material.

8. The shaft seal of claim 7 wherein the shaft seal is formed of polytetrafluorethylene.

9. The shaft seal of any of claims 1 to 8 wherein the tapered sealing surface has a conical taper of about thirty degrees.

10. The shaft seal of claim 9 wherein the conical inner surface has an internal conical taper which is substantially equal to the taper of the conical sealing surface and, particularly, is about thirty degrees.

11. The shaft seal of claim 10 wherein the internal conical taper is about thirty degrees.

Patentansprüche

1. Radialdichtung in einer tragbaren Farbspritzpistole der Bauart mit einer Steuerstange (58) zum Steuern einer Druckluftversorgung, um einen selektiv zugeführten Farbstrom zu zerstäuben, mit folgenden Merkmalen der Radialdichtung:

   a) einem Mittelteil (80) mit einem radial nach außen vorstehenden Flansch (82) und einer im wesentlichen zylindrischen inneren Ausnehmung (84), die radial innerhalb des Flansches

(82) liegt,

b) einem ersten konischen Rand (86), der sich axial in eine erste Richtung von dem Flansch (82) wegerstreckt und eine flache Neigung von einem im Verhältnis dickeren Querschnitt in der Nähe des Flansches (82) zu einem im Verhältnis dünneren Querschnitt (90) entfernt von dem Flansch (82) aufweist, und mit einer ersten Verlängerung der im wesentlichen zylindrischen inneren Ausnehmung (84) radial innerhalb des ersten konischen Randes (86);

c) einem Zylinderabschnitt, der sich axial in eine zweite Richtung, die zu der ersten Richtung entgegengesetzt ist, von dem Flansch (82) wegerstreckt, mit einer zweiten Verlängerung (86) der im wesentlichen zylindrischen inneren Ausnehmung (84), welche sich axial längs und radial innerhalb des Zylinderabschnitts erstreckt;

d) einem zweiten konischen Rand (94), der den Zylinderabschnitt axial in der zweiten Richtung verlängert; und

e) einer konischen Innenfläche (98), die sich von der zweiten Verlängerung der im wesentlichen zylindrischen inneren Ausnehmung (84) zu einer zylindrischen Radialdichtungsfläche (100) erstreckt, welche in der zweiten Richtung axial entfernt von dem Flansch (82) angeordnet ist, wobei der zweite konische Rand (94) eine abgeschrägte Dichtfläche (102) hat, welche mit einer entsprechend abgeschrägten Gegenbohrung (104) in einem Element (74) der Farbspritzpistole zusammenpaßt und in Kontakt bringbar ist, so daß die Radialdichtung (72) den Durchtritt von Luft zwischen der Steuerstange (58) und der Radialdichtungsfläche (100) und zwischen der Dichtungsfläche (102) und der abgeschrägten Bohrung (104) verhindert.

2. Radialdichtung nach Anspruch 1, bei welcher der erste konische Rand (86) mit einer im wesentlichen zylindrischen Druckfeder (70), welche axial auf den Flansch (82) einwirkt, im Preßsitz zusammenpaßbar ist, um die Dichtung relativ zu der Steuerstange (58) in die zweite Richtung zu drücken.

3. Radialdichtung nach Anspruch 2, bei welcher der erste konische Ring eine konische Abschrägung von etwa 10 Grad hat.

4. Radialdichtung nach Anspruch 2 oder 3, bei welcher der erste konische Rand (86) sich von einem Durchmesser von etwa 5,79 mm (0,228 Inch) zu einem Durchmesser von etwa 7,90 mm (0,311 Inch) erweitert und die Feder einen Innendurchmesser von etwa 8,03 mm (0,316 Inch) hat.

5. Radialdichtung nach einem der Ansprüche 1 bis 4, bei der die abgeschrägte Dichtungsfläche (102) des zweiten konischen Randes (94) eine Neigung hat, die im wesentlichen gleich einer Neigung der konischen Innenfläche ist.

6. Radialdichtung nach einem der Ansprüche 1 bis 5, bei der die zylindrische innere Ausnehmung einen Durchmesser hat, der wesentlich größer ist als ein Druchmesser der Steuerstange, um welche herum die Dichtung angeordnet ist, so daß es einen radialen Freiraum zwischen der Stange und der zylindrischen inneren Ausnehmung gibt, und bei der ferner die Radialdichtungsoberfläche eine axiale Länge hat, die im Verhältnis zu einer axialen Länge der gesamten Radialdichtung relativ kurz ist, so daß der Widerstand gegen eine relative axiale Bewegung zwischen der Stange und der Dichtung minimiert wird.

7. Radialdichtung nach einem der Ansprüche 1 bis 6, bei der die Radialdichtung aus einem plastischen Werkstoff hergestellt ist.

8. Radialdichtung nach Anspruch 7, bei der die Radialdichtung aus Polytetrafluorethylen hergestellt ist.

9. Radialdichtung nach einem der Ansprüche 1 bis 8, bei der die abgeschrägte Dichtungsfläche eine konische Neigung von etwa 30 Grad hat.

10. Radialdichtung nach Anspruch 9, bei der die konische Innenfläche eine innere konische Neigung hat, die im wesentlichen gleich der Neigung der konischen Dichtungsfläche, und insbesondere etwa 30 Grad, ist.

11. Radialdichtung nach Anspruch 10, bei der die innere konische Neigung etwa 30 Grad beträgt.

Revendications

1. Joint d'étanchéité pour tige, dans un pistolet de peinture portable, du type ayant une tige de commande (58) prévue pour commander l'alimentation en air comprimé afin d'atomiser un courant fourni de façon sélective, de peinture, l'étanchéité pour tige (72) comprenant:

a) une partie médiane (80) ayant une bride (82) faisant saillie radialement vers l'extérieur et une cavité intérieure (84) globalement cylindrique située radialement à l'intérieur de la bride (82);

b) une première nervure conique (86) s'étendant axialement dans une première direction s'écartant de la bride (82) et ayant une légère conicité en partant d'une section transversale relativement plus épaisse, située en position proximale de la bride (82), et en allant en une

section transversale relativement plus mince (90), située en une position distale vis-à-vis de la bride (82), et ayant une première extension de la cavité intérieure (84) globalement cylindrique, s'étendant radialement à l'intérieur de la première nervure conique (86);

c) une partie cylindrique s'étendant axialement dans une deuxième direction opposée à la première direction en s'écartant de la bride (82) et ayant une deuxième extension (96) de la cavité intérieure (84) globalement cylindrique, s'étendant axialement et radialement vers l'intérieur de la partie cylindrique;

d) une deuxième nervure conique (94) s'étendant axialement dans la deuxième direction depuis la partie cylindrique; et

e) une surface intérieure (98) conique s'étendant, depuis la deuxième extension de la cavité intérieure (84) globalement cylindrique, vers une surface d'étanchéité (100) pour une tige cylindrique, placée axialement à distance de la bride (82), dans la deuxième direction, dans lequel la deuxième nervure conique (94) a une surface d'étanchéité (102) effilée, adaptée pour s'interposer et venir en contact avec un perçage (104) doté d'une conicité correspondante d'adaptation, ménagé dans un élément (74) du pistolet à peinture, de manière que le joint d'étanchéité pour tige (72) empêche tout passage d'air entre la tige de commande (58) et la surface d'étanchéité (100) destinée à la tige et entre la surface d'étanchéité (102) et le perçage conique (104).

2. Le joint d'étanchéité pour tige selon la revendication 1, dans lequel la première nervure conique (86) est adaptée pour s'adapter, avec interférence, avec un ressort de compression (70) globalement cylindrique, agissant axialement contre la bride (82), afin de pousser le joint d'étanchéité dans la seconde direction par rapport à la tige de commande (58).

3. Le joint d'étanchéité pour tige selon la revendication 2, dans lequel la première nervure conique a un angle de conicité d'environ dix degrés.

4. Le joint d'étanchéité pour tige selon la revendication 2 ou 3, dans lequel la première nervure conique (86) évolue avec une conicité allant d'environ 5,79 mm (0,228 pouce) sur le diamètre à environ 7,90 mm (0,311 pouce) sur le diamètre et le ressort a un diamètre interne d'environ 8,03 mm (0,316 pouce).

5. Le joint d'étanchéité pour tige selon l'une quelconque des revendications 1 à 4, dans lequel la surface d'étanchéité (102) conique de la deuxième nervure conique (94) a une conicité sensiblement égale à la conicité de la surface intérieure conique.

6. Le joint d'étanchéité pour tige selon l'une quelconque des revendications 1 à 4, dans lequel la cavité intérieure cylindrique a un diamètre sensiblement supérieur au diamètre de la tige de commande autour de laquelle le joint d'étanchéité est monté de manière qu'il existe un jeu radial entre la tige et la cavité intérieure cylindrique, et en outre dans lequel la surface d'étanchéité prévue pour la tige a une longueur axiale relativement courte par rapport à la longueur axiale du joint d'étanchéité pour tige global, de manière que la résistance à un déplacement axial relatif entre la tige et le joint d'étanchéité soit minimisé.

7. Le joint d'étanchéité pour tige selon l'une quelconque des revendications 1 à 6, dans lequel le joint d'étanchéité pour tige est réalisé en un matériau élastique.

8. Le joint d'étanchéité pour tige selon la revendication 7, dans lequel le joint d'étanchéité pour tige est constitué de polytétrafluoréthylène.

9. Le joint d'étanchéité pour tige selon l'une quelconque des revendications 1 à 6, dans lequel la surface d'étanchéité conique a un angle de conicité d'environ trente degrés.

10. Le joint d'étanchéité pour tige selon la revendication 9, dans lequel la surface intérieure conique a une conicité interne sensiblement égale à la conicité de la surface d'étanchéité conique, et, en particulier, d'environ trente degrés.

11. Le joint d'étanchéité pour tige selon la revendication 9, dans lequel l'angle de conicité interne est d environ trente degrés.

Fig. 1

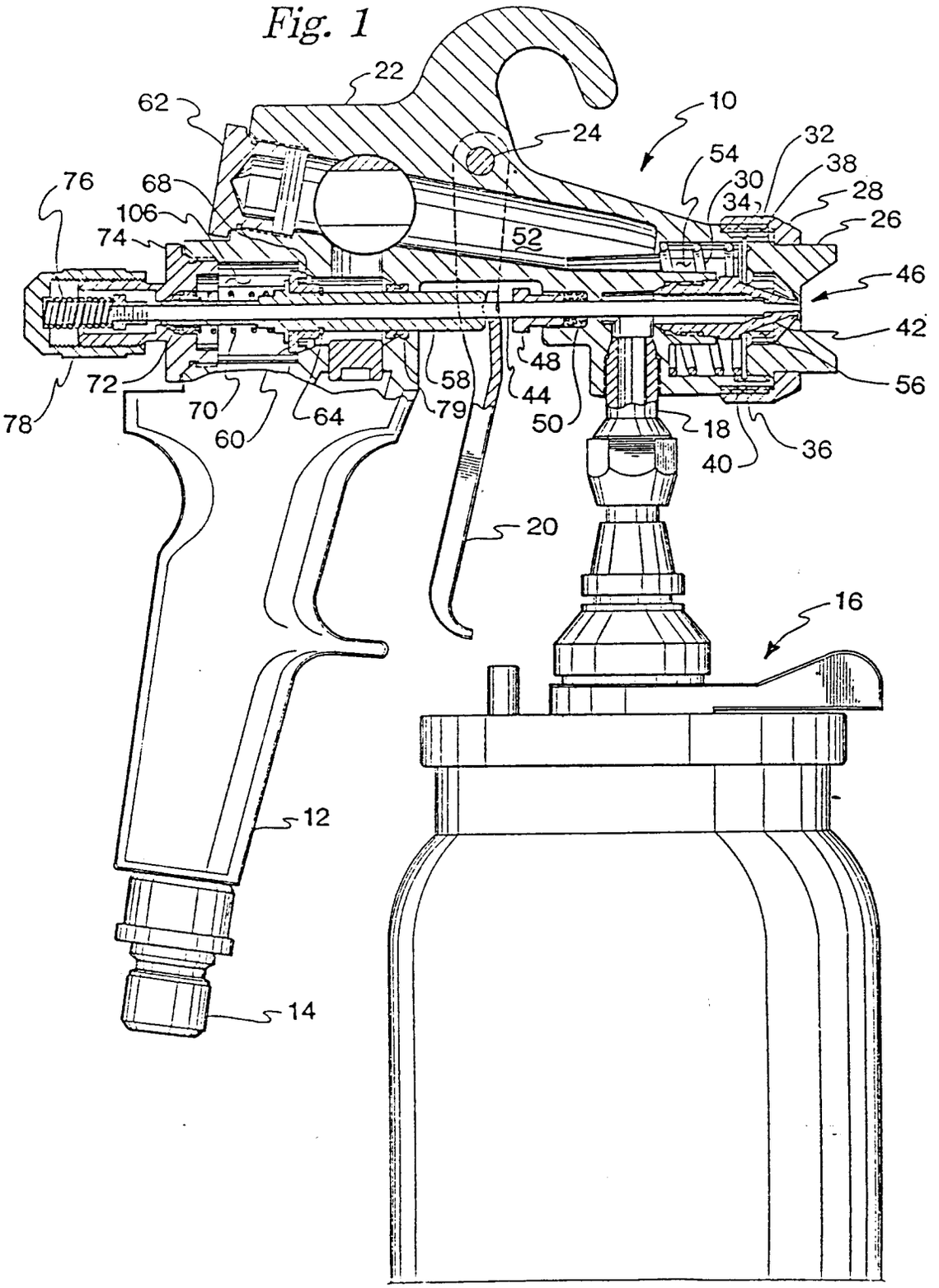
22
62
10
24
32
54
38
30
34
28
76
68
106
26
74
52
46
42
48
72
58
44
56
78
70
64
79
50
18
60
36
40
20
16
12
14

Fig. 2

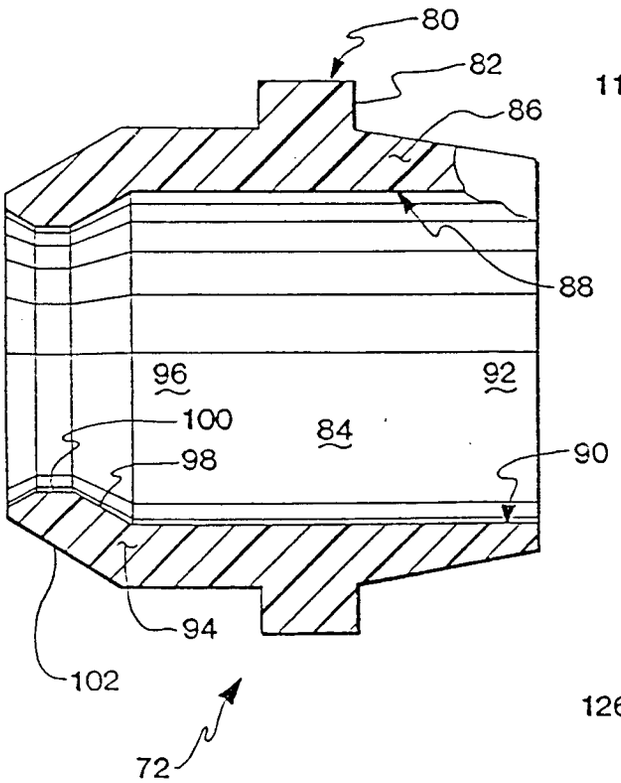
80
82
86
88
96
92
100
84
98
90
94
102
72

Fig. 3

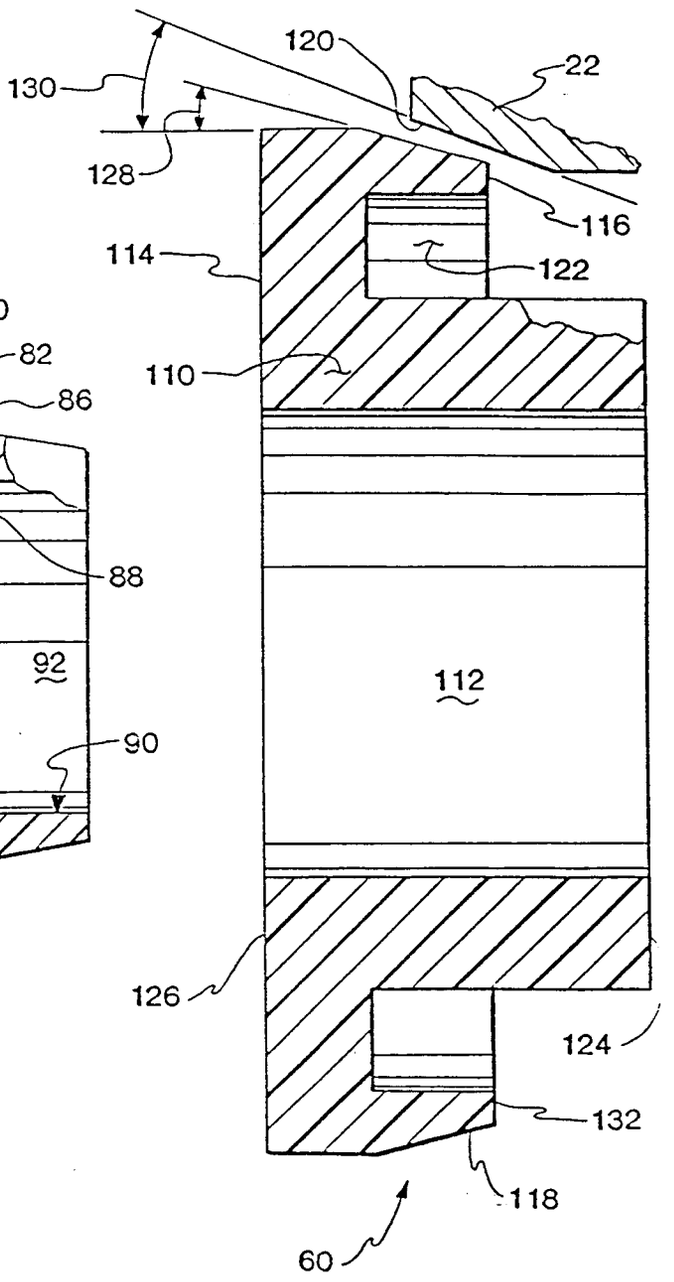
120
22
130
128
116
114
122
110
112
126
124
132
118
60

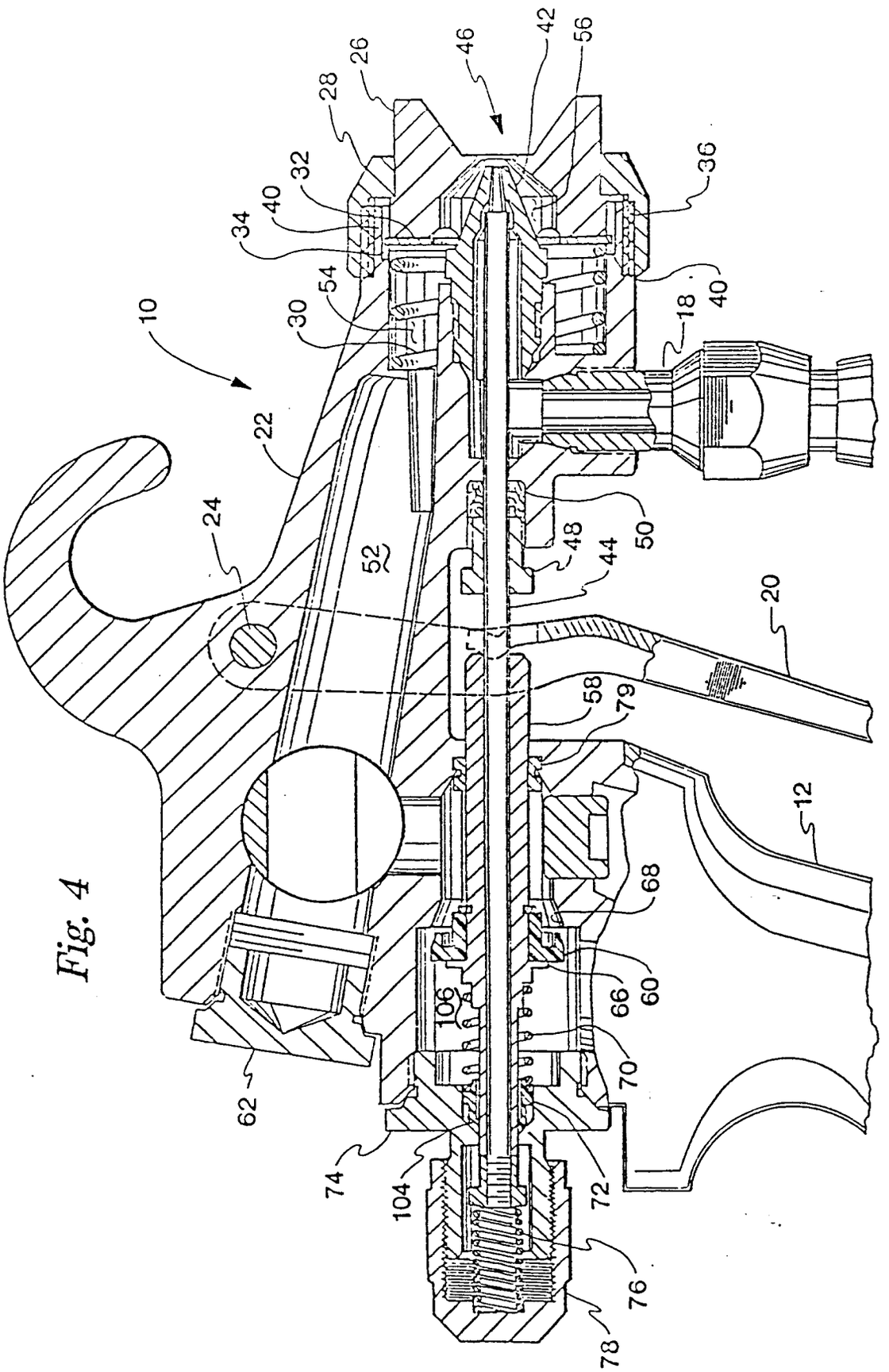
10
12
18
20
22
24
26
28
30
32
34
36
40
42
44
46
48
50
52
54
56
58
60
62
66
68
70
72
74
76
78
79
104
106

Fig. 4

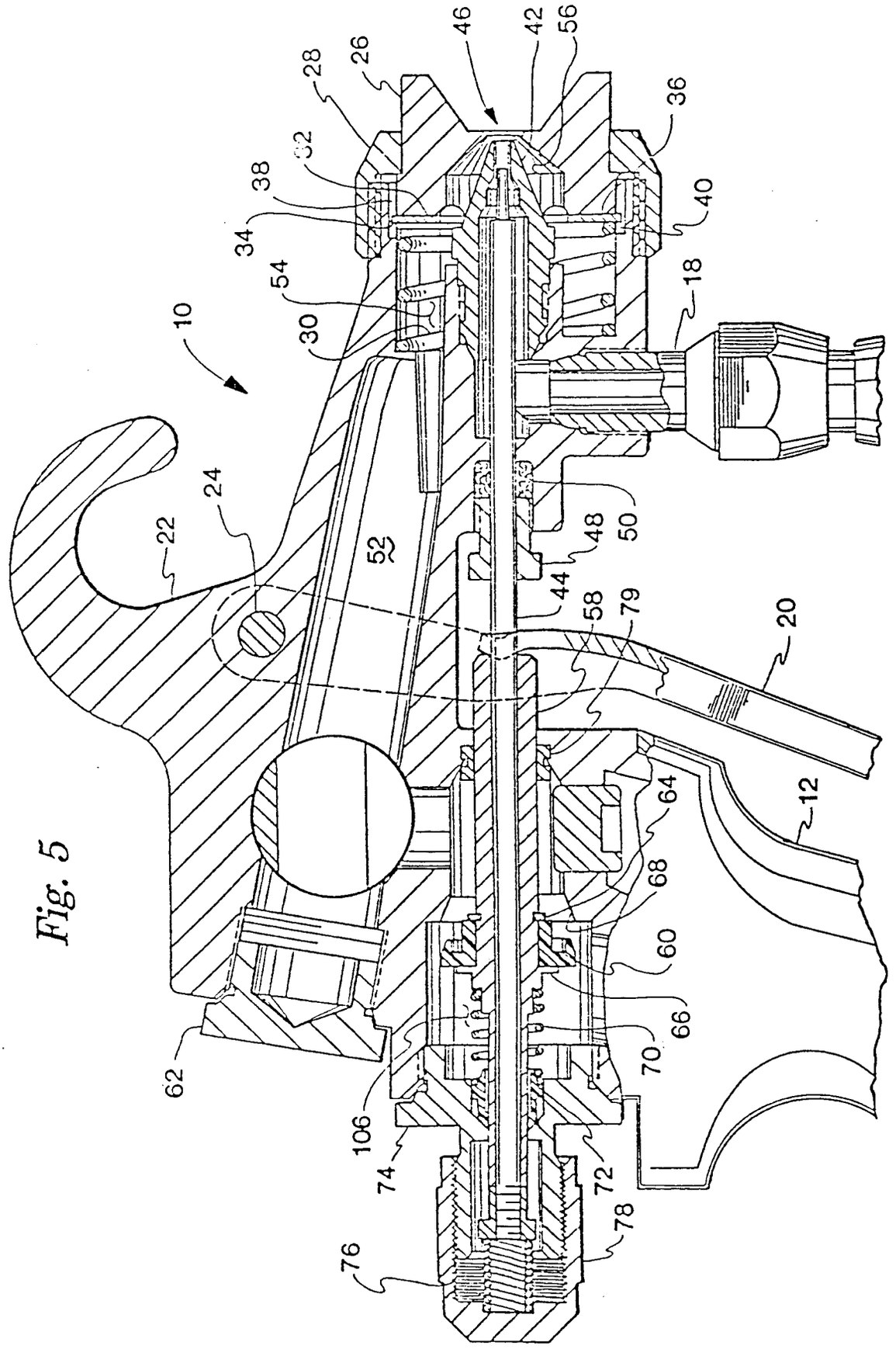
10
12
18
20
22
24
26
28
30
32
34
36
38
40
42
44
46
48
50
52
54
56
58
60
62
64
66
68
70
72
74
76
78
79
106

Fig. 5