Oct. 4, 1966 P. GOLDBLATT 3,276,734

WIG-BLOCK STYLING STANDS

Filed March 11, 1964 2 Sheets-Sheet 1

FIG. 1

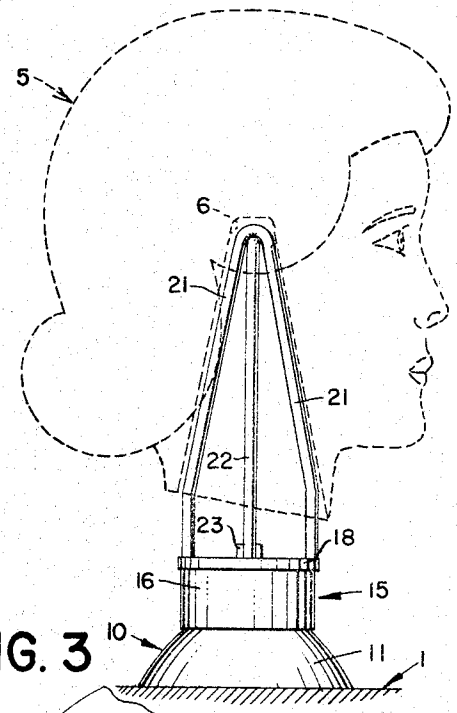

FIG. 2

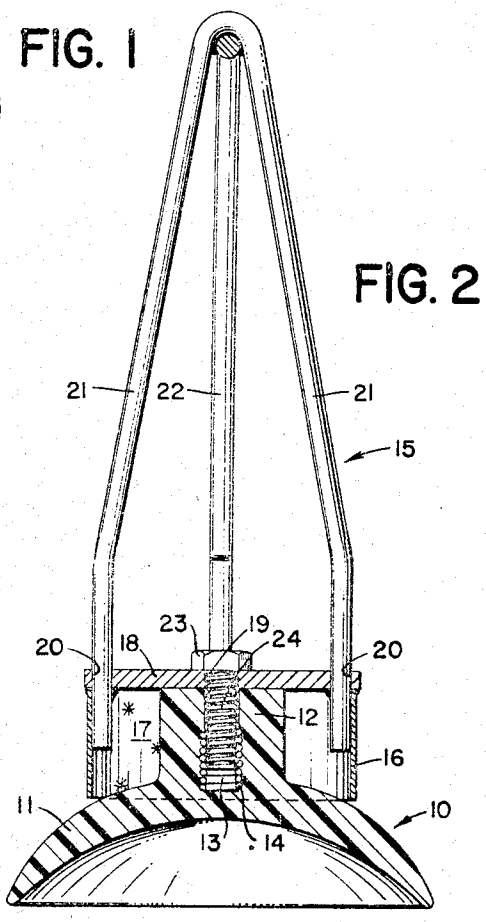

FIG. 3

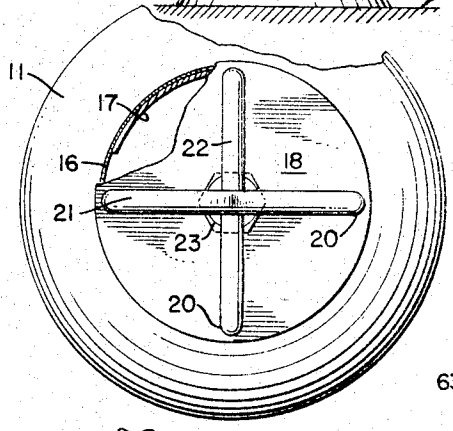

FIG. 4

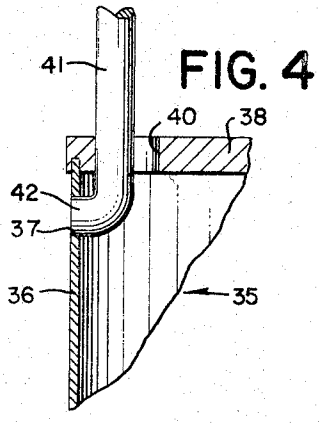

FIG. 5

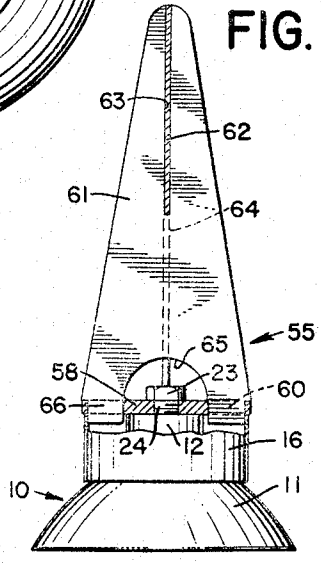

FIG. 6

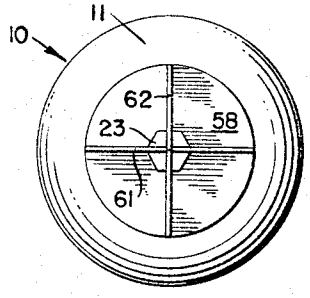

INVENTOR.
PHILIP GOLDBLATT
BY Jacob Stein.
Agent

Oct. 4, 1966 P. GOLDBLATT 3,276,734

WIG-BLOCK STYLING STANDS

Filed March 11, 1964 2 Sheets-Sheet 2

FIG. 7

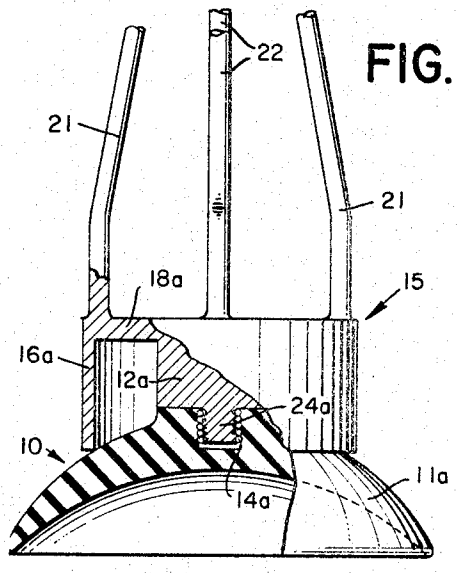

FIG. 8

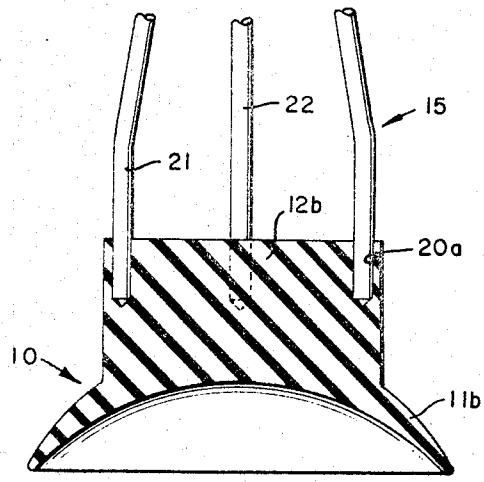

FIG. 9

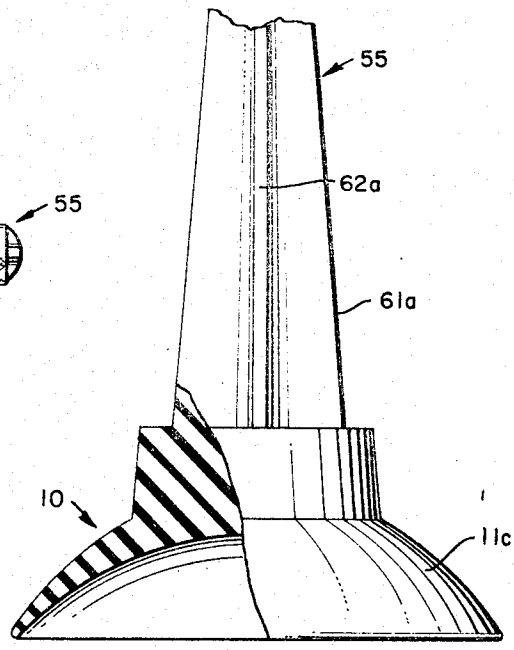

FIG. 10

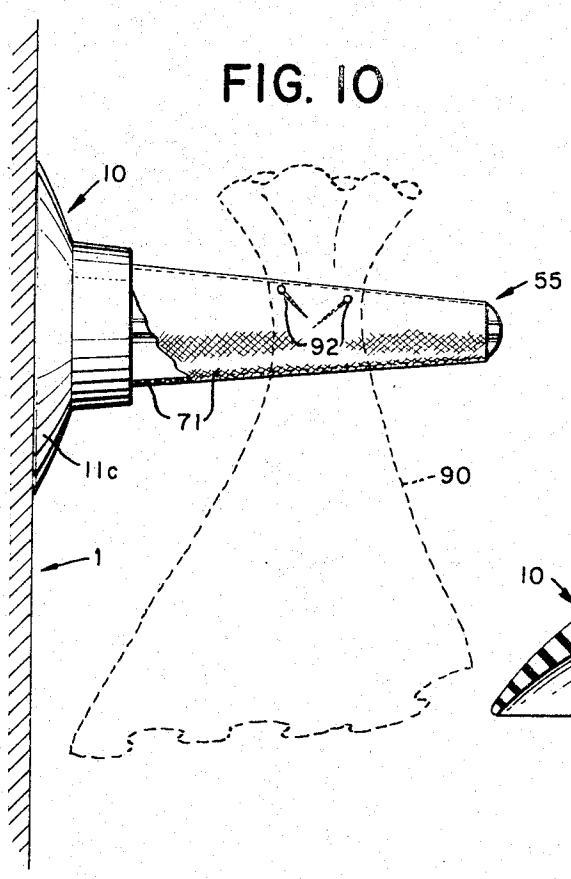

INVENTOR.
PHILIP GOLDBLATT

BY Jacob Stein.

AGENT

United States Patent Office

3,276,734

Patented Oct. 4, 1966

3,276,734

WIG-BLOCK STYLING STANDS

Philip Goldblatt, 325 W. 45th St., New York, N.Y.

Filed Mar. 11, 1964, Ser. No. 351,019
14 Claims. (Cl. 248—176)

The present invention relates to stands or supports, and more particularly to stands for wig blocks, displays, dummy heads or similar articles to be held thereby.

It is known to use various kinds of stands, brackets and like implements to hold objects in stores, display cabinets and the like. Some of these are relatively simple but do not provide the required mechanical stability. Others, in contradistinction, are sturdy and reliable but are considered too cumbersome and involved for the intended purpose.

Thus, for instance, display stands or supports have been made which include clamps and the like means for appropriate attachment to horizontal or vertical surfaces, e.g. shelves, walls of shop windows, etc. Such clamps, by their very nature, are heavy and bulky so that by most users they are considered unsuitable for use for applications where aesthetical appearance is a considerable factor. If the clamps are made weak or small, they do not perform the primary function of immobilizing or properly holding the support and the articles held thereby; also they may cause damage to surfaces.

This is particularly true for applications where fashion, beauty applications and the like are preponderant factors: beauty salons, wig makers, jewelers, and the like places, where, for example, a dummy human head is to be supported. The dummy head in question may be used for fitting thereon a wig, displaying jewels, eye glasses, hats, and the like articles. For such applications it is very important to have a simple yet reliably operating stand in which clumsy clamps and similar mechanical elements are eliminated.

It is, therefore, the object of the present invention to provide a display stand of the kind just described, which is simple yet sturdy in its mechanism, does not have clumsy and bulky clamping parts, and provides safe support for various articles to be held thereby.

It is another object of the invention to provide a stand which can be secured to any vertical or horizontal surface, even with a single hand, for safe attachment thereto, and can again be removed if necessary, likewise with one hand. No clamps, bolts, knobs or like mechanical elements have to be operated.

It is still another object of the invention to allow the novel stand or support readily to be taken apart for storage, shipment and other purposes, without tools and time-consuming measures. At least one of the preferred embodiments can be disassembled so that parts thereof occupy but a minimum of storage space, if not in use.

It is still a further object of the invention to provide a display stand which does not have protruding, uneven or intricate parts in which the articles held thereby might be caught; on the contrary, the inventive stand has the purpose of presenting the least possible chance for textiles, pieces of apparel (e.g. shawls, hats and the like) to get torn or damaged when secured thereto.

According to one of the major features of the inventive stand or support, it comprises but two essential parts: a base member adapted for temporary but secure attachment to various surfaces, and a holding member preferably releasably attached to the base member, for holding the articles for which the display stand is intended to be used.

According to another feature of the invention, the base member is preferably made in the form of a suction

cup, adapted resiliently to hug the surface to which the stand is to be secured.

According to yet another feature, the holding member may be made of relatively light-weight and thin rod-shaped or plate-like members extending axially from the base member. The holding member is preferably given a shape adapted to support various articles thereon, e.g. dummy heads or other articles having a recess or bore therein, and also textile materials, like shawls, piece goods, etc.; however, an infinite number of articles may be displayed with the aid of the inventive support.

In one of the inventive embodiments, the novel stand features resilient holding members which can be inserted in, and removed again from, a cylindrical portion intermediate said resilient members and the cup-shaped base member. This allows for easy and speedy disassemblage, and for storage in a minimum space.

Other objects, advantages and features of the invention will be appreciated and more fully understood with reference to the following detailed description, when considered with the accompanying drawing, wherein

FIG. 1 is a frontal elevational view of one embodiment of the inventive stand, carrying, as a matter of example, a dummy head for display purposes shown in phantom;

FIG. 2 is a partly sectional view of the stand appearing in FIG. 1, on a somewhat larger scale;

FIG. 3 is a top view of the support shown in FIGS. 1 and 2;

FIG. 4 is a partial, sectional view of another inventive stand embodiment;

FIG. 5 is a partly sectional side elevation of a third embodiment of the novel stand;

FIG. 6 is a top view similar to that of FIG. 3 but taken from the support of FIG. 5;

FIG. 7 is a partial, partly sectional view of yet another stand according to the invention;

FIG. 8 is a partial view of still another inventive stand,

FIG. 9 is a partly sectional view of a still further stand embodiment; and

FIG. 10 is yet another embodiment of a display stand according to the invention which carries, as a matter of example, a piece of textile material, shown in phantom.

Describing now the first inventive stand embodiment illustrated in FIGS. 1–3, numeral **10** designates a base member and **15** generally designates a holding member attached thereto. As one possible example of use for the inventive stand or support, a dummy head **5** is illustrated in broken (phantom) lines. It will be understood, however, that this is only meant to illustrate an exemplary application; instead, any other article, merchandise, etc. may be held by the novel display stand. As shown in FIG. 1, base member **10** rests on a surface **1** which, in the exemplary illustration, is horizontal.

Base member **10** consists of a suction cup **11** which has an upper, cylindrical portion **12** provided with an axial bore **13** into which a helically threaded spring element **14** is inserted, for receiving a mating threaded bolt **24** of holding member **15**, to be described in more detail somewhat later.

Holding member **15** comprises an outer cylindrical portion **16** which is, for example, held together by a plate-shaped, arcuate element **17** (best seen in FIG. 3). This may, of course, be substituted by a welding seam or other conventional means for completing a sleeve-shaped element. It has been found that a few spot-welding points will safely secure element **17** to sleeve or cylinder **16**, presenting a smooth and uninterrupted outer surface. A top plate **18** is attached to cylinder **16**, e.g. by welding. In the illustrated stand embodiment of FIGS. 1–3, plate

18 has a central bore 19 and four diametrally arranged apertures 20 therein.

Between pairs of apertures 20, rod-shaped elements 21 and 22 are arranged; these elements are bent into an upwardly tapering form which presents an apex at which the elements may be interconnected, e.g. by welding, if required (shown in FIG. 2). Inside the holding member 15, the bottom ends of rod elements 21, 22 are secured by welding or other means known per se. FIG. 1 readily illustrates the manner in which a recess 6 of head 5 or like article rests on the conical edges of rod elements 21, 22.

Through the central bore 19 of top plate 18, the threaded bolt 24 is passed, as mentioned above, for engagament with spring insert 14 of cylindrical portion 12 atop stop base member 10. Bolt 24 may be rigid with, or may have screwed thereto, a nut 23. Although the latter has been shown above plate 18, it will be understood that the top surface of bolt 24 may be made flush with the top surface of plate 18, without need for a nut or like member if the bolt is welded or otherwise rigidly secured to the plate.

Owing to the provision of threaded bolt 24 in holding member 15 and of threaded bore 13 of base member 10, the two main parts of the support may be readily disassembled and reassembled again, if necessary. It is shown in FIG. 2 that the height of cylinder 16 exceeds to some extent that of the cylindrical rubber portion 12, so that when assembled, the cylinder 16 will neatly hug the curved outer surface of suction cup 11.

It will be appreciated by those skilled in the art that base member 10 may be made of soft or hard rubber, plastic or the like material adapted to produce subatmospheric pressure when pressure is applied in a direction toward the surface 1 against which the support is applied so that air is expelled to some degree from under the cup portion 11.

Now that the structure and operation of a preferred embodiment of the inventive stand has been described, two variants should also be mentioned which have proven to be most economical in manufacture and practical in use. In FIG. 4, which is a partial view similar to that of FIG. 2, a modified top plate 38 is shown which has four diametrally positioned apertures 40 therein. These apertures are wider, at least radially, than the diameter of rod-shaped elements 41 (only one being shown in this embodiment). Each element 41 has an outwardly bent terminal portion 42; the respective aperture 40 is wide enough to allow element 41 with its bent end 42 to be passed therethrough. The holding member of this embodiment, designated 36, has an outer cylindrical portion 36 provided with aperture 37, one for each bent end portion 42 of the rod elements 41.

Instead of having the rod elements welded or otherwise permanently secured to the rest of the holding member, this inventive variant allows the rods to be introduced through the apertures 40 of the top plate 38, slightly pressed inwardly, and then snapped into the apertures 37. The length of bent ends 42 is sufficient to extend to the outer surface of cylinder 36 but not beyond it; thus, a smooth outer surface is obtained which does not tear or otherwise damage articles which get into contact with the display stand. The remaining parts of the described modified embodiment are not shown but are substantially identical with those already described in connection with FIGS. 1 through 3.

It does not have to be emphasized that although welding has been mentioned as means for connecting some of the component parts of the novel support, e.g. between parts of the holding member (top plate, outer cylinder), or between the rod-shaped elements themselves—the latter may be made of sufficiently resilient plastic or other material adapted to be fitted into the top-plate apertures, as described. Also, instead of two rod-shaped elements bent in the form of an inverted V, four individual rods may be used which are held together at their top ends by a securing member (not shown), by welding, or any other conventional means. Furthermore, the top plate may have three or five, or more, symmetrically arranged apertures for an equal number of rods passing therethrough, substantially as described and illustrated.

Another variant, that is, a third inventive stand embodiment, is illustrated in FIGS. 5 and 6. Base member 10 and its suction cup 11 are the same as previously described; also, central, cylindrical portion 12 is shown for securing thereto bolt 24 which has nut 23 attached to it. In this instance, the holding member is designated 55 and includes a top plate 58 to which may be secured outer cylinder 16, in a manner described. Instead of circular apertures (like 20, shown in first embodiment) or elongated ones (like 40, as illustrated in FIG. 4 for second embodiment), slot-like apertures 60 are provided in top plate 58, through which pass the lower limbs or legs of triangular, plate-shaped elements 61 and 62. The former, element 61, has in its top portion a cut-out 63 for accommodating part of element 62; also, the latter, element 62, has in its bottom portion a similar cut-out 64 through which passes part of element 61. These triangular plates do not have to be interconnected since the respective cut-outs, and the recesses of top plate 58 will hold them is a substantially perpendicular position, as shown in FIG. 6. Both plates 61, 62 have at their lower ends recesses 65 (shown for plate 61) so as to clear nut 23. If the latter is omitted, and bolt 24 ends flush with the top surface of plate 58, the portions of plates 61, 62 between their respective peripheral limbs or legs (shown at 66 for element 61) may follow said top surface. In FIG. 5 part of cylinder 16 is broken away to show the connection between the enumerated structural parts.

It is also possible to make the upper part of the base member and the holding member of a unitary piece, adapted for threaded engagement with the lower, suction-cup part of the base member, by intermediary of the afore-mentioned threaded or similar mating elements. Such an embodiment of the inventive stand is illustrated in FIG. 7 wherein the base member, generally designated 10, is constituted by a suction cup 11*a* having an axial bore in which a spring element 14*a* is inserted, similar to element 14 of cylindrical portion 12 of FIGS. 1–3. In this variant, the holding member 15 has portions 16*a*, 18*a* similar to respective portions 16, 18 of the first embodiment (FIGS. 1–3), rigid with a cylindrical portion 12*a* which is the counterpart of the upper base-member portion 12. A threaded bolt 24*a* is attached to the portion 12*a*, for engagement with the spring element 14*a* of the suction cup 11*a*. Rod-shaped elements 21, 22 are shown attached to the portion 18*a* of the holding member 15, in a manner similar to that of the first embodiment.

Still another inventive stand has a unitary or monolithic base member wherein suction cup, outer cylinder and top plate are all molded or extruded of rubber, resilient plastic or like material. This dispenses with a separate upper cylinder portion of the cup portion, with a threaded bore therein, and the mating bolt with nut. A substantially simplified structure results wherein three component parts suffice, viz.: said unitary base member and two (or alternately more) rod- or plate-shaped holding members, as described.

FIG. 8 shows a base member 10 made of a unitary piece of at least partly resilient and compressible material, including a lower part in the form of a suction cup 11*b* and an upper part 12*b* between said suction cup and the holding member 15, the latter being connectable with said upper part. Here again, rod-shaped elements 21, 22 have been shown, as a matter of example, which may be connected by way of apertures 20*a* provided in the upper part 12*b* of the base member.

Still a further embodiment of the stand according to the present invention is one in which the above-described

unitary base member is combined with a single, ribbed holding member, but the whole made of a single rubber or plastic element. FIG. 9 shows such a stand wherein the base member **10** and the holding member **55** are made of a unitary piece of material. The lower part of the base member is again in the form of a suction cup **11***c*, while the holding member proper consists of ribbed portions **61***a*, **62***a* similar to elements **61**, **62**, respectively, of the third embodiment (FIGS. 5, 6).

These additional embodiments provide considerable simplification of manufacture while offering all the advantages of the previously described three embodiments.

While the first and second embodiments (FIGS. 1–3 and 4) of the support according to the invention provide a skeleton-like structure for holding articles thereon, the third embodiment (FIGS. 5, 6) presents planar ribs which act in a similar fashion, e.g., when a dummy head or like article is fitted thereto, which has an internal bore or recess. It will be understood that all the elements **21** and **22**, **41**, as well as **61** and **62** are adapted to have a soft layer of textile or the like material attached thereto (e.g. by glueing), allowing articles to be held thereat by means of pins. The skeleton structure also allows soft textile materials to be pulled therethrough or suspended therefrom (for example, if the display supports of the first two embodiments are secured to a vertical surface). Both types of holding members lend themselves for having articles clipped thereto by means of small clips or clamps, as will be explained hereunder.

FIG. 10 shows yet another display stand according to the invention, wherein a base member, generally designated **10**, is held by subatmospheric pressure onto a substantially vertical surface **1**. As a matter of example, a suction cup **11***c* and a holding member **55** are shown, similar to those of FIG. 9 The member **55** includes a layer **71** of textile or the like material, to which various articles (e.g., a piece of textile material **90**, shown in phantom) may be secured, for example, by means of pins **92**.

The foregoing disclosure relates only to preferred embodiments of the invention which is intended to include all changes and modifications of the examples described within the scope of the invention as set forth in the appended claims.

I claim:

1. A stand for holding, with respect to external surfaces, wig blocks and other articles having an elongated recess therein, comprising attaching means including a lower portion in the form of a suction cup made from a substantially resilient, compressible material, for securing the stand to an external surface by applying sub-atmospheric pressure to said suction cup, holding means connectable with said attaching means and having an elongated, at least partly tapering portion for engagement with the recess in the article to be held, said attaching means and said holding means having a common axis, said attaching means also including an upper portion between said suction cup and said holding means, said upper portion having a bore therein coaxial with said axis, and connecting means for at least temporarily uniting said holding means with said attaching means, said connecting means including mating elements in said bore and in said holding means for threadedly uniting the latter with said attaching means, the latter also including a cylindrical member at least partly surrounding said upper portion and a plate member substantially perpendicular to said axis, at least said plate member having a plurality of first apertures for terminal portions of said holding means.

2. A stand as defined in claim **1**, wherein said mating elements consist of an inner thread in said bore and of a threaded bolt member passing through a substantially central bore in said plate member.

3. A stand as defined in claim **1**, wherein said cylindrical member is formed with a plate-shaped arcuate element secured thereto at its inner surface and clearing said terminal portions of the holding means.

4. A stand as defined in claim **1**, wherein said holding means includes a pair of rod-shaped members in the form of an inverted V, the apex thereof forming said tapering portion, said first apertures being symmetrically and substantially diametrally arranged, said terminal portions of the holding means consisting of the ends of said rod-shaped members which are inserted in said first apertures and secured to said attaching means.

5. A stand as defined in claim **1**, wherein said holding means includes a pair of rod-shaped members in the form of an inverted V, the apex thereof forming said tapering portion, said first apertures being symmetrically and substantially diametrally arranged, said terminal portions of the holding means consisting of the ends of said rod-shaped members which are bent outwardly at substantially right angles, the dimension of said first apertures in radial direction slightly exceeding the length of the outwardly bent ends of the rod-shaped members, said cylindrical member having a plurality of second apertures in radial alignment with said first apertures, said ends of the rod-shaped members being passed through said first apertures and inserted in said second apertures owing to the resilience of said rod-shaped members.

6. A stand as defined in claim **5**, wherein said attaching means further includes a plate-shaped arcuate element secured to and within said cylindrical member in spaced-apart relationship from said ends of the rod-shaped members, said length of the bent ends of said rod-shaped members being such as to form a surface flush with the outer surface of said cylindrical member when said attaching means and said holding means are united.

7. A stand as defined in claim **1**, wherein said holding means includes a pair of plate-shaped members in the form of an inverted V, the apex thereof forming said tapering portion, said first apertures being symmetrically arranged along the major parts of two diameters intersecting at right angles, said plate-shaped members having each a complementary axial cut-out therein allowing said members to be interengaged in right-angled relationship, said terminal portions of the holding means consisting of the ends of said plate-shaped members which are inserted in said first apertures and secured to said attaching means.

8. A stand as defined in claim **7**, wherein said attaching means further includes a plate-shaped arcuate element secured to and within said cylindrical member in spaced-apart relationship from said ends of the plate-shaped members, the latter having recesses adjacent said plate member for clearing a protruding portion of one of said mating elements.

9. A stand as defined in claim **1**, wherein said holding means includes at least three rod-shaped members and a securing member for connecting the outer ends of said rod-shaped members so as to form said elongated portion, said terminal portions of the holding means consisting of the inner ends of said rod-shaped members which are inserted in said first apertures, the latter being symmetrically arranged in said plate member.

10. A stand for holding, with respect to external surfaces, wig blocks and other articles having an elongated recess therein, comprising attaching means including a lower portion in the form of a suction cup made from a substantially resilient, compressible material, for securing the stand to an external surface by applying subatmospheric pressure to said suction cup, holding means connectable with said attaching means and having an elongated, at least partly tapering portion for engagement with the recess in the article to be held, said attaching means and said holding means having a common axis, said attaching means also including an upper portion between said suction cup and said holding means, said suction cup having a bore therein coaxial with said axis, and connecting means for at least temporarily uniting said holding means with said attaching means, said con-

necting means including mating elements in said bore and in said upper portion, the latter and said holding means being made of a unitary piece adapted for threaded engagement with said suction cup by the intermediary of said mating elements.

11. A stand as defined in claim **10**, wherein said mating elements consist of an inner thread in said bore and of a threaded member protruding from said upper portion.

12. A stand for holding, with respect to external surfaces, wig blocks and other articles having an elongated recess therein, comprising attaching means including a lower portion in the form of a suction cup made from a substantially resilient, compressible material, for securing the stand to an external surface by applying subatmospheric pressure to said suction cup, holding means connectable with said attaching means and having an elongated, at least partly tapering portion for engagement with the recess in the article to be held, said attaching means and said holding means having a common axis, said attaching means also including an upper portion between said suction cup and said holding means, and connecting means for at least temporarily uniting said holding means with said attaching means, wherein said upper portion is also made of a resilient, compressible material, unitary with said lower portion, said holding means being connectable with said upper portion.

13. A stand for holding, with respect to external surfaces, wig blocks and other articles having an elongated recess therein, comprising attaching means for securing the stand to an external surface by applying subatmospheric pressure to said attaching means, and holding means having an elongated, at least partly tapering portion for engagement with the recess in the article to be held, said attaching means and said holding means being made of a unitary piece of at least partly resilient and compressible material, the lower portion of said attaching means being in the form of a suction cup for securing the stand to the external surface.

14. A stand for holding various articles with respect to external surfaces, comprising attaching means for securing the stand to an external surface by applying subatmospheric pressure to said attaching means, and holding means connectable with said attaching means and having an elongated, at least partly tapering portion for engagement with at least a portion of the article to be held, said holding means including a layer of textile material applied to at least part of said elongated portion, for allowing the article to be secured thereto.

References Cited by the Examiner

UNITED STATES PATENTS

1,804,931	5/1931	Hoban	211—33
1,960,370	5/1934	Cassese	211—33
2,107,178	2/1938	Fackler	211—33
2,117,081	5/1938	Copeland	223—66
2,785,010	3/1957	Nelson	299—75
2,912,200	11/1959	Reinhorn	248—103

CLAUDE A. LE ROY, *Primary Examiner.*

CHANCELLOR E. HARRIS, *Examiner.*

K. J. WINGERT, *Assistant Examiner.*