1/4

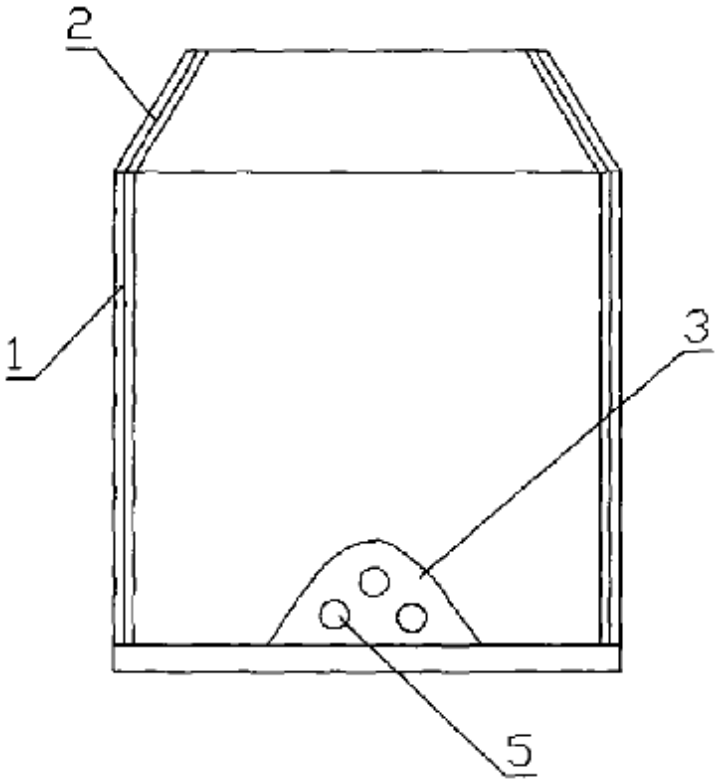

Figure 1

(Chetan Chadha)
Patent Agent for the Applicant

2/4

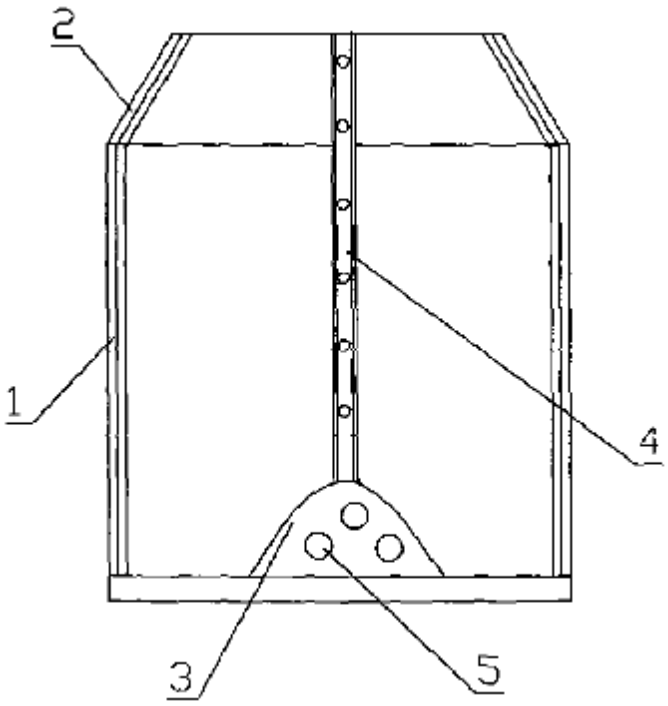

Figure 2

(Chetan Chadha)
Patent Agent for the Applicant

3/4

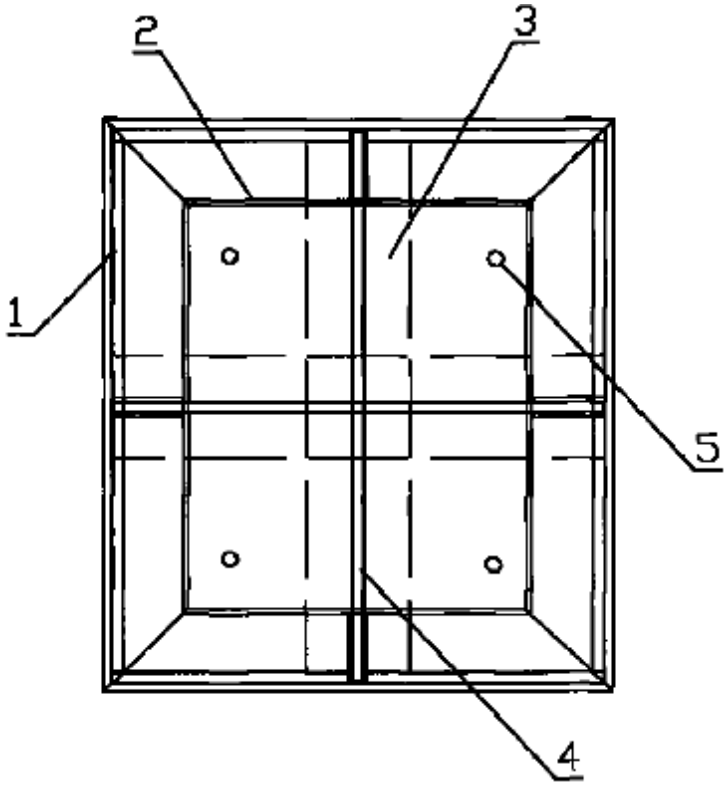

Figure 3

(Chetan Chadha)
Patent Agent for the Applicant

4/4

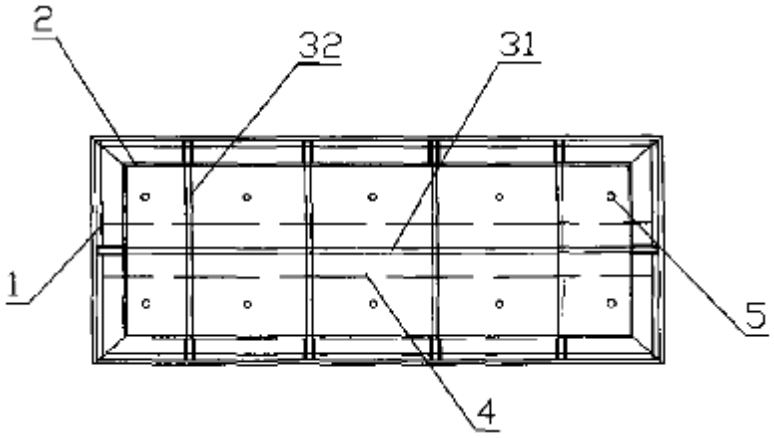

Figure 4

(Chetan Chadha)
Patent Agent for the Applicant