No. 836,144. PATENTED NOV. 20, 1906.

C. K. SCHADE.

LANTERN.

APPLICATION FILED MAY 14, 1906.

FIG. 1

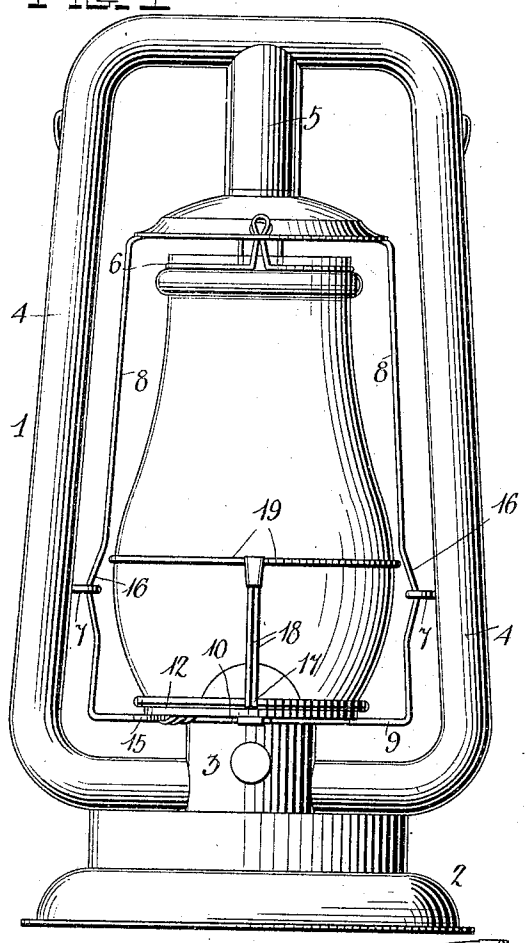

FIG. 2

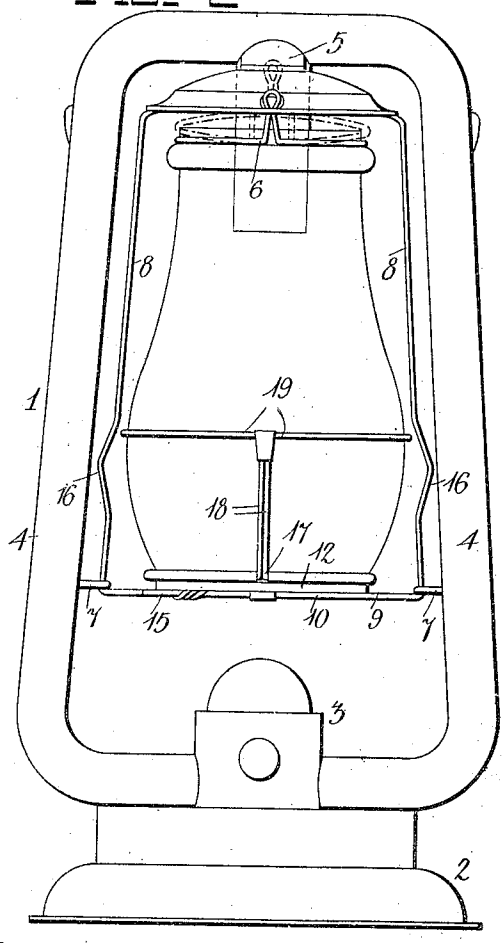

FIG. 3

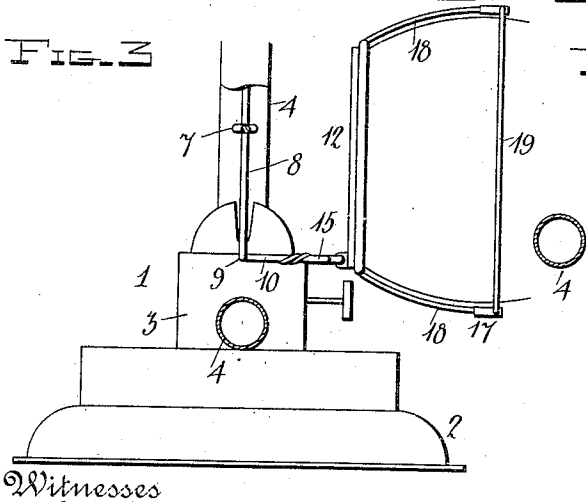

FIG. 4

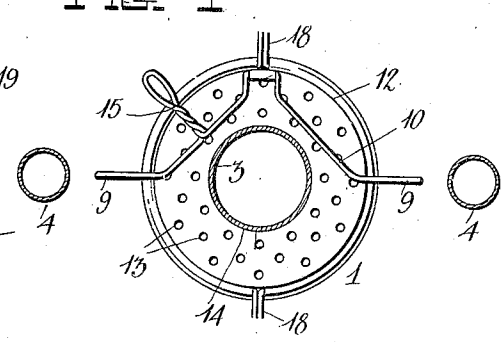

Witnesses

T. L. Bonkins

L. O. Hilton

Inventor

Calvin K. Schade

by Chas. R. Miller

Attorney.

THE NORRIS PETERS CO., WASHINGTON, D. C.

UNITED STATES PATENT OFFICE.

CALVIN K. SCHADE, OF CANTON, OHIO.

LANTERN.

No. 836,144. Specification of Letters Patent. Patented Nov. 20, 1906.

Application filed May 14, 1906. Serial No. 316,840.

To all whom it may concern:

Be it known that I, CALVIN K. SCHADE, a citizen of the United States, residing at Canton, in the county of Stark and State of Ohio, have invented new and useful Improvements in Lanterns, of which the following is a specification.

This invention relates to improvements in lanterns.

The object of the invention is to provide a lantern having an improved globe-supporting attachment by means of which the globe-holding frame and globe may be raised or lowered and held in said raised or lowered positions against casual movement.

With the above and other objects in view the invention consists of certain novel features of construction, combination, and arrangement of parts, as will be hereinafter described and claimed.

In the accompanying drawings, Figure 1 is a side view of a lantern, showing the attachment applied thereto and the globe down or in closed position. Fig. 2 is a similar view showing the globe raised and supported by the attachment. Fig. 3 is a side view of the lantern, taken at right angles to Figs. 1 and 2 and showing the globe-supporting plate and guard tipped back in position for the removal of the globe; and Fig. 4 represents a bottom plan view of the globe-holding plate, showing the supporting attachment to which the same is pivoted.

Referring more particularly to the drawings, 1 denotes the lantern, which may be of any desired make or style, the same being here shown as a tubular lantern having a base portion 2, in which is arranged the oil-font and the burner-support 3, to which is connected the lower ends of side draft-tubes 4, forming the frame of the lantern. The upper ends of the tubes 4 are connected to the usual centrally-disposed downwardly-projecting draft-tube and cap-guide 5, on which is slidably mounted the cap or cover of the lantern. To the under side of the cap 5 is secured the usual spring-wire globe-clamp 6.

Secured to the inner sides of the draft-tubes 4 and projecting inwardly therefrom are guide eyes or loops 7, in which are slidably mounted the side bars 8 of my improved globe-support. The upper ends of the latter are rigidly connected to the cap 5 at diametrically opposite points on the same. At their lower ends the side bars 8 are bent inwardly at right angles, as shown at 9, and thence forwardly in a horizontal plane to form a substantially **V**-shaped support 10, to the point of which is hingedly connected a globe-holding plate 12. The plate 12 may be of the usual or any suitable construction and is here shown as provided with ventilating-perforations 13 and a centrally-disposed aperture 14 to fit over and engage the burner. In one side of the support 10 is arranged the forwardly-projecting operating handle or finger-piece 15, said handle being formed by preferably bending a loop in said side of the **V**-shaped support and then twisting the loop, as shown. The side bars 8 of the globe-support are arranged at a greater distance apart at the holding-plate than at their upper ends and converge gradually from the right-angularly-bent portions 9 upwardly to the cap 5. The bars 8 have formed therein a short distance above said right-angularly-bent portions thereof outwardly-bent locv-bent portions thereof outwardly-bent locking-curves 16, which are adapted to engage the eyes 7 on the tubes 4 when the supporting-frame and globe are in a lowered or closed position, as shown in Fig. 1, thereby holding said globe and frame down against casual upward movement. When the frame and globe are arranged in an elevated position, as shown in Fig. 2, that portion of the side bars between said guide-loops and the right-angularly-bent ends of the bars will be brought into tight frictional engagement with the loops or eyes 7, thereby supporting said frame and globe in an elevated position.

The globe-holding plate 12 is provided with an upwardly-projecting annular flange, to which is secured the globe-guard 17, which may be of any suitable form, but which is here shown as consisting of right-angularly-bent outwardly-curved bars 18, which extend upwardly a suitable distance at opposite sides of the globe and are thence bent at right angles to form loops 19, which encircle the globe and protect the same from being broken. The upper ends of the bars 18 are preferably secured together by short metal clips bent around the same, as shown.

A globe-supporting attachment formed of a single piece of wire bent into suitable shape to form locking devices, as herein shown and described, will be found to be simple, strong, durable, and inexpensive in construction, efficient and reliable in operation, and well adapted to the purpose for which it is designed. By hingedly connecting the globe-

holding plate to said supporting device the plate and guard-frame may be readily swung to one side when the globe-clamp 6 is disengaged from the upper end of the globe, thereby providing for the quick and easy removal of the globe from the lantern.

From the foregoing description, taken in connection with the accompanying drawings, the construction and operation of the invention will be readily understood without requiring a more extended explanation.

Various changes in the form, proportion, and the minor details of construction may be resorted to without departing from the principle or sacrificing any of the advantages of this invention as defined by the appended claim.

Having thus described my invention, what I claim as new, and desire to secure by Letters Patent, is—

A globe-supporting attachment for lanterns comprising a single piece of wire bent to form a horizontally-arranged V-shaped globe-plate support having lateral arms and hingedly connected with a globe-plate, said arms being upwardly bent at right angles to form side bars with the free ends thereof secured to the lantern-cap, said side bars having means for engagement with the lantern-frame to hold said globe-supporting attachment in adjusted position and a handle or finger-piece formed on said support.

In testimony whereof I have hereunto set my hand in the presence of two subscribing witnesses.

CALVIN K. SCHADE. [L. S.]

Witnesses:
FRANK A. SCHWERTNER,
HARRY G. GELTZ.