Office de la Propriété Intellectuelle du Canada
Un organisme d'Industrie Canada

Canadian Intellectual Property Office
An agency of Industry Canada

CA 2255969 C 2003/04/01

(11)(21) 2 255 969

(12) BREVET CANADIEN
CANADIAN PATENT

(13) C

(22) Date de dépôt/Filing Date: 1998/12/14

(41) Mise à la disp. pub./Open to Public Insp.: 1999/06/30

(45) Date de délivrance/Issue Date: 2003/04/01

(30) Priorité/Priority: 1997/12/31 (09/001,736) US

(51) Cl.Int.^{6}/Int.Cl.^{6} A47K 7/00, A47K 10/24, A47K 5/06, E03C 1/05, G05B 19/418, G05B 24/02

(72) Inventeurs/Inventors:
GAUTHIER, JEROME M., US;
VUONG, NHON T., US;
SIPPEL, MARK J., US

(73) Propriétaire/Owner:
SLOAN VALVE COMPANY, US

(74) Agent: DENNISON ASSOCIATES

(54) Titre : METHODE ET APPAREIL DE SEQUENCEMENT DU LAVAGE A LA MAIN
(54) Title: METHOD AND APPARATUS FOR PROPERLY SEQUENCED HAND WASHING

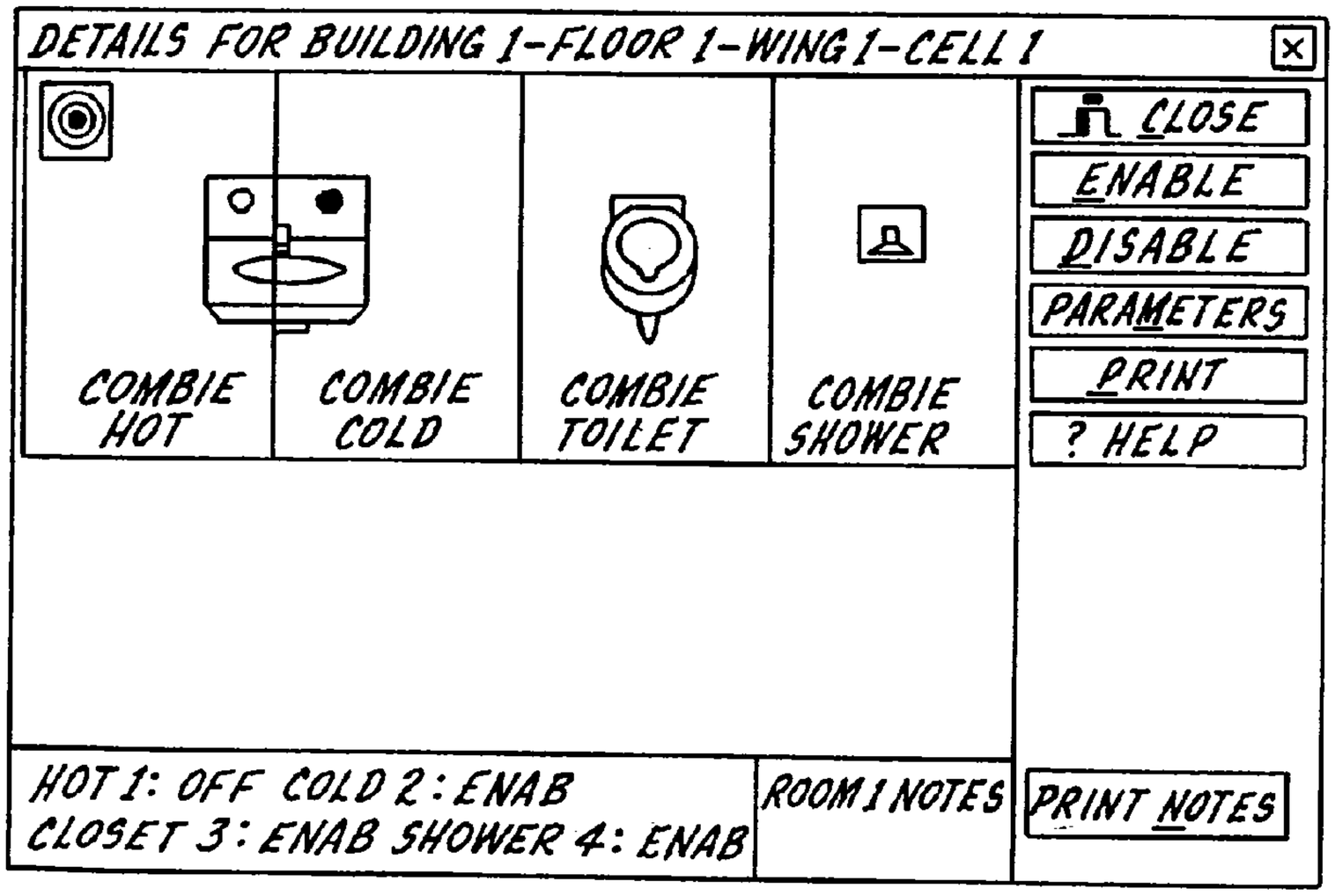

(57) Abrégé/Abstract:
An apparatus and method for controlling plumbing fixtures includes an electronic control board having a microprocessor that accepts four inputs and produces four outputs. Inputs at other than the microprocessor's operating voltage are converted thereto. Outputs having different voltages are controlled by latching relays. The control board can be used with a Smart Sink that requires a sequenced hand washing. The control board can form a node on a network that monitors and controls the functions of multiple boards throughout a facility.

Abstract of the Disclosure

An apparatus and method for controlling plumbing fixtures includes an electronic control board having a microprocessor that accepts four inputs and produces four outputs. Inputs at other than the microprocessor's operating voltage are converted thereto. Outputs having different voltages are controlled by latching relays. The control board can be used with a Smart Sink that requires a sequenced hand washing. The control board can form a node on a network that monitors and controls the functions of multiple boards throughout a facility.

Background of the Invention

This invention relates to an apparatus and method for monitoring and controlling usage of water. Various electrical controls for plumbing fixtures are known in the art. Some examples are shown in U.S. Patent 5,060,323 and U.S. Patent 5,031,258. These controls typically employ water valves operated electrically by solenoids, together with various types of switches for activating the solenoids at desired times. The switches include pushbutton switches, infrared sensors in reflective mode or break-beam mode for determining when a user is present and when water should be supplied.

One of the problems with prior art controls is their inherent lack of flexibility. The controls can only perform one function with one type of fixture. Yet there is a wide variety of plumbing fixtures that need to be controlled, such as sinks (with temperature controlled either by pre-set hot and cold water mixing or user-selectable mixing), showers, urinals and water closets. It is also sometimes desirable to control related apparatus such as soap dispensers and towel dispensers. Existing controls cannot be used with all of these different facilities, at least not without substantial alteration of their basic functions to the point of totally rebuilding the controls to suit a different device. Further complications arise due to the fact that some controlled devices (sinks, showers, soap dispensers) need to respond to the arrival or presence of a user, while other devices (urinals, water closets) need to be aware of the presence of a user but not operate until the user leaves a target zone.

Prior art controls are simply not set up to operate multiple types of fixtures in the various modes needed.

In many institutional settings it would also be desirable to allow the operator of the facility to select particular operating characteristics of an apparatus. For example, in dormitories and barracks it might be useful to limit the length of time a shower will operate. Correctional institutions may want to limit the number of times a water closet may be flushed within a given time window. Health care or food service operations may prefer a hand washing apparatus which will assure proper hand washing procedure by the restaurant employees or hospital personnel in order to reduce the chance of contamination. Being able to choose these limits would be highly useful in these settings and others but the lack of flexibility in existing controls prevents it.

Another desirable feature of water usage controls is the ability to monitor remotely what is going on at a particular fixture or at all fixtures throughout a building or institution. A further desirable feature would be to alter remotely how a particular fixture operates. This requires communications capabilities that are not found in existing controls.

Summary of the Invention

The present invention is directed to a control board for plumbing fixtures that can be used with a wide variety of fixtures. The board has a microprocessor which is programmable from either a stored program or downloaded instructions or a combination of these. The microprocessor operates in any desired mode with settings that are either pre-determined or set individually as desired. The settings establish a timing control for the

controlled device, be it a sink, shower, water closet or some combination of these. The timing control includes a delay before activation, a run time, a delay after activation, the counting of cycles within a selected time window, and an imposed lockout or inhibit time if a cycle count limit is exceeded.

The control board can operate either as a stand alone device or in a computer network, in which case the board communicates via either twisted pair or a power line with a central computer for monitoring and control purposes. The board can control solenoid valves or the like either directly or through auxiliary boards. Input jacks on the control board can accept signals ranging from 1.3 VAC to 120 VAC and 1.3 VDC to 100 VDC. An opto-isolator can be used, if necessary, to convert input voltages other than the one used by the microprocessor. The output section of the board uses latching relays to conserve power. Three different outputs can be provided, depending on the needs of the controlled device. These outputs include two different on-board voltages or an off-board voltage. A switch closure can also be provided to govern operation of a self-powered controlled device.

Brief Description of the Drawings

Figs. 1-7 together comprise a circuit diagram of the 4IO board. More specifically Fig. 1 is the power supply section of the board.

Fig. 2 shows representative samples of the input and output sections, only one of each being shown for clarity.

Fig. 3 shows the microprocessor and some auxiliary functions and the output addressing chip. The circuits in Figs. 2 and 3 are joined at junctions V, W, X, Y and Z.

Fig. 4 shows the microprocessor, the EPROM and a portion of the flash option.

Fig. 5 shows the off-board voltage connector and one of the jumpers for selecting outputs.

Fig. 6 shows the PLT-21 communications option.

Fig. 7 shows the FTT-10A communications option.

Fig. 8 is a longitudinal section of a pushbutton switch used to actuate a plumbing fixture.

Fig. 9 is a circuit diagram of a latching relay.

Figs. 10 and 11 comprise a flowchart of the 4IO software.

Fig. 12 is a block diagram of the Smart Sink.

Figs. 13 through 26 comprise a flowchart of the Programmed Water Technologies network software.

Fig. 27 is the main menu screen of the network software.

Fig. 28 is the detail form of the network software showing the devices in a particular room.

Detailed Description of the Invention

The present invention encompasses a new control board that can be used with plumbing fixtures such as sinks, showers, water closets, urinals and combinations of these. The board can provide the central control of a programmed scrub sink referred to herein as a Smart Sink. The board can also provide network communications with a central computer

for monitoring and data logging plumbing fixtures throughout a facility in a system referred to as Programmed Water Technologies. The present description will deal with these three major areas: the 4IO board, the Smart Sink and its software, and the Programmed Water Technologies network software.

I. The 4IO Board

A schematic diagram of the control board 10 of the present invention is shown in Figs. 1-7. This particular embodiment can accept input from four sensors or switches and direct output to four controlled devices. Due to this capability of handling four inputs and outputs, it is referred to herein as a 4IO board. It will be understood that different numbers of inputs and outputs could be used within the scope of the present invention. A description of the major components of the 4IO board follows.

A. Power Supply Section

The power supply section of the board is shown generally at 12 in Fig. 1. An off-board transformer (not shown) will provide 24 VAC to connector TB1. The transformer is somewhere upstream outside of the 4IO board. Typically it is connected to the 120 VAC power main of the building. It could be a transformer that is supplying power to one board or it could be a transformer supplying power to many boards. Line 13 from TB1 is connected to one side FH3 of a fuse holder. The other side FH1 of the fuse holder is connected to output power line 14, which is marked 24 VAC. This output power line 14 is connected to any other location on the circuit diagram similarly marked 24 VAC. The fuse F2 in holder FH1, FH3 is a slow blow, two-amp fuse that limits the power output on line 14.

Line 13 has filters indicated at inductor L5, capacitor C33 and resistor R40, and inductor L1 and resistor R12. Then there is another fuse F1 in microfuse holder FH2 to protect the 5-volt logic circuit. Fuse F1 is a quick-blow fuse rated at two amps. The 24 VAC goes through the second fuse F1 to a bridge rectifier D1 which turns the 24 VAC into approximately 30 VDC on line 16. An LED D35 indicates the presence of the 30 VDC. A capacitor C6 charges up to maintain a stable input. That is used as a reserve so if there is a small brownout, or if the line 16 goes down, there is a small reserve of power. The board can survive off this reserve for a short period of time.

Line 16 feeds the 30 VDC to a 9-volt switcher U6 which allows voltage up to 9 volts DC to go through to line 18. When voltage to line 18 starts to exceed 9 VDC the switcher turns off. When the voltage falls back below 9 volts the switcher turns back on. So the switcher produces a pulsating 9 volts DC on line 18. A filter comprising inductor L2 and resistors R18, R19 conditions the voltage. The purpose of the 9-volt switcher U6 is to reduce the voltage going through to a 5-volt regulator U7. If the circuit went directly from 24 VAC through the bridge rectifier to the 5-volt regulator, the 5-volt regulator would overheat. Since the 9-volt switcher is required anyway, that 9 volt power is supplied on output line 20. Other locations on the circuit marked +9V are connected to line 20. Among other things the 9 VDC is used to activate the latching relays in the output section, as will be explained below. A latching relay only needs a 10 millisecond pulse to latch or unlatch. The switcher U6 is going to be on most of the time so usually when the 9 VDC is needed it will be there. There is also a capacitor C7 connected to line 18 to store up some power. In

the event that the switcher U6 happens to be off when relay activation is called for, capacitor C7 will be able to supply the short pulse needed to latch the relay.

The 9 VDC is supplied to the 5-volt regulator U7. The 5-volt regulator takes the 9 VDC and drops it down to 5 VDC, which is the operating voltage for the microprocessor and the rest of the logic circuit. The 5 VDC is supplied on output line 22. Locations on the circuit marked VCC are connected to line 22. Capacitor C21 is a high pass filter.

Taken together the power section is capable of supplying 24 VAC on line 14, 9 VDC on line 20 and 5 VDC on line 22.

B. Microprocessor

The functions of the 4IO board are controlled by a microprocessor U12 (Figs. 3 and 4). The microprocessor is preferably a neuron type 3150, such as a TMP N3150 B1AF from Echelon Corporation of Palo Alto, California, although others may suffice. It is designed to run at a specified operating voltage, in this case 5 VDC. The microprocessor has an internal electrically erasable, reprogrammable memory that will be referred to herein as the EE section of the microprocessor. The EE section is non-volatile memory, meaning that the information in the EE section will not be lost even if the power goes out. The microprocessor has three internal processors. One of these runs the 4IO software described below. Another runs communications software that is provided with the chip. The third processor runs software that translates information between the first two processors.

The first processor runs a 4IO program stored in an EPROM U3 (Fig. 4). The program is burned it into the chip and therefore is fixed. The EPROM communicates with the microprocessor through lines A0 to A15 and D0 to D7.

The 4IO board has heads or connectors built into it to provide a stuffing option that allows for an alternate embodiment called a flash option. The stuffing option can receive the logic chips shown generally at 24. When these chips are provided the regular EPROM U3 is replaced with a flash EPROM, also known as an EEPROM (for electrically erasable programmable read only memory). When a flash EPROM is used an operator can download new software and store it in the flash EPROM. Thus, the entire program can be rewritten. With the regular EPROM changing the software requires putting in a new EPROM chip. The details of the 4IO software will be discussed below.

It will be noted that several clean-up capacitors are used to clean up the 5 volts that is being distributed throughout the chips. Capacitors C8 and C17 (Fig. 4) form a high pass and a low pass filter. Capacitors C15, C22, C26, C25, C27 serve as high pass filters. In the event that the power drain upstream limits the voltage, capacitor C8 will also serve as a small battery for the 5 VDC source.

C. Input Section

A description of the input section details will benefit from a preliminary discussion of the various remote switches and sensors that might be found on a controlled device, i.e., on a sink, shower or water closet.

A commonly-used switch is an inductive pushbutton switch, as shown at 19 in Fig. 8. The switch 19 has a cylindrical housing 21 which has external threads for engaging a mounting nut 23 and a wall flange 25. The housing is clamped to an appropriate fixed mounting surface 27 by the nut 23 and wall flange 25. Typically the mounting surface 27 will be a wall near the sink, water closet or shower or it might be a part of the fixture itself.

A washer 28 and spacer 29 assist the clamping action. The wall flange 25 retains a pushbutton 30 which is slidable through a central opening in flange 25. The pushbutton abuts one end of a flanged filler tube 31. The other end of tube 31 adjoins a T-shaped plunger 32, which is made of ferrous metal. The plunger 32, filler tube 31 and pushbutton 30 are all biased to the left of Fig. 8 by a spring 33. Spring 33 bears against a packing 34 which is retained by a bushing 37. The bushing is threaded to the housing 21. A proximity sensor 35 is mounted in the packing 34. Three conductors 36A,B,C supplying 5 volts DC, a return signal and a ground, respectively, are attached to the proximity sensor 35 and run back to the 4IO board. When a user of the controlled device pushes the pushbutton 30 it carries the plunger 32 close to the sensor 35 and changes the magnetic field adjacent the sensor. The altered magnetic field triggers a circuit inside the sensor 35 which closes a circuit between lines 36A and 36B, thereby creating a 5 VDC return signal. The sensor is a readily available item and itself forms no part of the present invention.

It will be understood that while the pushbutton switch is commonly used to indicate to the 4IO board a user's request for operation of a plumbing fixture, other types of devices can also be used. For example, infrared light sensors can be used to detect the presence of a user. An infrared emitter and detector can be placed adjacent one another and infrared light reflected back from, say, a user's hands under a faucet, will trigger the detector. Or the emitter and detector can be separated with the emitter focused on the detector. When a user breaks the light beam between the emitter and detector a signal is triggered. When greater distances between the 4IO board and a switch are required, a reed switch and a 24 VAC supply and signal may used, rather than the 5 VDC. Or a relay switch

may be used with 5 volts going in with the return line coming back. In that case, instead of just a piece of ferrous metal in the housing, there is a magnet. When the magnet comes close to the relay switch, the relay switch makes a contact which then gives a 5 volt return signal.

Other inputs to the microprocessor may involve monitoring the activities of various components, rather than looking for remote switch closures. For example, it may be desired to monitor a 16 VDC motor or a 24 VAC solenoid to find out when they activate so some action can be taken in response thereto.

The foregoing illustrates that the 4IO board must have the ability to accept a wide variety of input signals. The input section that provides that ability will now be described. The 4IO board communicates with the various switches or sensors of a controlled device through four RJ-11 style input jacks, one of which is shown at J4 in Fig. 2. Jack J4 is connected by jumpers JP9 and JP10 to an inverting Schmitt trigger U2A, either directly or through an opto-isolator U1A. The Schmitt trigger is connected to an I/O port of the microprocessor by line 26A as shown. The jumpers may have shunt clips that simply connect selected pairs of pins to one another.

Pin 1 of J4 is connected to the 24 VAC source as shown. If the particular remote switch or sensor connected to J4 requires 24 VAC, pin 1 of J4 supplies it. Naturally if the switch does not use 24 VAC (or has its own power supply), the cable plugged into jack J4 would not have a connection to pin 1.

Similarly, pin 2 of J4 is connected to the 5 VDC source as shown. In the case of the pushbutton switch, conductor 36A will connect to pin 2, providing the 5 VDC source

to the pushbutton switch. If the remote switch does not need 5 VDC, the cable plugged into jack J4 would not have a connection to pin 2.

Pin 3 of J4 is a first sensor return. In the case of the pushbutton switch, pin 3 will connect to conductor 36B, providing the 5 VDC return signal. Line 39 connects pin 3 of J4 to pin 2 of jumper JP10.

Pin 4 of J4 is connected to a clock signal from IO9 of the microprocessor. In a pushbutton scenario, a clock signal is not used. But there may be some type of remote sensor that either requires a clocking pulse to tell it when to operate or while it is operating it may need clock pulses. Pin 4 would provide those pulses.

Pin 5 of J4 is a DC ground. In the case of the pushbutton switch, pin 5 will connect to conductor 36C.

Pin 6 of J4 is a second sensor return signal. Again, in the case of a push-button switch, the 5 volt return signal would come in pin 3 and pin 6 would not be used. Pin 6 would be used with an AC return signal. Line 41 connects pin 6 to jumper JP9's pin 2.

The shunt clips of jumpers JP9 and JP10 are set in accordance with the type of remote switch or device connected to jack J4. If the remote switch connected to J4 provides a 5 VDC return on pin 3 of J4, the pins 1 and 2 of JP10 are shorted, as are pins 1 and 2 of JP9. In that case the return signal on pin 3 of J4 goes directly to the input of Schmitt trigger U2A, bypassing the opto-isolator U1A. Also, in the case of a 5 VDC return signal the opto-isolator input pin K,A is grounded through JP9 pins 2 and 1. The reason why this is done is if one side of the opto-isolator is left open it can pick up some noise because it has the ability

to look at alternating current and it takes very little power to trigger it. JP9 forcibly ties it down so it will not operate. In the meantime input A,K of the opto-isolator U1A is just floating freely. So nothing is going into the opto-isolator. Therefore, nothing is going to come out and mess up the signal that is coming around it from JP10.

If the remote switch connected to J4 provides a return on pin 3 of J4 that is anything other than 5 VDC, the pins 2 and 3 of jumper JP10 are shorted, sending the return signal to input A,K of the opto-isolator U1A. The settings of jumper JP9 depend on the power source for the remote switch or device. If the remote device has its own power supply then the shunt clip is left entirely off of jumper JP9. If the remote device uses the 5 VDC power from J4 pin 2, then jumper JP9 is set to pins 1 and 2 to provide a DC ground. If the remote device uses the 24 VAC power from J4 pin 1, then jumper JP9 is set to pins 2 and 3 to provide an AC neutral through line 43.

When the opto-isolator receives an input on its ports A,K and K,A, it sends an infrared signal inside the device. The infrared signal closes an electrical connection between ports C and E. Because an infrared light signal is used internally in the opto-isolator to trigger the output, there is no physical electrical connection between the input side (ports A,K & K,A) and the output side (ports C & E). Thus, whatever pin C is hooked up to will be sent as an output signal, regardless of what input triggered the output. In the present invention port C is hooked up to 5 VDC. So now, no matter what signal arrives on the input side of U1A, the rest of the circuit sees it as a 5 VDC signal on line 38.

The opto-isolator would be used when the 4IO board is looking at a voltage other than 5 VDC or if it looking at a voltage not supplied from the board. For example,

take the case of monitoring a solenoid which operates at 24 VAC. Jumper JP10 is set to pins 2 and 3 and the other jumper JP9 is set at pins 2 and 3 so that same signal can be returned. Thus, the board is monitoring what is on J4 pin 3 but not giving it any power. With this arrangement there is no concern about having a common ground or common power supply; the board is just tapping in to see what is happening with that particular solenoid. When it activates or deactivates then the signal can be modified, whatever it is, to a 5 VDC signal and the processor runs off of this new signal. And then, of course, in software this signal can be controlled to be on or off, or when it should activate depending on when that signal comes in, or if it should activate when the signal comes in.

Now there is a 5 VDC signal on line 38 going into the Schmitt trigger U2A, whether that signal comes from the opto-isolator or through jumper JP10. Because the opto-isolator is picking up AC, it has the ability to generate AC noise on the line. To clean up the 5 volt signal as much as possible there is a filter C4, R11 to help reduce that high frequency noise. The filtered 5 volt signal is sent to the Schmitt trigger U2A which is part of the common circuit.

As in most electronic logic circuits, the 4IO board uses inverted logic. That is, the normal output state is a logic high. In electronics when a line breaks, there is nothing there. Logically that is considered a high by solid state electronics and a microprocessor. Because in the rest of the line, there is always a little bit of trickle back from the components, it will drive a line high. To have a good, definite signal you really want the line to drive low. With a low line it is known that a signal is definitely there; there is no question about whether some voltage is a signal or noise. Accordingly, the Schmitt trigger U2A is an

inverter. What the Schmitt trigger does is take a signal coming in that is variable due to noise and capacitance in the line and when the input signal reaches a certain point, the Schmitt trigger turns on and produces a clean signal out in the form of a square wave. In this case, U2A is an inverting Schmitt trigger so, when the input signal goes high the output is a nice, square wave with logic low. Whatever signal comes in the Schmitt trigger cleans it up and produces the opposite on line 26A for the microprocessor.

Amplifier U5C is involved with driving LED D5. The LED cannot be driven with the same signal sent to the microprocessor, because doing so can draw too much power away and produce a very weird signal. In this case, a low signal is used to indicate that something was occurring. It is desired that the LED D5 turn on to indicate the presence of a signal. Thus, the LED is working in reverse of the logic used by the microprocessor. An amplifier U5C is used to increase the power enough to drive the LED D5 so it turns on when a logic line goes low.

Power for LED D5 is derived from VCC as shown. When line 38 goes high (indicating the presence of a signal), line 40 goes low. Amplifier U5C drives line 42 low. The amplifier U5C just takes whatever signal is on line 40 and gives more power to it. So, in this case, the amplifier is amplifying a logic low so it is forcing line 42 low. The power VCC is coming through the LED D5 and a current limiting resistor R17 to try to bring this line 42 up. But U5C wants to make it low so now you have an electronic battle which will be won by U5C which can sink more than what resistor R17 can supply because it is a current limiting resistor. So there is a current path that flows to the ground of U5C and this turns the LED D5 on.

When line 38 is low (indicating the absence of a return signal), line 40 is high. Then amplifier U5C forces line 42 high. Now there is a high voltage on both sides of LED D5, there is no current path and LED D5 is off.

It will be understood that for clarity only one input jack J4 is shown and described. In actuality the board has a plurality of input jacks identical to J4. In the preferred case there are four, although it could be a different number. Each input jack has the same associated circuit elements as shown for jack J1, i.e., a pair of jumpers, an opto-isolator, a Schmitt trigger, an LED driver and associated components. Thus, input lines labeled J1, J2, J3 in Fig. 3 each connect to the same circuit as shown for input line 26A.

D. Output Section

The output section of the 4IO board faces the same general problem of the input section, namely, a variety of different controlled devices need to be accommodated. A common controlled device will be a solenoid for actuating a water valve on a sink or shower. But the controlled device might also be a solenoid-activated flush valve, a motor for a soap or towel dispenser, or an auxiliary control board for one of these. Different outputs are required for these different devices so provision must be made for supplying and controlling these outputs.

As in the case of the input section, the 4IO board has four RJ-11 style jacks for connection to the controlled devices. One of these jacks is shown at J10, the others being similar. Briefly, pin 1 of each output jack connects to a switched 5 VDC. Pin 2 is connectable to an selectable power source. Pin 3 provides a switched selectable power

source. Pin 4 is not used. Pin 5 is the return for the selectable power. Pin 6 is a DC ground. How these connections are made will now be described.

A latching relay is associated with each output jack. One of these relays connected to jack J10 is shown at K4 The internal circuit of a latching relay is shown in Fig. 9. The relay is a double-pole, double throw device having first and second contacts 44-1 and 44-2. There are also two coils in the relay. Each coil is connected to a power source, at the terminals labeled SET and RESET, and to a ground, labeled GND1 for the SET coil and GND2 for the RESET coil. The contacts 44-1 and 44-2 are pivotably and electrically connected to common pins labeled COM1 and COM2. In what is designated the "normal" or latched condition, the RESET coil is considered the most recently activated coil and the contacts 44-1, 44-2 engage pins NC1 and NC2, respectively, thereby making electrical paths between NC1-COM1 and NC2-COM2. When the SET coil is activated it pulls the contacts 44-1, 44-2 into engagement with pins NO1 and NO2, respectively, thereby making electrical paths between NO1-COM1 and NO2-COM2. There is no spring or other device biasing the contacts 44 one way or the other so the contacts remain in their most recently activated state until the opposite coil activates to move the contacts to the other set of poles.

Returning now to Fig. 2, the connections to one of the latching relays K4 will be described, it being understood that the other relays have the same components connected thereto. The SET and RESET pins are connected to the 9 VDC source on lines 46 and 48, respectively. Pins NC1 and NC2 are not used. COM1 is connected by line 50 to pin 3 of output jack J10. Line 50 is also connected to selectable power line AC4A. COM2 is connected by line 52 to pin 1 of jack J10. Line 52 also branches off to an LED D10 that

turns on when line 52 is active. NO1 is connected by line 54 to pin 3 of jack J10. NO2 is connected to the 5 volt power source VCC. GND1 connects to amplifier U9B through line 56. Line 56 branches to the 9 VDC power supply through diode D26. GND2 similarly connects to amplifier U9A through line 58 which branches to a 9 VDC power supply through diode D25.

The diodes D25 and D26 are there to help with inductive spikes. When there is a relay coil and it is turned on, the 5 volt line will drain so fast through U9A it now will draw as much power as possible. This drops line 58 so low that it could actually be lower than ground. In which case, there would be a current path but since diode D25 is not allowing power to go from +9 VDC to U9A, there will not be any current. But again when you turn the relay off you have an inductive spike going the other way. A low does not hurt the board but a high inductive spike might. In the case of a high inductive spike, a high rush of current is produced. So in this case, it is drained to ground to get rid of it. This helps with inductive spikes created by latching/unlatching of a relay.

The output of the microprocessor comes out of its ports IO0 through IO3 (Fig. 3). Four lines coming out of these ports connect to an addressing chip U10. U10 only allows one output to turn on depending on the combination of lines IO0, IO1 and IO2. IO3 is an enabler. It tells the chip when to work and when not to work. IO0, IO1 and IO2 are going to represent a binary number. That binary number specifies which output to turn on when the chip U10 is enabled by IO3. Only one of the outputs from U10 is going to be activated at a time. Thus, one of the eight amplifiers U9A through U9H (only three of

which are shown) is going to amplify the signal from U10 to allow for a greater current path.

Typically, from U10, a turned "on" output is going to be a logic zero. When it is activated it is a logic zero. Otherwise it's a logic high. The amplifier U9 is going to amplify that. So on all the amplifiers except one there is normally going to be 5 volts coming out of the amplifier. One amplifier is going to have a logic low or logic zero. For example, if amplifier U9A is low, line 58 is pulled low, completing a current path through the reset coil and pin GND2 of relay K4 and causing contacts 44 to close on the NC1 and NC2 pins. The contacts will stay that way even when U9A and GND2 go high and shut off the reset coil. The relay contacts will not move until amplifier U9B goes low, taking line 56 and GND1 low and providing a current path through the set coil. With the set coil active the relay contacts 44 will be thrown to pins NO1 and NO2. With NO1 connected to COM1, the selectable voltage on AC4A and line 50 will be provided to line 54 and pin 3 of jack J10. At the same time the connection of NO2 to COM2 places the 5 VDC source on line 52 and pin 1 of jack J10. Once again the relay contacts will remain in this position even when U9B goes high and removes current from the set coil.

Since only one relay one coil is activated at a time and it is not necessary to maintain the power, the power consumption of the 4IO board is greatly reduced. For example, if the board is controlling a shower and the shower is to be on for 10 minutes, the microprocessor sends a 10 millisecond pulse to unlatch the relay and turn the shower on. The relay is left there. The processor comes back in 10 minutes, looks at its watch and says

when 10 minutes expires, go to the other address to unlatch (reset) this relay and turn the shower off.

The selectable voltage at AC4A is determined by two shunt clips on a jumpers JP6 (Fig.5). Keep in mind that there is one such jumper for each of the four output jacks and each jumper and output jack has its own selectable voltage line ACxA, where "x" can be 1,2,3 or 4. Each jumper, such as JP6 in Fig. 5, has on pin 1 a 24 VAC supply from line 14 of the power supply section 12. Pin 2 connects to line AC4A at line 50. Pin 3 connects to an external power source. Pin 4 is blank. Pin 5 is connected to ground for the external power source. Pin 6 is the return line from AC4B on pin 5 of jack J10 (Fig. 2). And pin 7 is an AC neutral.

The external power source, also referred to as an off-board power source, comes into the 4IO board at jack J5 in Fig. 5. J5 simply provides pins for four external power sources and related grounds therefor. These are connected to pins 3 and 5 of each of the output jumpers JP6. Thus, if a controlled device requires a voltage other than the 24 VAC or 5 VDC available from the 4IO board's power section, that off-board voltage could be supplied to jack J5. One jumper shunt clip on JP6 would be set to pins 2 and 3 so external power would be provided on AC4A and thus on pin 2 of output jack J10. Furthermore, a switched external power would be available on pin 3 of J10. The other jumper shunt clip would be placed on pins 5 and 6 of JP6 to connect AC4B from pin 5 of J10 to external ground at JP6 pin 5.

If the controlled device needs 24 VAC, the jumper JP6 shunt clips are set on pins 1 and 2, and pins 6 and 7. That places 24 VAC on AC4A and AC4B, which in turn are

connected to pins 2 and 5 of output jack J10. Also, a switched version of the 24 VAC source would be available through COM1-NO1, line 54 and pin 3 of J10. If the controlled device needs 5 VDC, that's going to always be available at pin 1 of J10 (when K4 is unlatched), regardless of the jumper JP6 settings.

It will also be noted that if the controlled device has its own power supply but it is desired to switch that power supply (control when the device turns on and off), pins 2 and 3 of J10 could be tapped into the power circuit on the controlled device. Contacts 44-1 at the NO1 and COM1 pins would complete the power circuit when the set coil of relay K4 is activated, Thus, the relay can simply provide a switch closure. In this case the jumper shunt clips would be removed from JP6 so nothing is supplied to AC4A or AC4B.

From the foregoing it can be seen that the microprocessor can control the supply of different on-board voltages, or an-off board voltage or just provide a switch closure to a controlled device.

E. Communications and Utilities

The 4IO board has the ability to communicate through twisted pair lines or a power line. The twisted pair communications module is known as FTT-10A as is shown in Fig. 7. The power line module is indicated as PLT-21 in Fig. 6. These are both stuffing options, whichever one desired can be used. The FTT-10A can be bus or star topology. It is just a matter of the type of communication package desired. Other options such as RS485 might also be used. Both the FTT-10A module and PLT-21 transceiver can be obtained from Echelon Corporation of Palo Alto, California. The communication lines CP1, CP0 and CLK2 of the FTT-10A option and the PLT-21 option extend from the microprocessor to the

communications module. The microprocessor sends out a series of 1's and 0's on each of these lines. The transceiver is really a big transformer, an isolation transformer, and it sends out those same clocking signals in serial fashion on either line Data A or Data B (Fig. 7). The transceiver on the other end looks at the two lines and when a difference is detected then there must be communication. Then the receiver starts looking at the combination of 1's and 0's to determine if it is a valid message or not. This type of transmission is known as Manchester differential encoding. Since signals are sent on Data A or Data B polarity is not a concern. That is, the two wires can be hooked up in either fashion.

The only difference with power line communication is there are more communication lines hooked up and there is a little intelligence in the chip that stores some of the information and then sends it out at a slower rate. But essentially the same type of differential Manchester encoding applies with the power line transceiver. The transmission is slowed down a little bit and also it has the intelligence to look at the power line to see if there is traffic on the line or not.

The other components shown set up the voltage that is used for the comparison by the transceiver. An inductor helps reduce noise spikes and things like that and it is just cleaning up the communication on a line.

Returning to Fig. 3, the 4IO board has a reset switch SW1. If something goes drastically wrong or it is desired to start from a known beginning the reset switch is pressed. It tells the processor forget whatever you're doing, start from scratch. Start from the very beginning of your program. It does not affect the EE section of the microprocessor. It only

tells the processor to stop what you're doing and start from the very first step of your program. That first step may be to turn all the relays off as a safety precaution.

U11 is a chip that makes sure that the voltage is maintained. U11 is a chip that acts like a watchdog for the 5 VDC power. It makes sure that the 5 VDC does not drop below 4.3 volts. It is a security measure to make sure that the processor does not produce errors due to low voltage. When the 5 VDC line drops below 4.3 volts U11 will automatically tell the processor to reset. U11 will keep sending that signal until the 5 VDC line is back above 4.3 volts. This chip reset does the exact same thing as the push button reset SW1. It just tells the processor to start from the beginning. As long as that reset is held low, the processor is not going to work. It will be in continual reset. If a processor is allowed to free wheel or work on its own when the power drops below 3.8 or 3.7 volts, it does not have enough power to latch information into its memory so there may be some old information, some new information, or a combination of old and new information. The processor is trying to operate but the data is completely unreliable. You just do not know what is in the processor's memory. U11 protects against that happening.

The service switch SW2 is a special switch typically used in a communication format. When the service switch is pressed it invokes a special routine in the processor. It tells the processor to send out its unique neuron ID number and to identify itself with that unique neuron ID number. So it will make a message that says this is my unique neuron ID number and it will throw it out on the communication line. That's what that service switch does. Also embedded in the software there is the ability through a combination of reset and the service switch to go into what is called an unconfigured state. Typically that is used

when something is going very wrong or something needs to be changed drastically or you need this board not to work for some reason. You can force the board not to work by going into an unconfigured state. That is usually used as a diagnostic tool or if new information is going to be downloaded that will take a long time.

J6 in Fig. 3 provides some extra input output points that can be configured through programming to do pretty much whatever is needed. Since they are not used in the circuit they were brought out to a header with a 5 VDC power and 5 VDC ground so this can be used at a future date. In most cases it is not being used. It is for future expansion. In the case of the Smart Sink there is another board attached to J6 that has three pushbuttons. Those three pushbuttons interact with the software to talk to another display to change parameters just like would be done through a personal computer.

The 4IO board has a ground shield to eliminate radio emissions from going in and out of the board. Internally there is foil that goes around the entire board except where the traces go through. That acts as a shield to help prevent radio emissions from affecting the data lines externally because we have all these 1s and 0s running back and forth. Naturally, that's going to cause noise. To prevent it from radiating out to the world, an earth ground shield is embedded in the board. That noise will tend to go to that earth ground shield. So, the noise that we generate from our board is going to be drained to ground and the noise from the outside world is going to be drained to ground by the same shield.

F. 4IO Software

The software for use on the 4IO board is stored on the EPROM U3 and runs on the microprocessor U12. Figs. 10 and 11 illustrate a flowchart for a preferred general program for use with a variety of plumbing fixtures. The flowchart only shows the program steps for a single input and output channel; it will be understood that the steps for the other channels are similar.

The program begins at 55 by initializing a set of parameters for each particular input and output channel. The parameters include:

Valid target time - this is the length of time an input signal must be present before the computer recognizes it as a valid input. While the term "target" envisions an infrared sensor as the activating device on the fixture, it also is meant to encompass the actuation of a pushbutton switch or the like.

Activation type - this tells the computer whether it should act on a valid target signal when the signal appears or after the signal disappears. This is to accommodate fixtures such as water closets that should not be activated until a target, i.e., the user, leaves the fixture.

Delay before on time - this is the length of time the computer should wait before activating an output after a valid target is seen and the appropriate activation type is allowed for.

On time - the length of time the computer should allow activation of the fixture. As explained above since the latching relays are used to control the outputs, the on time is not synonymous with the actual pulse length from the computer, which is very short. But if left unlatched the relay can be allowed to provide an output for a long time.

Delay after on time - this is the length of time, after activation of the fixture, during which further inputs are ignored. This is to give the fixture time to carry out its operation. Most commonly this will be used with a water closet where it may take ten seconds or so to complete a flush. During that time you don't want a new flush request to interrupt an incomplete prior flush. So the delay after on time is used to suppress new inputs following too closely on a previous one.

Target count limit - in certain situations it is necessary to limit the number of fixture operations within a certain window of time. For example, if a request for flushing a water closet in a prison cell is received more than twice in a five minute span it is likely that an inmate is up to some mischief by issuing repeated flush requests, i.e., hitting the flush button over and over. The target count limit sets the maximum number of times a request will be accepted within the window.

Window time - this is the length of time associated with the count limit just described. When a first request is received a window timer is started and a target count kept and checked to see if it exceeds the specified limit. In the embodiment shown there is only one window timer and it is not reset until it times out. Alternately there could be multiple window timers with each target starting an additional window so that the target limit is never exceeded in any time frame, not just the one kept by a first timer. Another way of handling the issue of multiple targets spanning the end of a first window is to randomize the on delay and off delay times. A longer off delay has somewhat the same effect as multiple time windows.

Lockout time - the length of time an output is shut down if the target count limit is violated. During the lockout time the computer will acknowledge no inputs and provide no outputs. If the 4IO board is part of a PWT network the violation is reported to the central computer.

User shut off permission - this parameter governs whether a second switch or sensor activation by a user will turn off the fixture prior to its run time limit. For example, can the user turn off the shower before the ten minute time limit.

Randomize delays - this tells the computer whether it should use fixed on/off delays or generate delays of random length.

Target count - this is the number of times that the pushbutton switch or infrared sensor on a fixture has been actuated by a user. It is ignored if a lockout is not used. It is initialized at zero, incremented by each valid target and reset to one when the window timer times out and to zero when the lockout timer times out.

Returning now to Figs. 10 and 11, after initialization and junction point A, the computer proceeds to monitor the input line for a target at 57. When a target is seen (i.e., a pushbutton is pressed or an infrared sensor is tripped), the computer waits at step 59 to see if the target remains for the specified valid target time before recognizing the target as valid. Once a valid target is found the computer checks at 60 to see if target count limits are imposed on this channel. If not it proceeds to junction point B, with subsequent actions explained momentarily. If count limits are in effect, the target count in incremented at 62 and checked at 64. If this is a first target (i.e., we are not presently in a window period), the window timer is started, 66, and the computer goes to junction B. If this is not a first target,

the computer checks at 68 to see if the previously set window has expired. If it has, a new window is started and the target count is reset to one, as at 70. If the window is still in effect, the target count is compared to the limit at 72. If the limit has not been exceeded we go to junction B. But if the target count limit has been exceeded, the computer shuts down operation of both the input and output on this channel, starts a lockout timer, resets the window timer and resets the target count, 74. Operation will resume only after the lockout timer times out.

Following junction B, the computer checks if it is ok to actuate the fixture upon presence of the user or if it is to wait until the user leaves the fixture, 76. If this parameter is set to "Leaving" the computer waits at 78 until the target is no longer seen. Next the computer checks if there is an on delay, 80. If there is an on delay, the computer checks to see if it a random delay, 82. If so the computer determines a random delay at 84, otherwise it uses the specified fixed delay to wait, 86, prior to activating the output. Activation at step 88 involves a pulse to the appropriate latching relay and starting an on timer. During the run or on time, the computer will check at 90 if the user has shut off permission. If so, the computer will look for a valid target or switch activation, 92, and shut off the output if it finds one. Otherwise the computer simply watches the on timer at 94. With either expiration of the on timer or a valid shut off request, the computer turns off the output and resets the on timer, 96.

The computer next determines if there is an off delay, 98. If so, any new pushbutton or sensor activations by the user are ignored during the off delay time, 99. The

off delay may be either fixed or random as previously determined. Finally, the computer then returns to junction point A and starts watching for the next target.

It can be seen that the basic control logic for an output is delay-activate-delay within imposed cycle limits. This basic logic suffices for a wide variety of applications but obviously it could be changed through new software in the EPROM. For illustrative purposes only, a specific example of the parameter settings in shown in the following table. This example assumes the 4IO board is connected to combination fixture having a sink with hot and cold water on IO channels one and two, a water closet on IO channel three and a shower on IO channel four.

	Hot Water	Cold Water	Water Closet	Shower
Parameter:	1	2	3	4
Valid target time (millisecs)	100	100	100	1000
Activation on present or leave	P	P	L	P
Delay before on (seconds)	0	0	2	0
On time (seconds)	20	10	3	600
Delay after on (seconds)	0	0	120	0
Cycle count limit	NO	NO	2	NO
Window time (seconds)	0	0	300	0
Lockout time (seconds)	0	0	1800	0
User shut off permission?	YES	YES	NO	YES
Randomize delays?	NO	NO	YES	NO

It can be seen with the above setting the hot, cold and shower water will be supplied without delays or cycle limits and the user can shut them off. The water closet,

however, can only be actuated twice in five minutes and randomized delays will be supplied both before and after activation, thus giving the flush valve time to operate.

II. Smart Sink

A traditional hand washing apparatus will not always assure that a proper hand washing sequence has been conducted. To activate the traditional apparatus, the user will be required to physically touch the fixtures at each station of the apparatus, such as the faucet handle, soap dispenser lever or paper towel dispenser handle. These fixtures might contain contaminants which can be transferred to the user's hands. In addition, the careless user might skip a step in the hand washing process or conduct a step improperly to obtain proper hygiene, such as obtaining little or no soap, or allowing an insufficient scrubbing time period.

The use of a programmed washing device was taught by Griffin, U.S. Patent No. 3,639,920. Griffin taught the use of a continuously sequenced washing device in which water is discharged for a predetermined interval, after which the water will be turned off and the soap will be dispensed for another predetermined interval. This is followed by a predetermined pause during which neither soap nor water is dispensed. Thereafter, the flow of water is reinstated and the flow continues until the user departs from the plumbing fixture.

While a continuously sequenced washing device assures every step of the washing cycle is conducted, the inflexibility of a continuously sequenced washing device creates some additional problems. The user is only allowed usage for a predetermined time interval at each station. A user desiring a more extensive hand washing procedure is not

allowed the flexibility to remain at any one station for a longer period of time than the predetermined time. Hence, a user requiring more soap during the scrubbing period to conduct a proper hand washing will not be allowed to do so. This inflexibility prevents assurance that a proper scrubbing procedure was conducted. In addition, a continuously sequenced washing device does not allow the user to use only one particular station or vary the time interval to better suit the particular situation.

The present invention overcomes the problems described above by using a separate sensor for each of the three units in the apparatus, namely, the faucet, soap dispenser and paper towel dispenser. Each of these sensors are connected to the 4IO board. The 4IO board can operate in either in a smart mode or a random mode. The user may be provided with the option of selecting the mode of operation through the use of a menu select switch. The user may also have access to an override switch that bypasses the 4IO board and turns the faucet on.

The smart mode allows a flexible, sequenced hand washing cycle. In the smart mode, a proper hand washing procedure comprises a hand wetting interval, then a dispensing of soap followed by a scrub time interval, then a rinse time interval followed by a dryer activation and, optionally, an output that verifies completion of a proper hand washing sequence. The time for the scrub time interval can be preprogrammed to suit the particular situation necessary for obtaining a proper wash. During this scrubbing period, the user will not be able to obtain water for rinsing off the soap, hence, assuring that the user will not be able to continue without conducting a proper scrub. Since separate sensors are used for each station, the user is able to control the length of the wetting and rinse intervals, as well as the

number of dryer activations. Thus, the user can obtain additional water (during wetting or rinse only), soap or paper towel if additional water, soap or paper towel are desired by the user. What the user cannot do is shorten the scrub time and still obtain verification of a proper wash sequence.

In smart mode the paper towel dispenser sensor is always active so paper towel is always available. Also, if available, the override switch could be used to force the faucet on for rinsing. Should the user have an urgent need to interrupt the hand washing procedure, the smart mode will allow the user to immediately dry his or her hands. Obtaining paper towel out of sequence or activating the override will preclude issuance of a verification of a proper wash sequence but it will permit a user to meet an emergency without soap covered hands.

To assist the user in the sequence of steps to be taken for obtaining a proper hand wash, a display board is used to instruct the user in the proper operation of the sink. The display board is connected to the 4IO board via a communication link.

When the user wishes to use one of the washing stations independently from the other stations, the user can select a random mode. In the random mode, each sensor is active to allow each unit to be used separately, without interaction among the stations.

The 4IO board will also have the ability to monitor the number of times the faucet, soap dispenser and paper towel dispenser was activated and, if desired, by whom. This data can then be retrieved and logged to a central computer. It will be understood that the software used by a 4IO board connected to a Smart Sink is different from that shown in Figs. 10 and 11.

Turning now to the details of the Smart Sink hand washing apparatus, it comprises a wash basin (not shown) with a faucet mounted thereon. Adjacent the basin are a soap dispenser and a towel dispenser, both motor-driven to provide soap and towels at the appropriate time. Each of the faucet and soap and towel dispensers has a sensor associated therewith. A VFD/LCD display is placed near the sink at a height where it will be easy to read.

Referring to Fig. 12, one electromechanical solenoid valve 152 is mounted in the water supply line, after a pre-mixing device or back check valves, to control the flow of water to the faucet. The valve 152 is off (closed) when no power is supplied to it and on (open) when power is supplied to it. A faucet sensor 150 is mounted in the vicinity of the faucet. A common arrangement is to have an infrared emitter mounted in the neck or base of the faucet and aimed at a point underneath the faucet outlet. An infrared detector is located adjacent the emitter.

A faucet control board 148 contains a power supply, IR filter, signal conditioner, and output driver. The board 148 also has a 24 VAC input from power supply 140. Power supply 140 is a transformer for converting the line power 120 VAC to 24 VAC. Faucet control board 148 generates a continuous pulse signal and sends it to the faucet sensor 150. The emitter receives the pulse signal from the faucet control board 148, and sends an infrared signal out to its target zone. When a user places his or her hands underneath the faucet, and therefore in the target zone of the emitter, infrared light will be reflected off the hands to the detector, thereby triggering a return signal to the faucet control board, which processes the signal to determine if it is a valid target. If so, the target is reported to the

WE CLAIM:

We claim:

1. A method of assuring proper hand washing procedure utilizing a faucet, soap dispenser, a dryer means for drying hands, and separate sensors for detecting hands in proximity to each of the faucet, soap dispenser and dryer means, comprising the steps of:

a) opening the faucet to discharge water while the faucet sensor is triggered during a wetting time interval;

b) thereafter dispensing soap when the soap dispenser sensor is triggered;

c) thereafter disabling the faucet to prevent discharge of water during a scrub time interval, while maintaining operability of the soap dispenser during the scrub time interval; and

d) subsequent to the scrub time interval enabling the faucet such that the faucet can discharge water while the faucet sensor is triggered during a rinse time interval.

2. The method of claim 1 further comprising the step of restarting the scrub interval if the soap dispenser is triggered during the scrub interval.

3. The method of claim 1 further comprising the step of activating the dryer means after the rinse interval.

4. The method of claim 1 further comprising the step of maintaining operability of the dryer means at all times.

5. The method of claim 1 further comprising the steps of providing a message board and displaying a different message for each of steps a) - d).

6. The method of claim 1 further comprising the step of providing a verification output when a proper hand washing procedure has occurred.

7. The method of claim 6 further comprising the step of maintaining operability of the dryer means at all times but activation of the dryer means prior to completion of the scrub time interval will prevent provision of said verification output.

8. The method of claim 1 further comprising the step of indicating the end of the scrub time interval by briefly turning the faucet on and off at least once.

9. The method of claim 1 further comprising the step of logging the number of times said faucet, said soap dispenser and said dryer means have been used.

10. A hand washing apparatus, comprising a faucet for discharging water, a soap dispenser for dispensing soap, a dryer means for drying hands, a first sensor for detecting hands under the faucet, a second sensor for detecting hands under said soap dispenser, a third sensor for detecting hands proximate to the dryer means, a programmable computer controller operatively connected to said faucet, soap dispenser, dryer means, and said first, second and third sensors, and a mode selection switch for selecting a smart mode or a

random mode of operation such that when the smart mode is selected the computer causes the apparatus to operate in a sequenced hand washing cycle while in the random mode the faucet, soap dispenser and dryer means are each under the control of their respective sensors, independently of one another.

11. The apparatus of claim 10 further comprising a message board operatively connected to said computer.

12. The apparatus of claim 10 wherein said dryer means is a paper towel dispenser.

13. The apparatus of claim 10 further comprising an override switch for turning the faucet on regardless of the status of the computer.

14. In a hand washing apparatus comprising a faucet for discharging water, a soap dispenser for dispensing soap, a dryer means for drying hands, a first sensor for detecting hands under the faucet, a second sensor for detecting hands under said soap dispenser, a third sensor for detecting hands proximate to the dryer means, and a programmable computer controller operatively connected to said faucet, soap dispenser, dryer means, and said first, second and third sensors, a method of assuring a proper hand washing sequence comprising the steps of:

discharging water from the faucet during a user-determined wetting time interval;

dispensing soap when said soap dispenser sensor is triggered;

disabling the faucet sensor during a predetermined scrub time interval;

thereafter discharging water from the faucet during a user-determined rinse time interval; and

operating said hand dryer means at the end of the rinse time interval.

15. The method of claim 14 further comprising the steps of while maintaining operability of the soap dispenser during the scrub time interval and restarting the scrub time interval if the soap dispenser is triggered during the scrub time interval.

16. The method of claim 14 further comprising the step of maintaining operability of the dryer means at all times.

17. The method of claim 14 further comprising the steps of providing a message board and displaying a different message for each of the steps.

18. The method of claim 14 further comprising the step of providing a verification output when a proper hand washing sequence has occurred.

19. The method of claim 18 further comprising the step of maintaining operability of the dryer means at all times but activation of the dryer means prior to completion of the scrub time interval will prevent provision of said verification output.

20. The method of claim 14 further comprising the step of indicating the end of the scrub time interval by briefly turning the faucet on and off at least once.

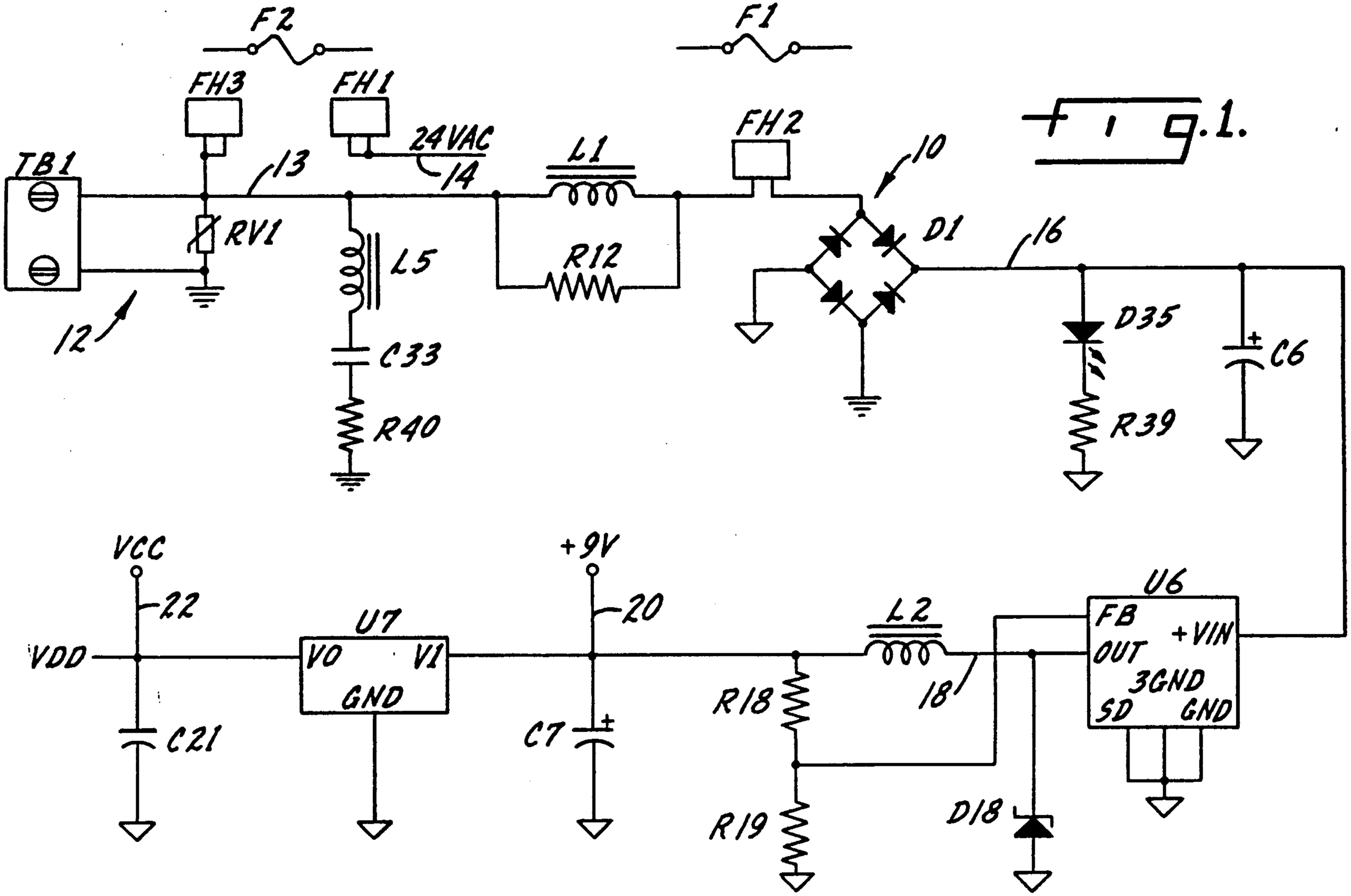
F2
F1
FH3
FH1
24VAC
14
L1
FH2
10
TB1
13
RV1
L5
R12
D1
16
12
C33
D35
C6
R40
R39
VCC
+9V
22
20
U6
U7
L2
FB
+VIN
VDD
VO
V1
OUT
3GND
GND
R18
18
SD
GND
C21
C7
R19
D18

Fig.1.

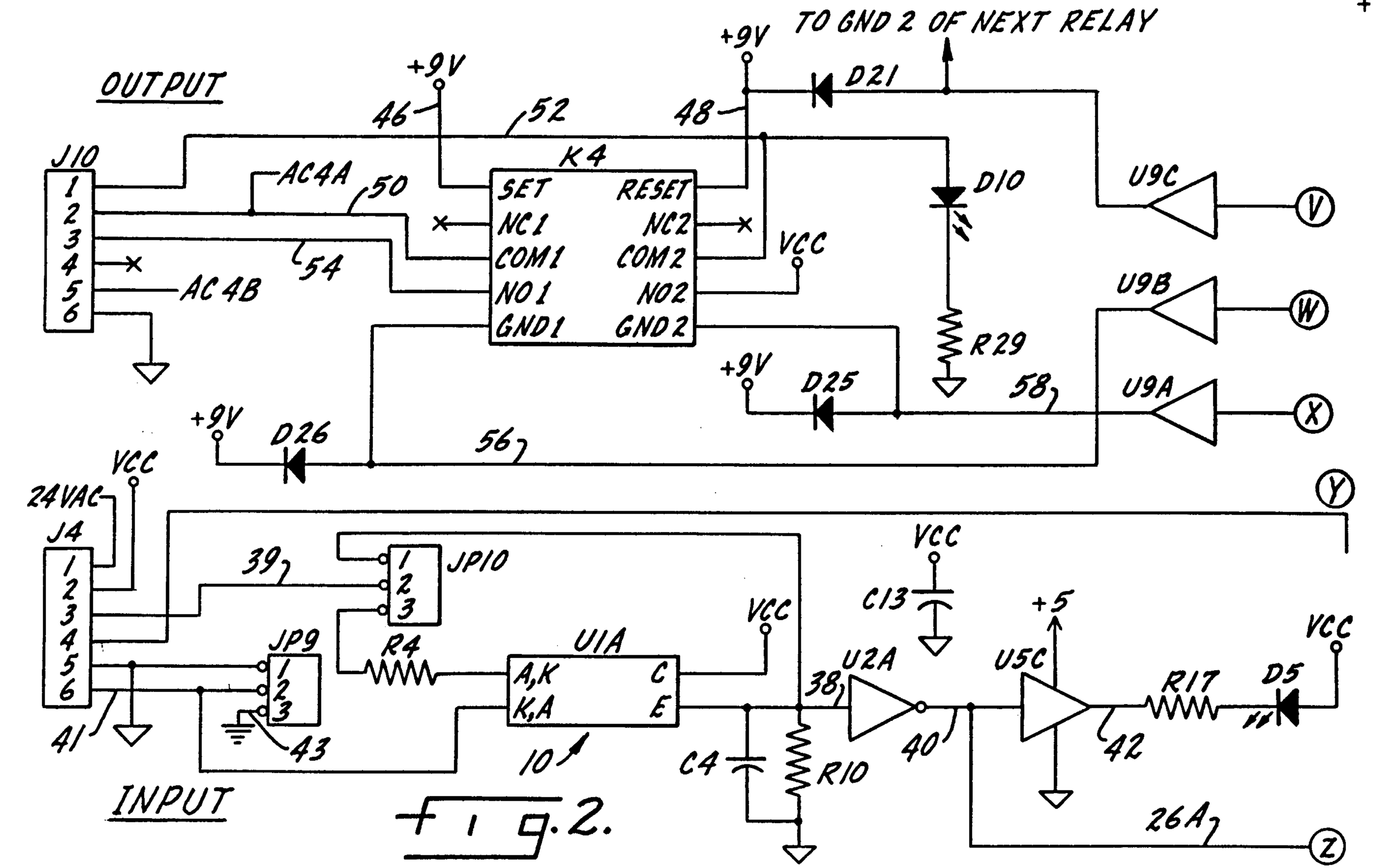
OUTPUT
INPUT
J10
1
2
3
4
5
6
AC4A
AC4B
50
54
46
52
48
+9V
K4
SET
NC1
COM1
NO1
GND1
RESET
NC2
COM2
NO2
GND2
VCC
TO GND 2 OF NEXT RELAY
D21
D10
R29
D25
D26
58
56
U9C
U9B
U9A
V
W
X
Y
Z
24VAC
J4
39
JP10
JP9
R4
U1A
A,K
K,A
C
E
41
43
10
C4
R10
38
U2A
40
C13
+5
U5C
42
R17
D5
26A

Fig. 2.

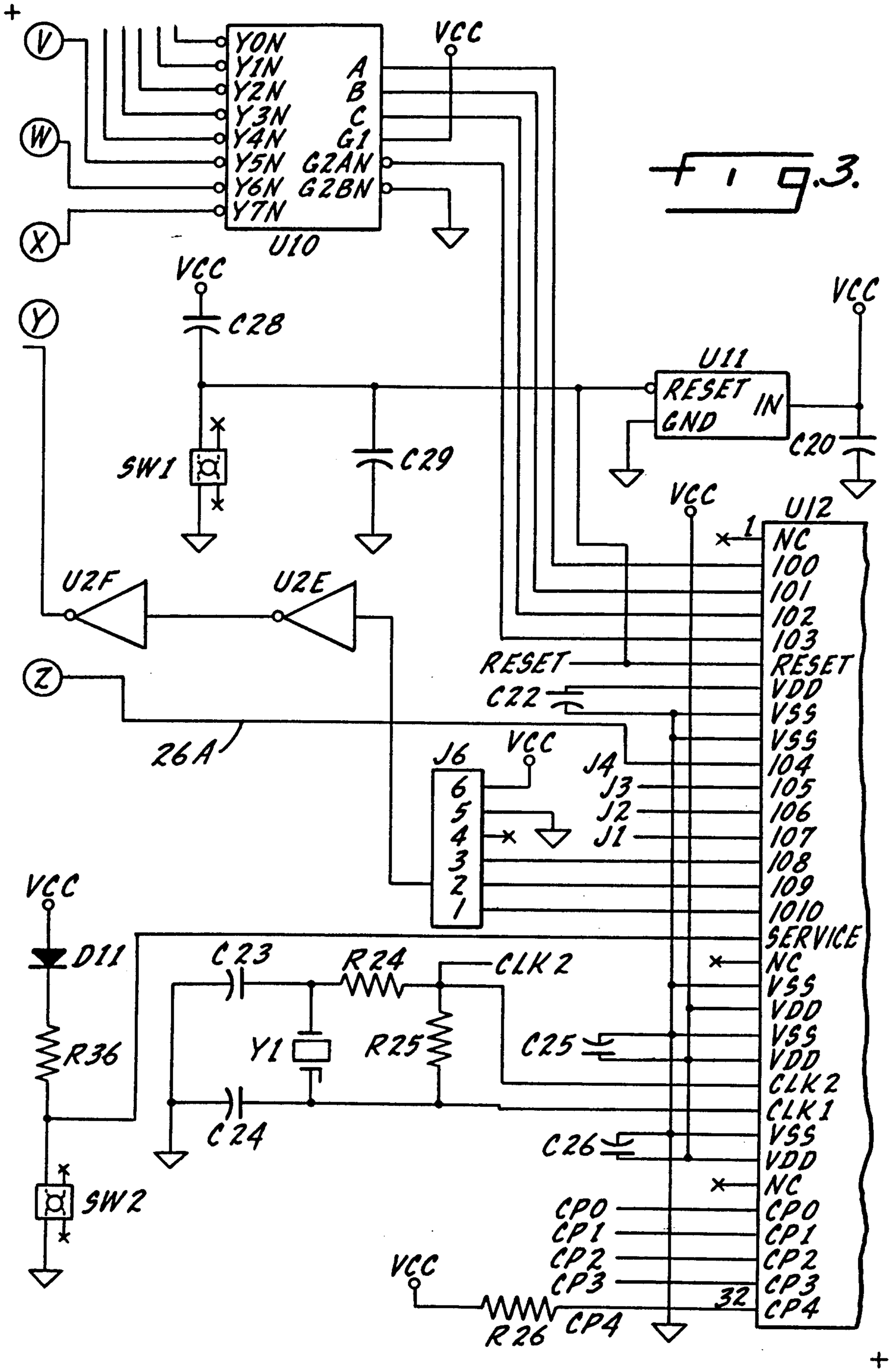
+
V
W
X
Y
Z
Y0N
Y1N
Y2N
Y3N
Y4N
Y5N
Y6N
Y7N
A
B
C
G1
G2AN
G2BN
U10
VCC
C28
C29
SW1
U2F
U2E
26A
U11
RESET
GND
IN
C20
U12
1
NC
100
101
102
103
RESET
VDD
VSS
104
105
106
107
108
109
1010
SERVICE
C22
J6
J4
J3
J2
J1
D11
R36
C23
R24
CLK2
Y1
R25
C25
C24
SW2
C26
CP0
CP1
CP2
CP3
CP4
32
R26
+

Fig. 3.

fig.4.

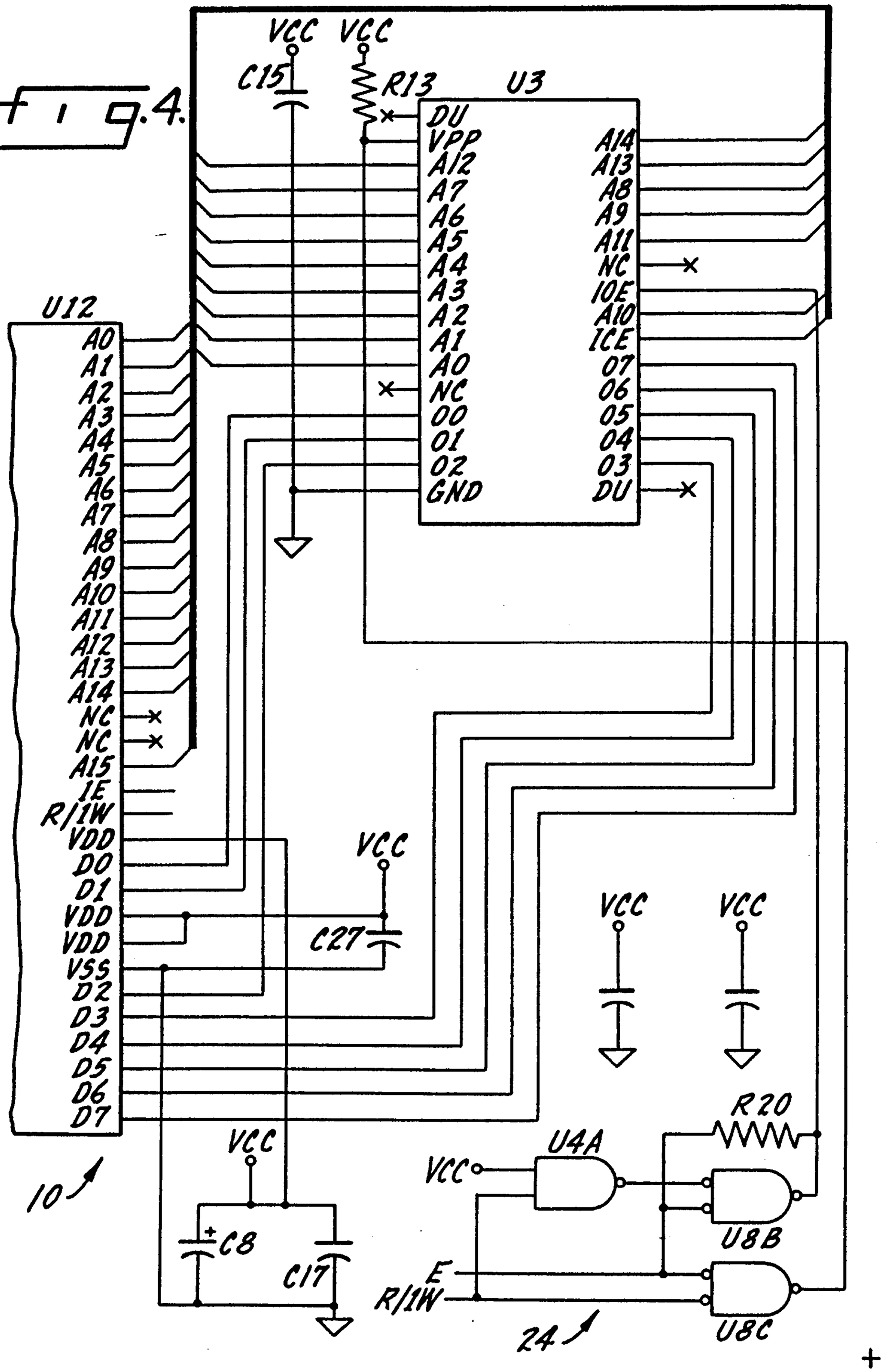
VCC
VCC
C15
R13
U3
DU
VPP
A12
A7
A6
A5
A4
A3
A2
A1
A0
NC
O0
O1
O2
GND
A14
A13
A8
A9
A11
NC
OE
A10
CE
O7
O6
O5
O4
O3
DU
U12
A0
A1
A2
A3
A4
A5
A6
A7
A8
A9
A10
A11
A12
A13
A14
NC
NC
A15
1E
R/1W
VDD
DO
D1
VDD
VDD
VSS
D2
D3
D4
D5
D6
D7
VCC
C27
VCC
VCC
VCC
C8
C17
U4A
R20
U8B
U8C
E
R/1W
10
24

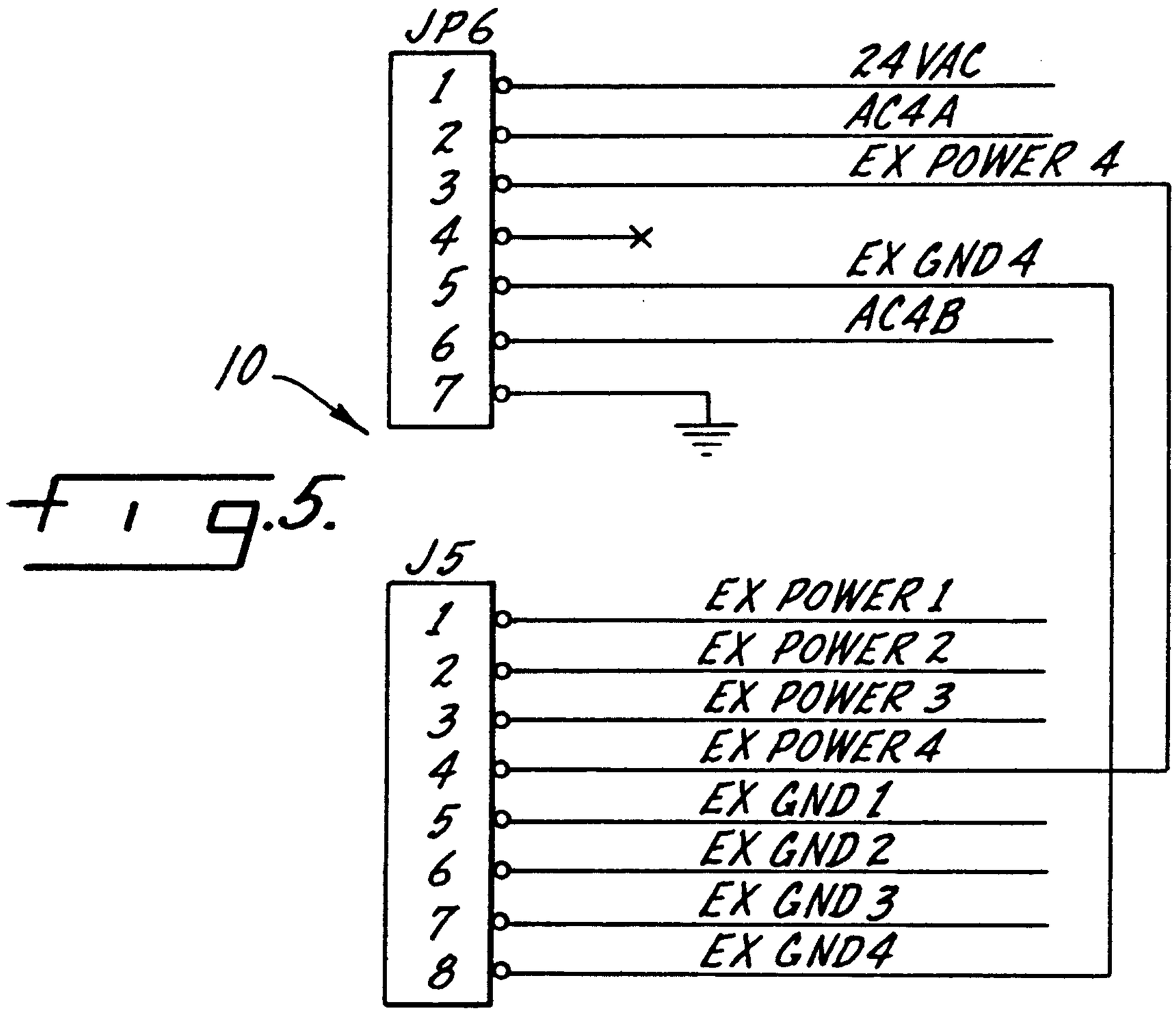
JP6
1
2
3
4
5
6
7
10
24VAC
AC4A
EX POWER 4
EX GND 4
AC4B
J5
1
2
3
4
5
6
7
8
EX POWER 1
EX POWER 2
EX POWER 3
EX POWER 4
EX GND 1
EX GND 2
EX GND 3
EX GND4

Fig. 5.

Fig. 6.

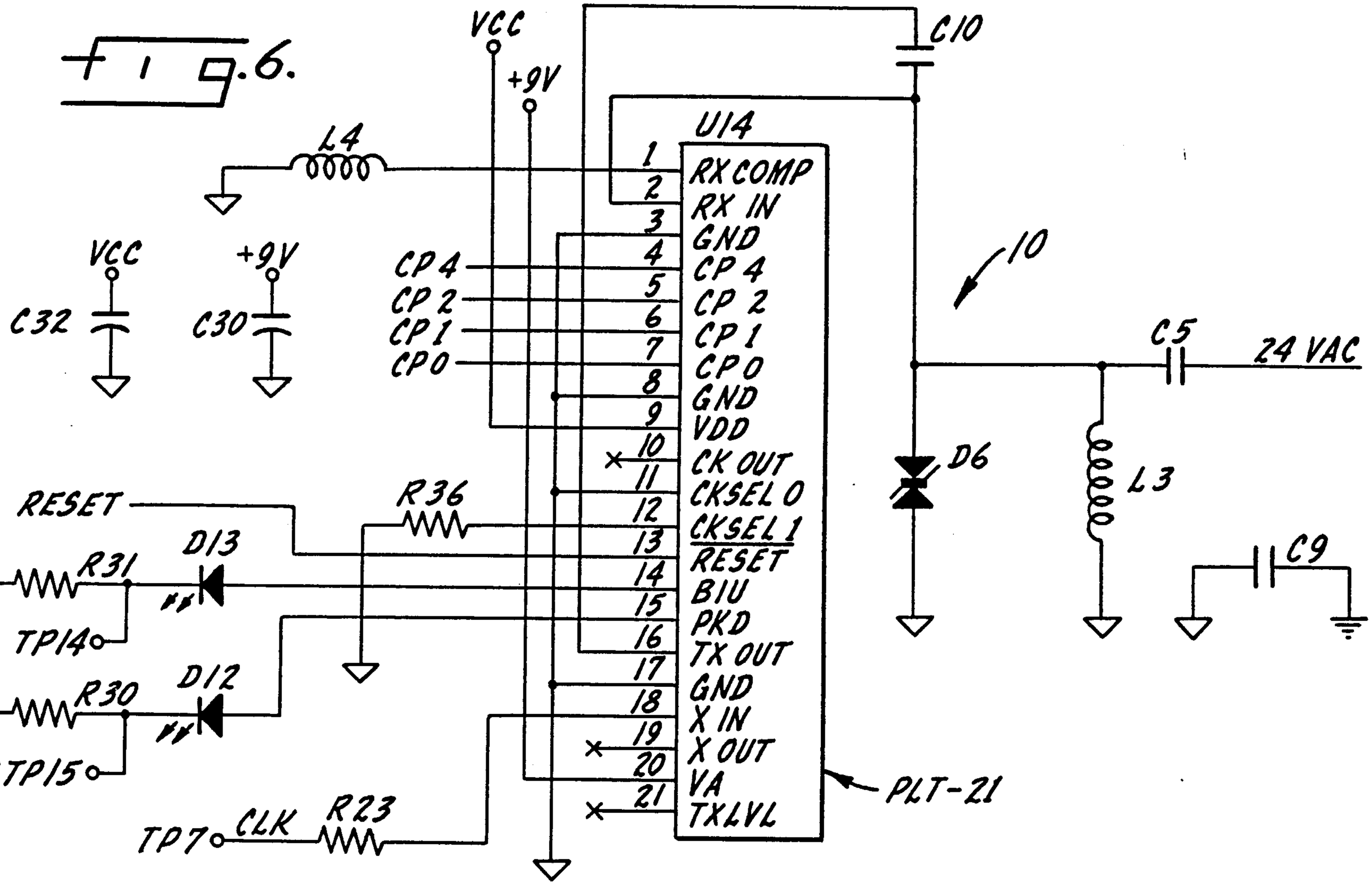
VCC
+9V
C10
U14
L4
1 RX COMP
2 RX IN
3 GND
4 CP 4
5 CP 2
6 CP 1
7 CP 0
8 GND
9 VDD
10 CK OUT
11 CKSEL 0
12 CKSEL 1
13 RESET
14 BIU
15 PKD
16 TX OUT
17 GND
18 X IN
19 X OUT
20 VA
21 TXLVL
10
C5
24 VAC
D6
L3
C9
PLT-21
VCC
+9V
C32
C30
CP 4
CP 2
CP 1
CP 0
RESET
R36
D13
R31
TP14
D12
R30
TP15
TP7
CLK
R23

Fig. 7.

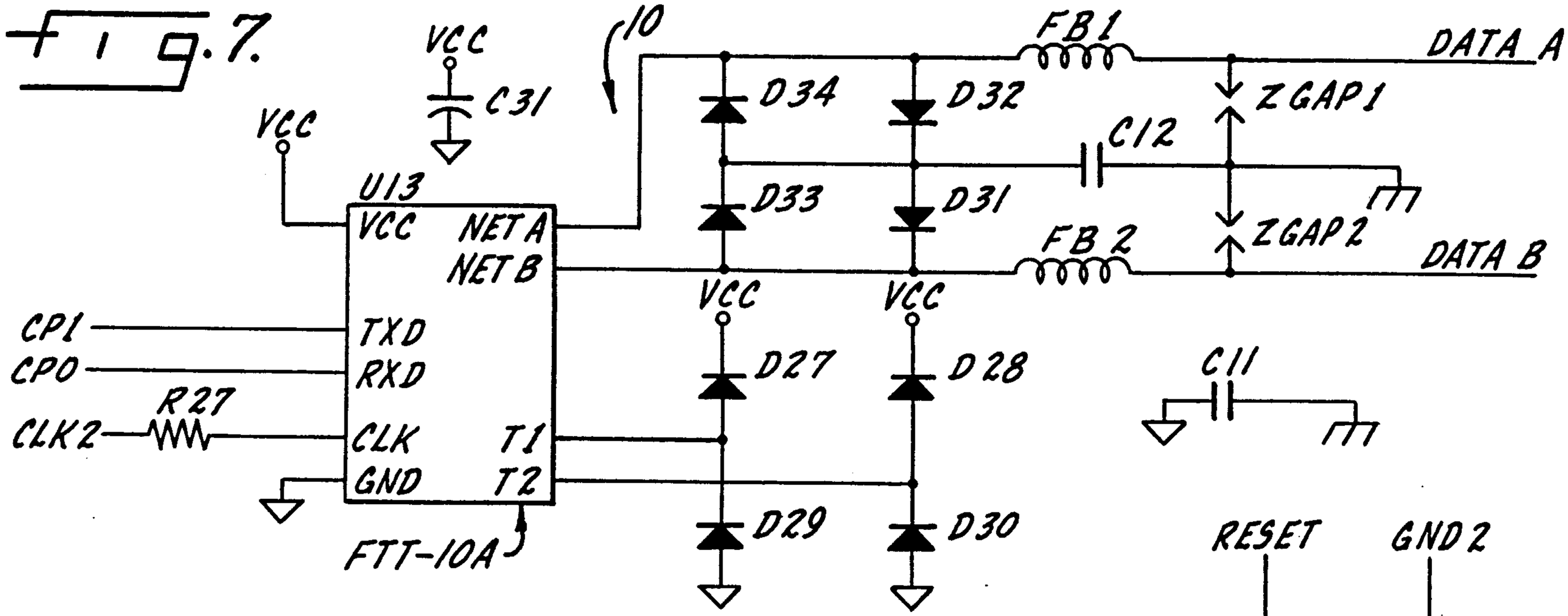

Fig. 8.

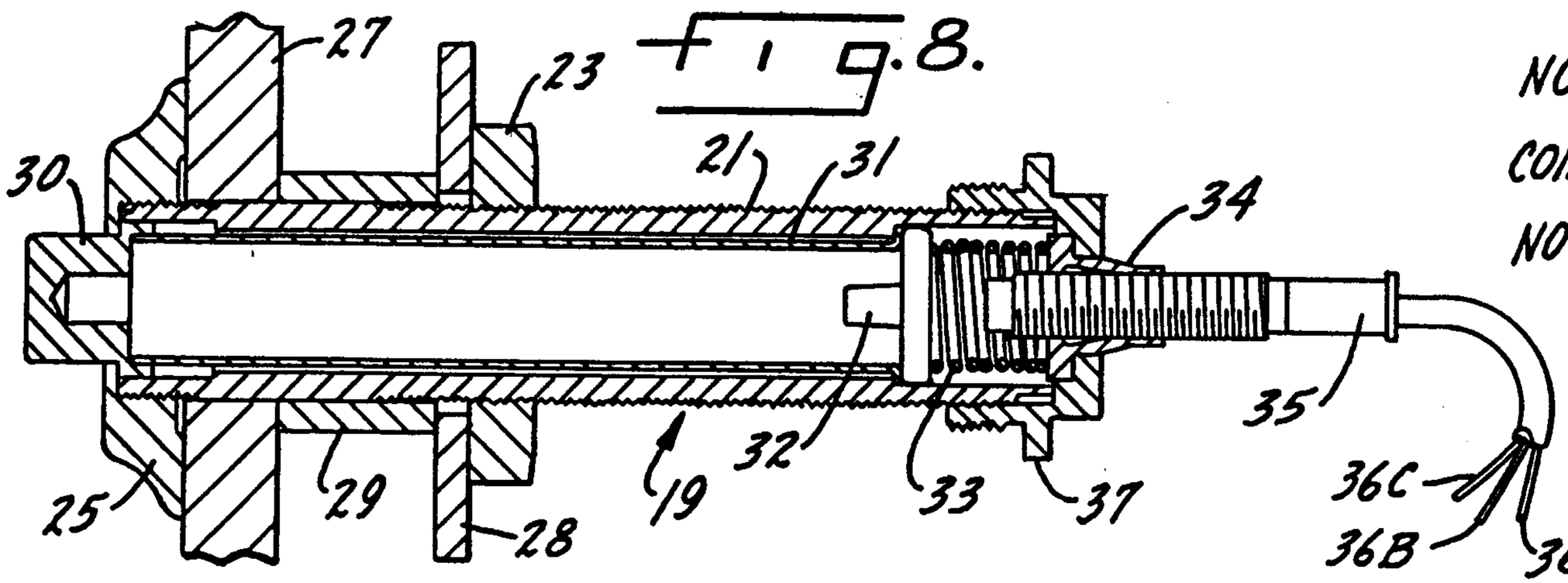

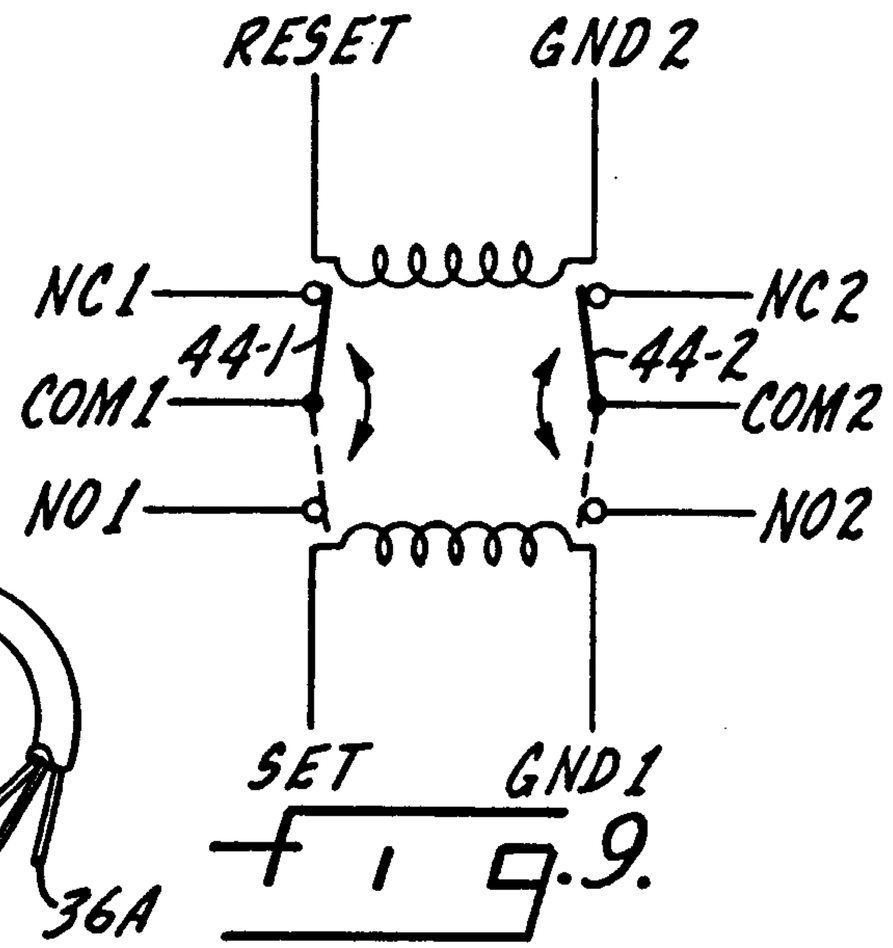

Fig. 9.

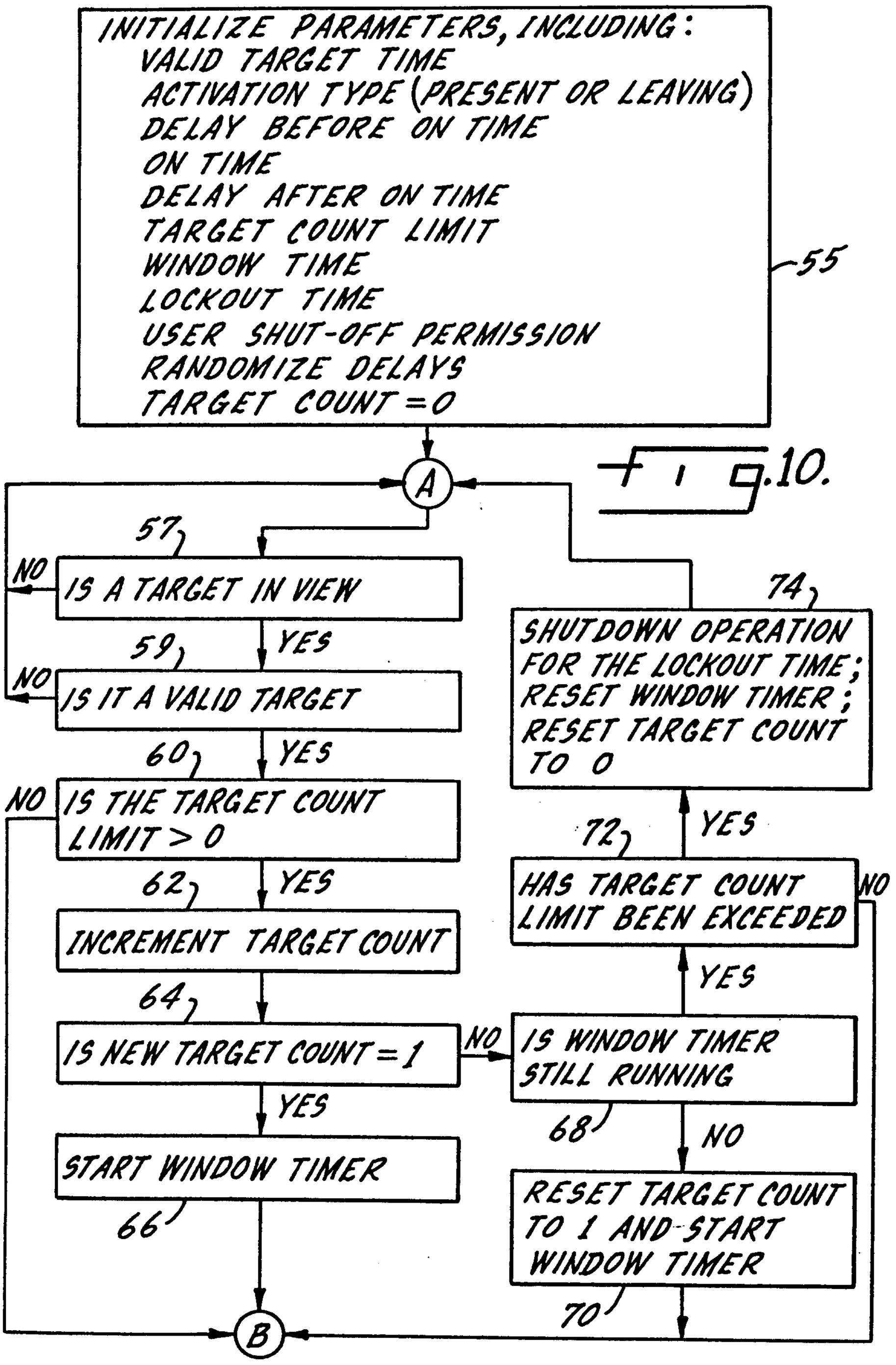
INITIALIZE PARAMETERS, INCLUDING:
VALID TARGET TIME
ACTIVATION TYPE (PRESENT OR LEAVING)
DELAY BEFORE ON TIME
ON TIME
DELAY AFTER ON TIME
TARGET COUNT LIMIT
WINDOW TIME
LOCKOUT TIME
USER SHUT-OFF PERMISSION
RANDOMIZE DELAYS
TARGET COUNT = 0
55
A
57
NO
IS A TARGET IN VIEW
YES
59
NO
IS IT A VALID TARGET
YES
60
NO
IS THE TARGET COUNT LIMIT > 0
YES
62
INCREMENT TARGET COUNT
64
IS NEW TARGET COUNT = 1
NO
YES
START WINDOW TIMER
66
B
74
SHUTDOWN OPERATION FOR THE LOCKOUT TIME; RESET WINDOW TIMER; RESET TARGET COUNT TO 0
YES
72
HAS TARGET COUNT LIMIT BEEN EXCEEDED
NO
YES
IS WINDOW TIMER STILL RUNNING
68
NO
RESET TARGET COUNT TO 1 AND START WINDOW TIMER
70

Fig. 10.

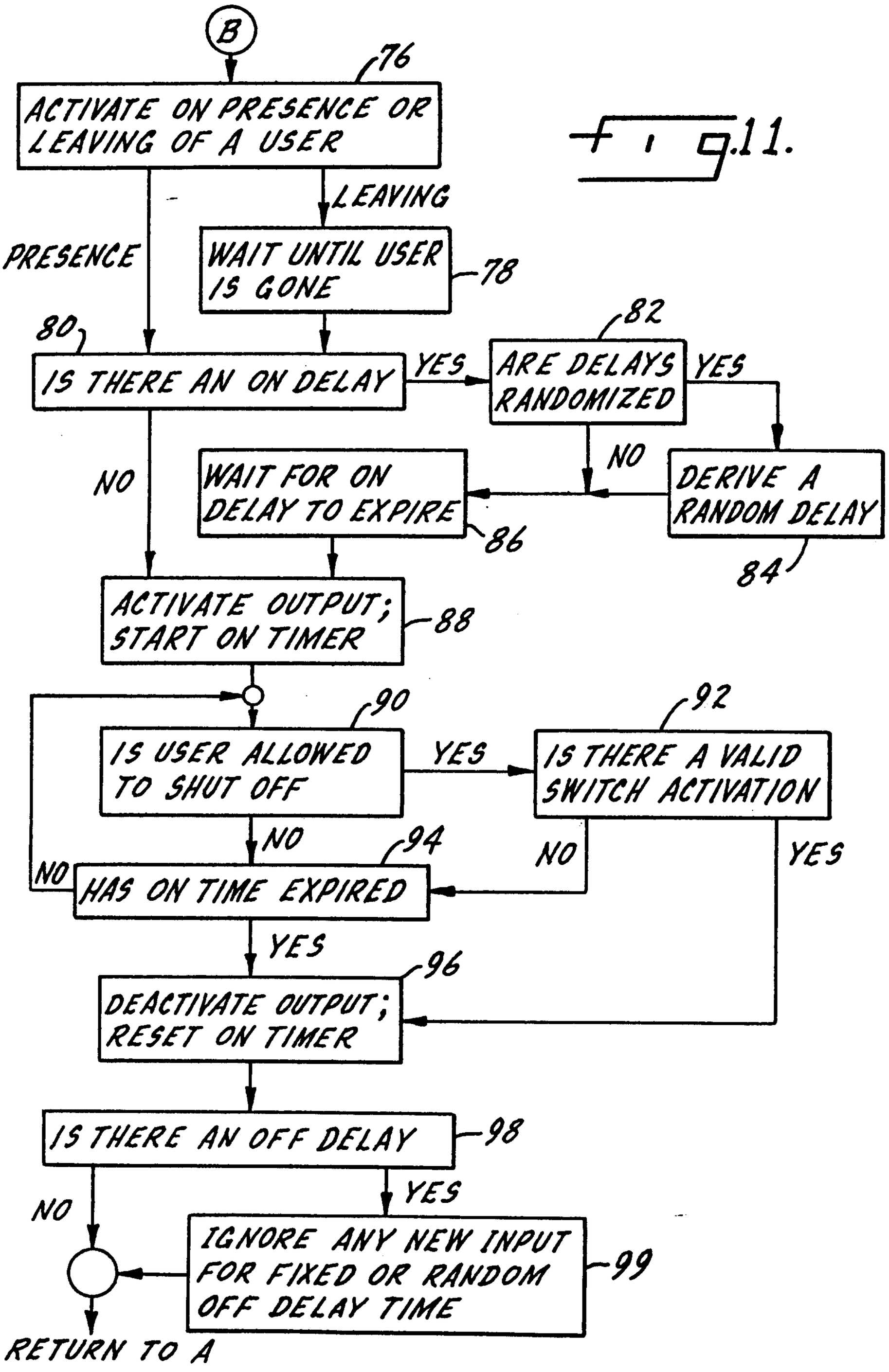
B
76
ACTIVATE ON PRESENCE OR LEAVING OF A USER
LEAVING
PRESENCE
WAIT UNTIL USER IS GONE
78
80
IS THERE AN ON DELAY
YES
82
ARE DELAYS RANDOMIZED
YES
NO
WAIT FOR ON DELAY TO EXPIRE
86
NO
DERIVE A RANDOM DELAY
84
ACTIVATE OUTPUT; START ON TIMER
88
90
IS USER ALLOWED TO SHUT OFF
YES
92
IS THERE A VALID SWITCH ACTIVATION
NO
NO
94
HAS ON TIME EXPIRED
NO
YES
YES
96
DEACTIVATE OUTPUT; RESET ON TIMER
IS THERE AN OFF DELAY
98
NO
YES
IGNORE ANY NEW INPUT FOR FIXED OR RANDOM OFF DELAY TIME
99
RETURN TO A

Fig. 11.

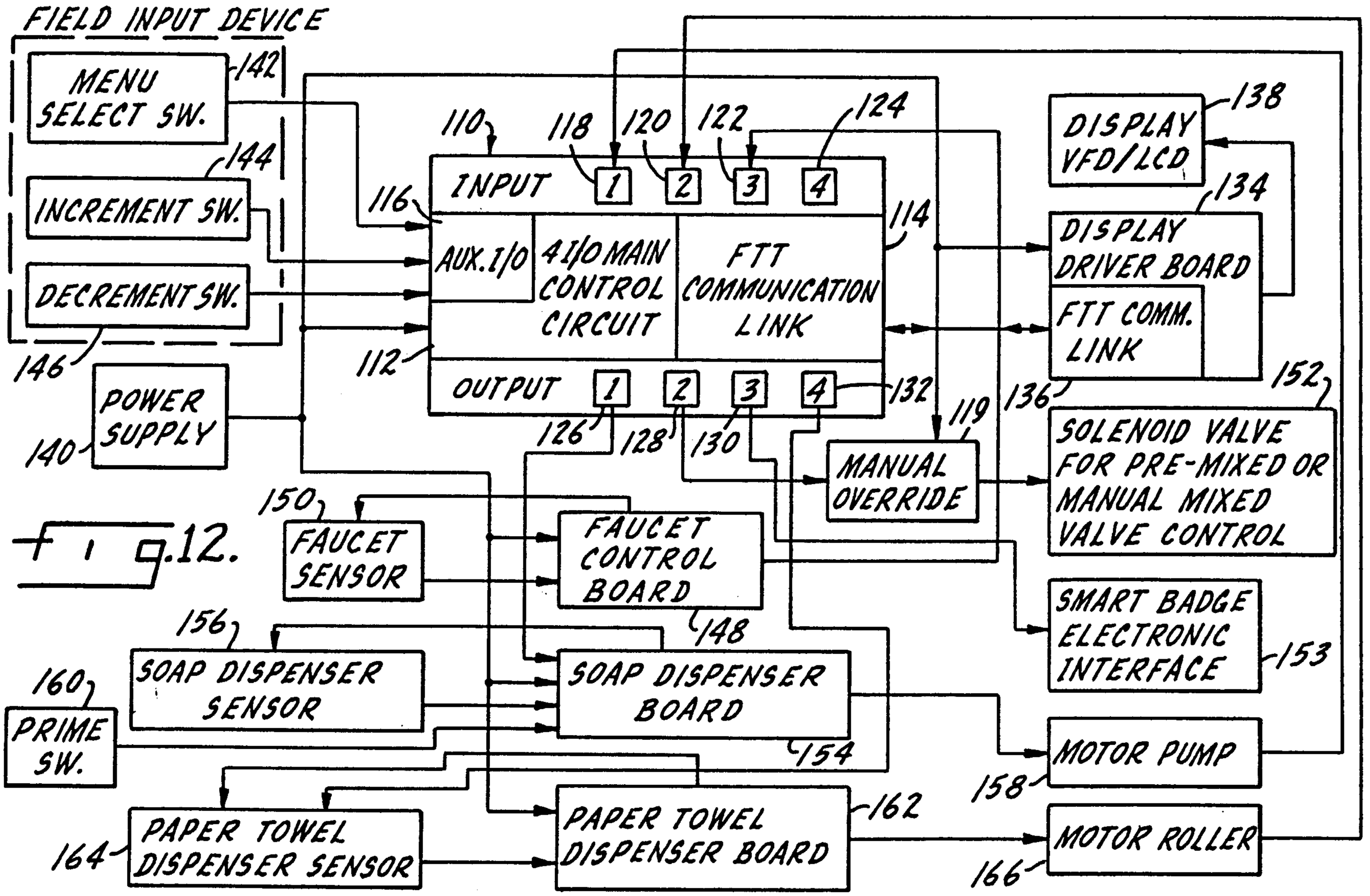
FIELD INPUT DEVICE
MENU SELECT SW.
142
INCREMENT SW.
144
DECREMENT SW.
146
POWER SUPPLY
140
110
118
120
122
124
INPUT
1
2
3
4
116
AUX. I/O
4 I/O MAIN CONTROL CIRCUIT
FTT COMMUNICATION LINK
114
112
OUTPUT
1
2
3
4
132
126
128
130
119
MANUAL OVERRIDE
DISPLAY VFD/LCD
138
DISPLAY DRIVER BOARD
134
FTT COMM. LINK
136
152
SOLENOID VALVE FOR PRE-MIXED OR MANUAL MIXED VALVE CONTROL
SMART BADGE ELECTRONIC INTERFACE
153
MOTOR PUMP
158
MOTOR ROLLER
166
150
FAUCET SENSOR
FAUCET CONTROL BOARD
148
156
SOAP DISPENSER SENSOR
SOAP DISPENSER BOARD
154
160
PRIME SW.
PAPER TOWEL DISPENSER SENSOR
164
PAPER TOWEL DISPENSER BOARD
162

Fig. 12.

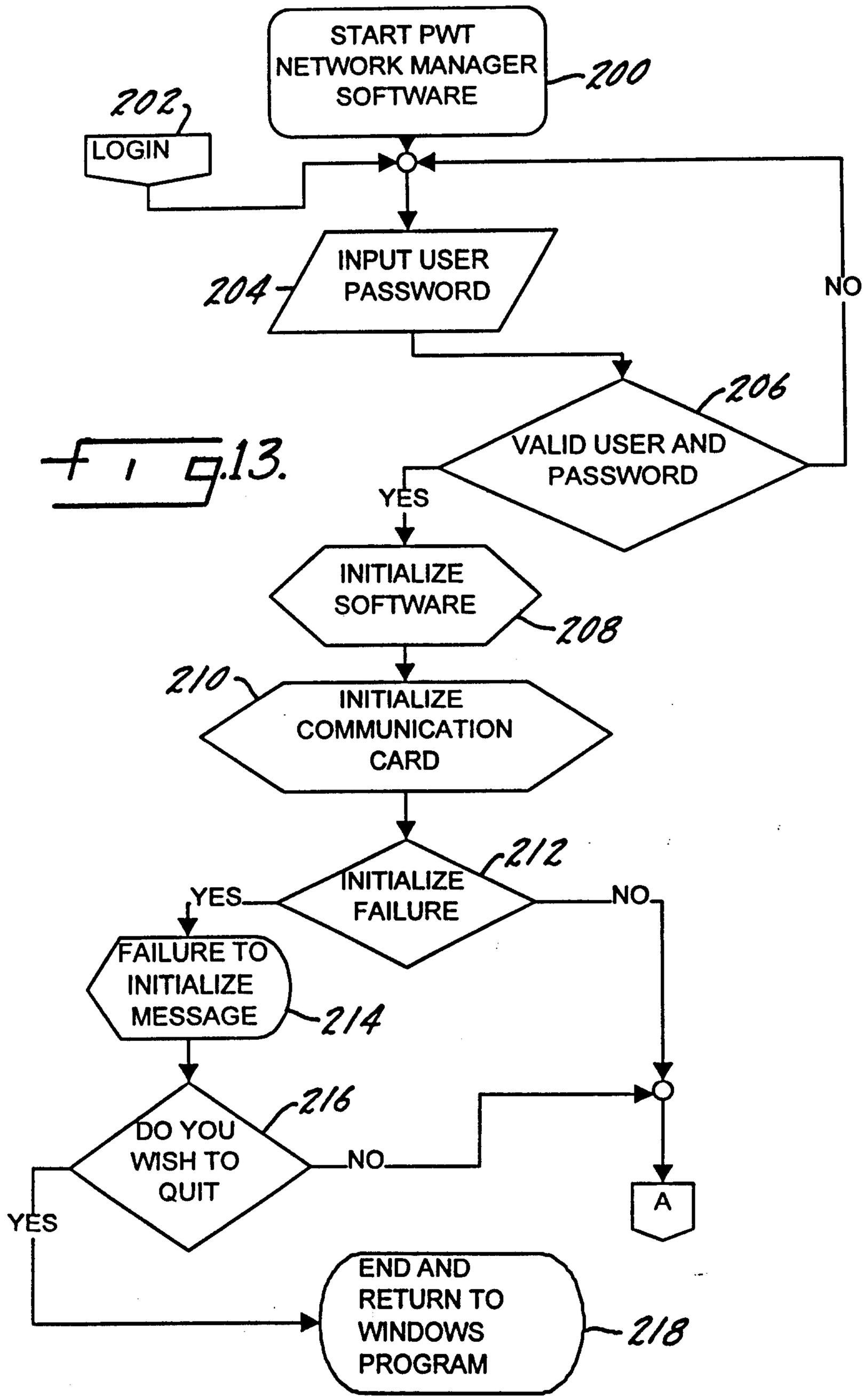
START PWT NETWORK MANAGER SOFTWARE
200
202
LOGIN
INPUT USER PASSWORD
204
NO
206
VALID USER AND PASSWORD
YES
INITIALIZE SOFTWARE
208
210
INITIALIZE COMMUNICATION CARD
212
INITIALIZE FAILURE
YES
NO
FAILURE TO INITIALIZE MESSAGE
214
216
DO YOU WISH TO QUIT
NO
YES
A
END AND RETURN TO WINDOWS PROGRAM
218

Fig.13.

Fig.14.

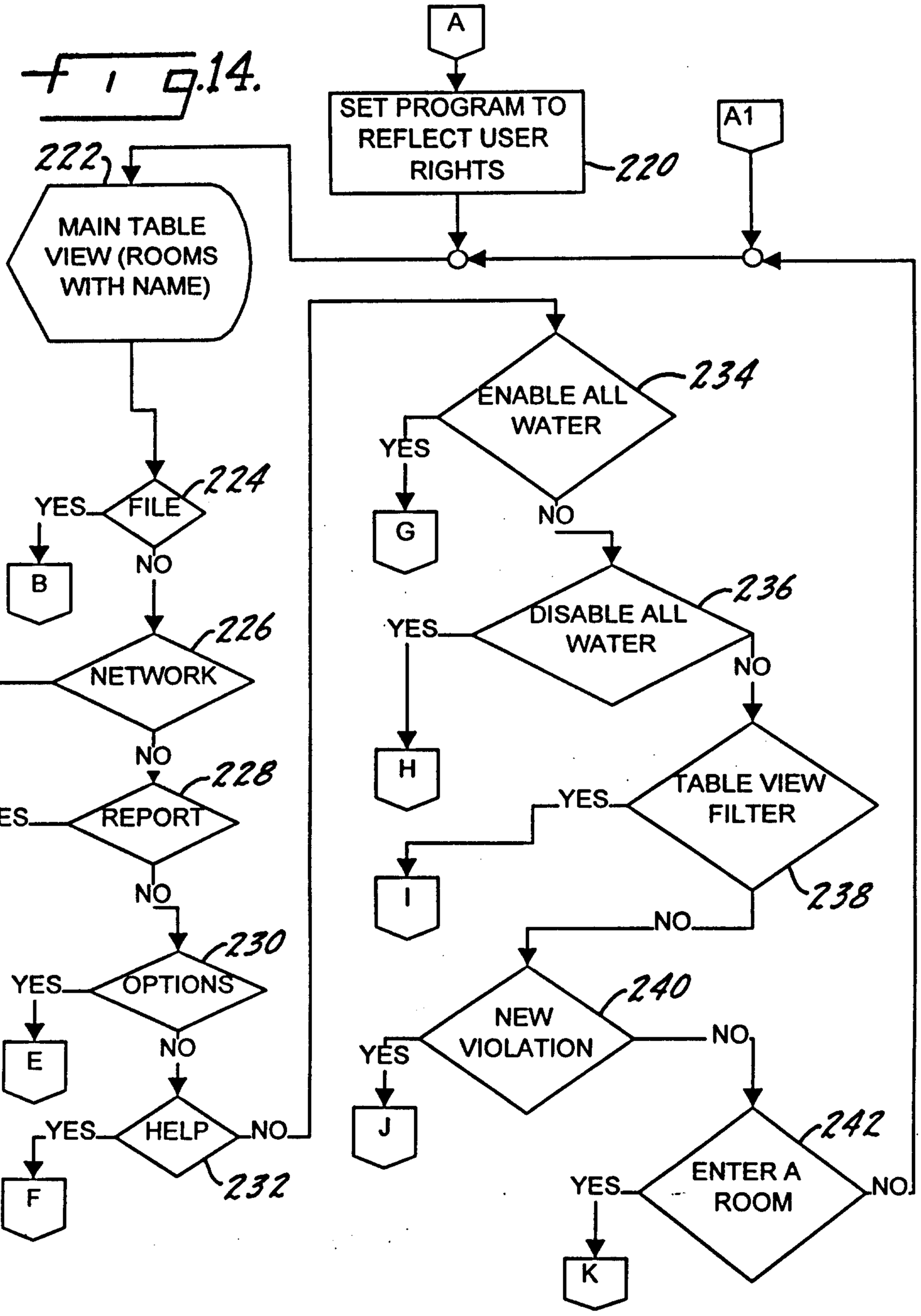
A
SET PROGRAM TO REFLECT USER RIGHTS
220
A1
222
MAIN TABLE VIEW (ROOMS WITH NAME)
224
FILE
YES
NO
B
226
NETWORK
YES
NO
C
228
REPORT
YES
NO
D
230
OPTIONS
YES
NO
E
HELP
YES
NO
232
F
234
ENABLE ALL WATER
YES
NO
G
236
DISABLE ALL WATER
YES
NO
H
TABLE VIEW FILTER
YES
NO
I
238
240
NEW VIOLATION
YES
NO
J
242
ENTER A ROOM
YES
NO
K

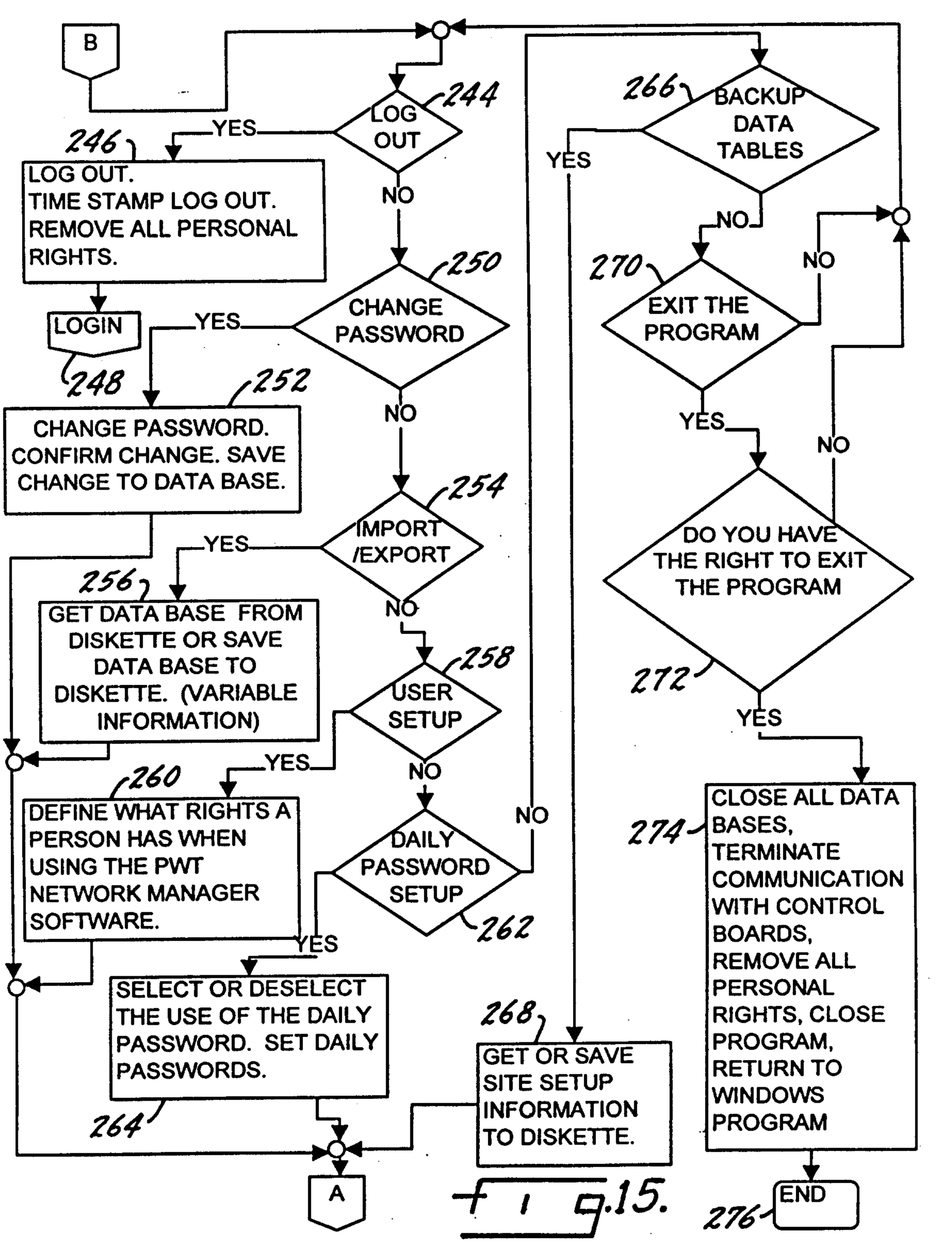
B
244
LOG OUT
YES
246
LOG OUT.
TIME STAMP LOG OUT.
REMOVE ALL PERSONAL RIGHTS.
NO
250
CHANGE PASSWORD
YES
LOGIN
248
252
CHANGE PASSWORD.
CONFIRM CHANGE. SAVE CHANGE TO DATA BASE.
NO
254
IMPORT /EXPORT
YES
256
GET DATA BASE FROM DISKETTE OR SAVE DATA BASE TO DISKETTE. (VARIABLE INFORMATION)
NO
258
USER SETUP
YES
NO
260
DEFINE WHAT RIGHTS A PERSON HAS WHEN USING THE PWT NETWORK MANAGER SOFTWARE.
DAILY PASSWORD SETUP
262
YES
NO
SELECT OR DESELECT THE USE OF THE DAILY PASSWORD. SET DAILY PASSWORDS.
264
268
GET OR SAVE SITE SETUP INFORMATION TO DISKETTE.
A
266
BACKUP DATA TABLES
YES
NO
270
EXIT THE PROGRAM
NO
YES
DO YOU HAVE THE RIGHT TO EXIT THE PROGRAM
272
YES
274
CLOSE ALL DATA BASES, TERMINATE COMMUNICATION WITH CONTROL BOARDS, REMOVE ALL PERSONAL RIGHTS, CLOSE PROGRAM, RETURN TO WINDOWS PROGRAM
276
END

Fig.15.

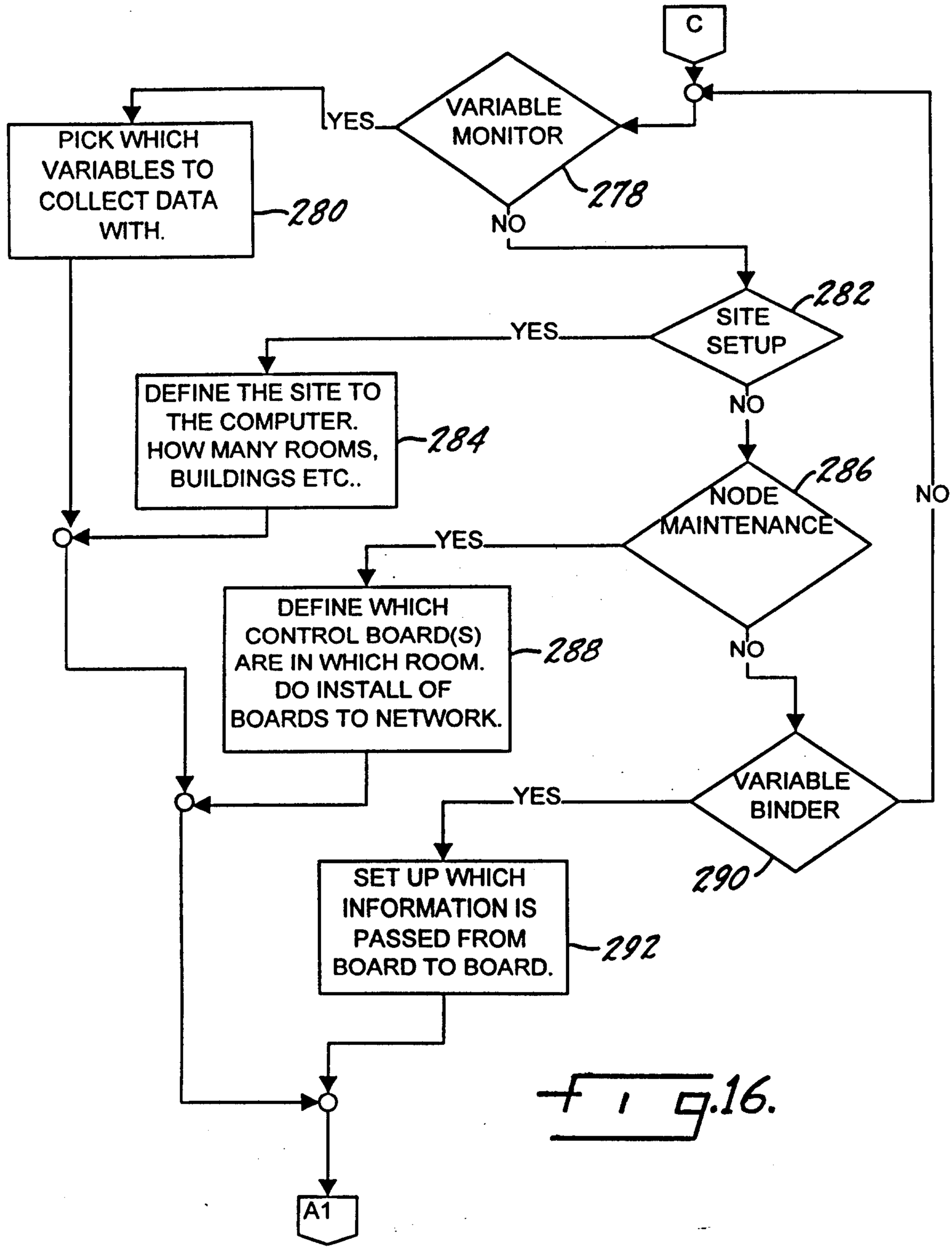
C
VARIABLE MONITOR
278
YES
NO
PICK WHICH VARIABLES TO COLLECT DATA WITH.
280
SITE SETUP
282
YES
NO
DEFINE THE SITE TO THE COMPUTER. HOW MANY ROOMS, BUILDINGS ETC..
284
NODE MAINTENANCE
286
YES
NO
DEFINE WHICH CONTROL BOARD(S) ARE IN WHICH ROOM. DO INSTALL OF BOARDS TO NETWORK.
288
VARIABLE BINDER
290
YES
NO
SET UP WHICH INFORMATION IS PASSED FROM BOARD TO BOARD.
292
A1

Fig.16.

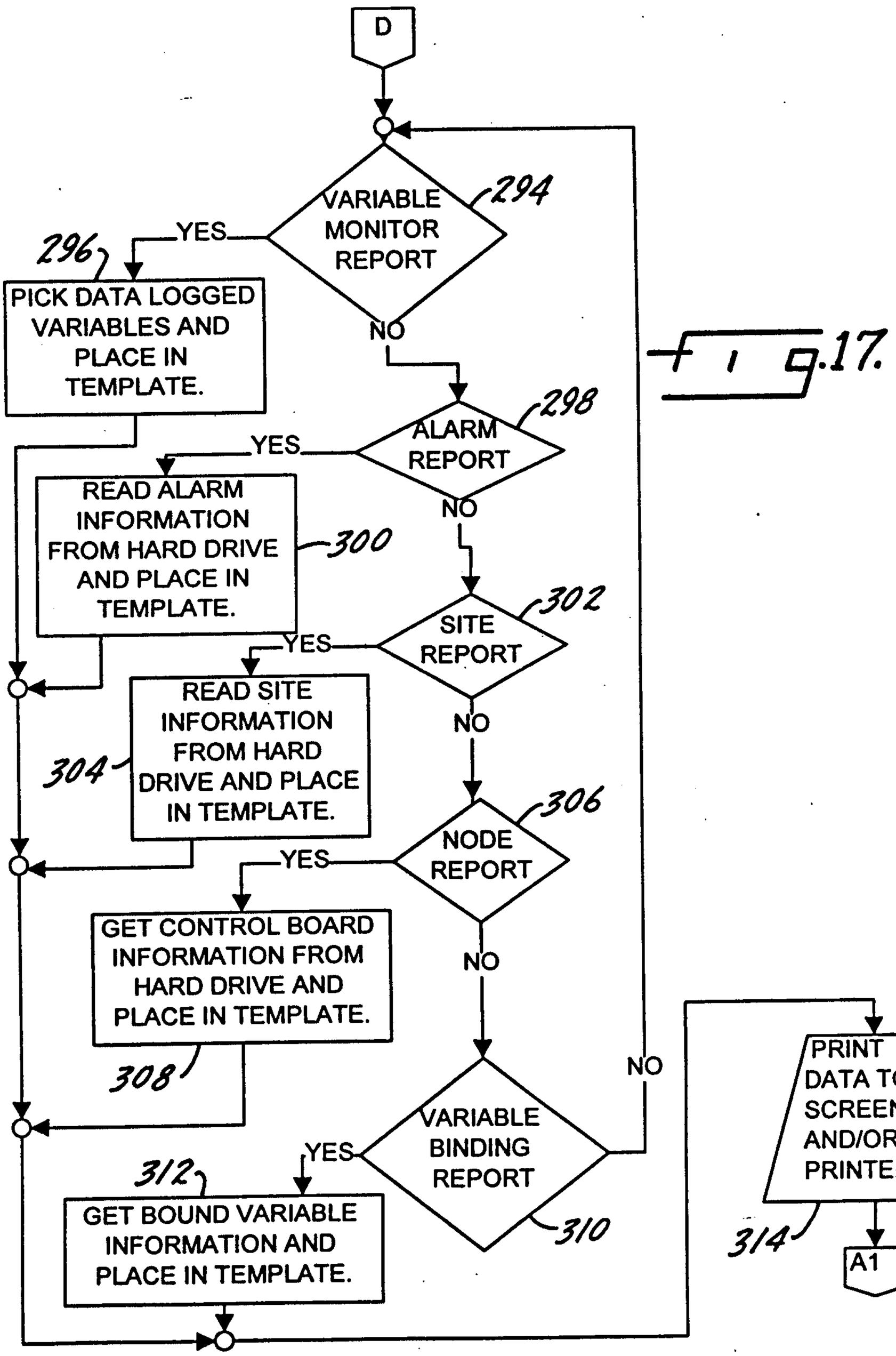
D
VARIABLE MONITOR REPORT
294
YES
296
PICK DATA LOGGED VARIABLES AND PLACE IN TEMPLATE.
NO
ALARM REPORT
298
YES
READ ALARM INFORMATION FROM HARD DRIVE AND PLACE IN TEMPLATE.
300
NO
SITE REPORT
302
YES
READ SITE INFORMATION FROM HARD DRIVE AND PLACE IN TEMPLATE.
304
NO
NODE REPORT
306
YES
GET CONTROL BOARD INFORMATION FROM HARD DRIVE AND PLACE IN TEMPLATE.
308
NO
VARIABLE BINDING REPORT
310
YES
GET BOUND VARIABLE INFORMATION AND PLACE IN TEMPLATE.
312
PRINT DATA TO SCREEN AND/OR PRINTER
314
A1

Fig.17.

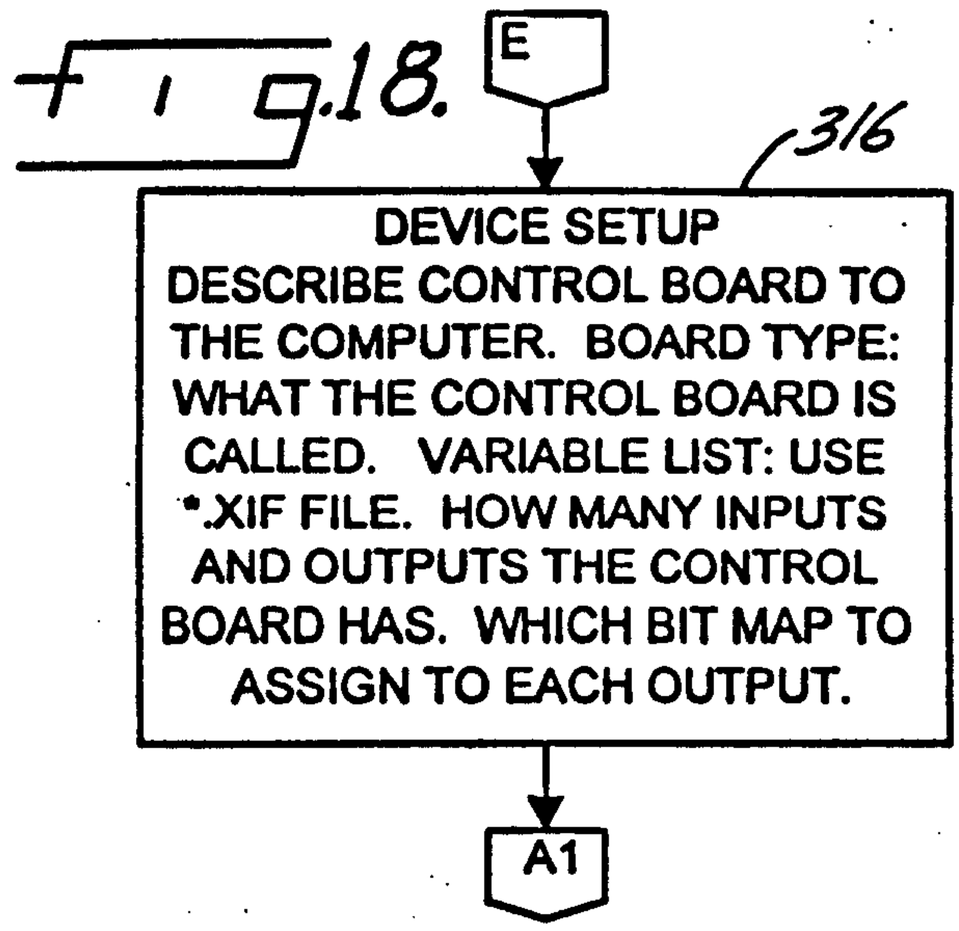

Fig.18.

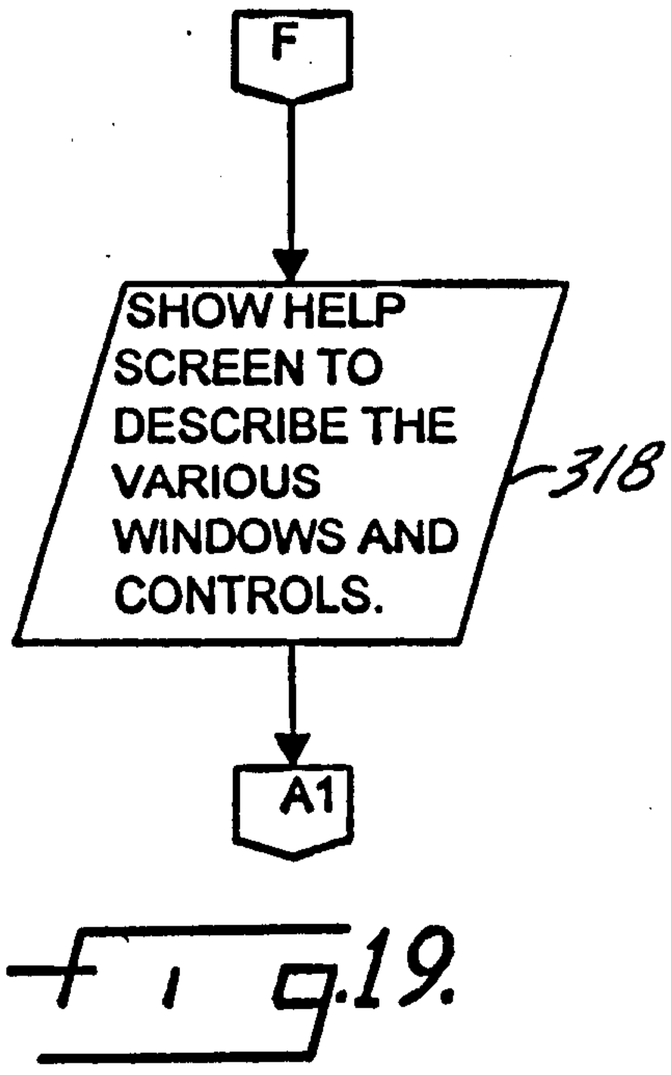

Fig.19.

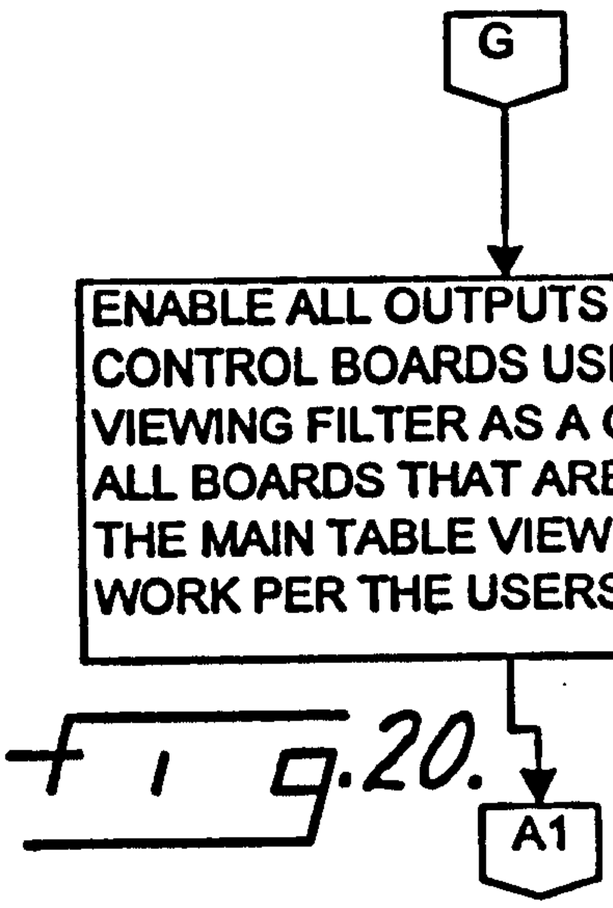

Fig.20.

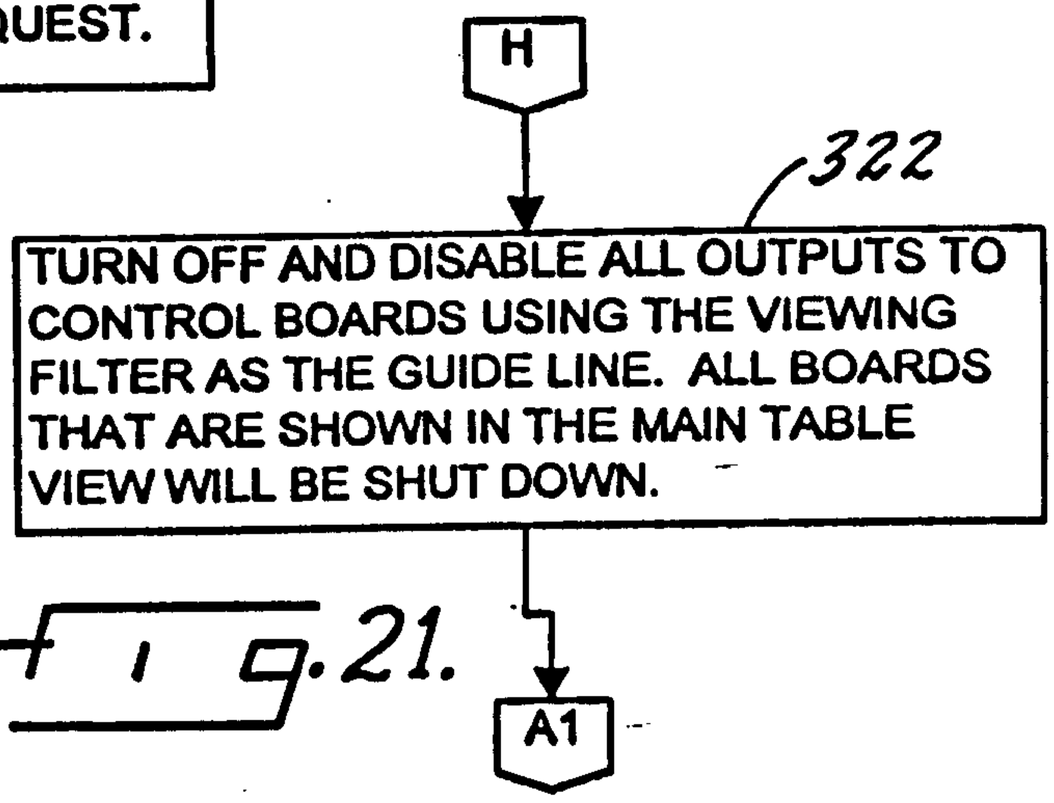

Fig.21.

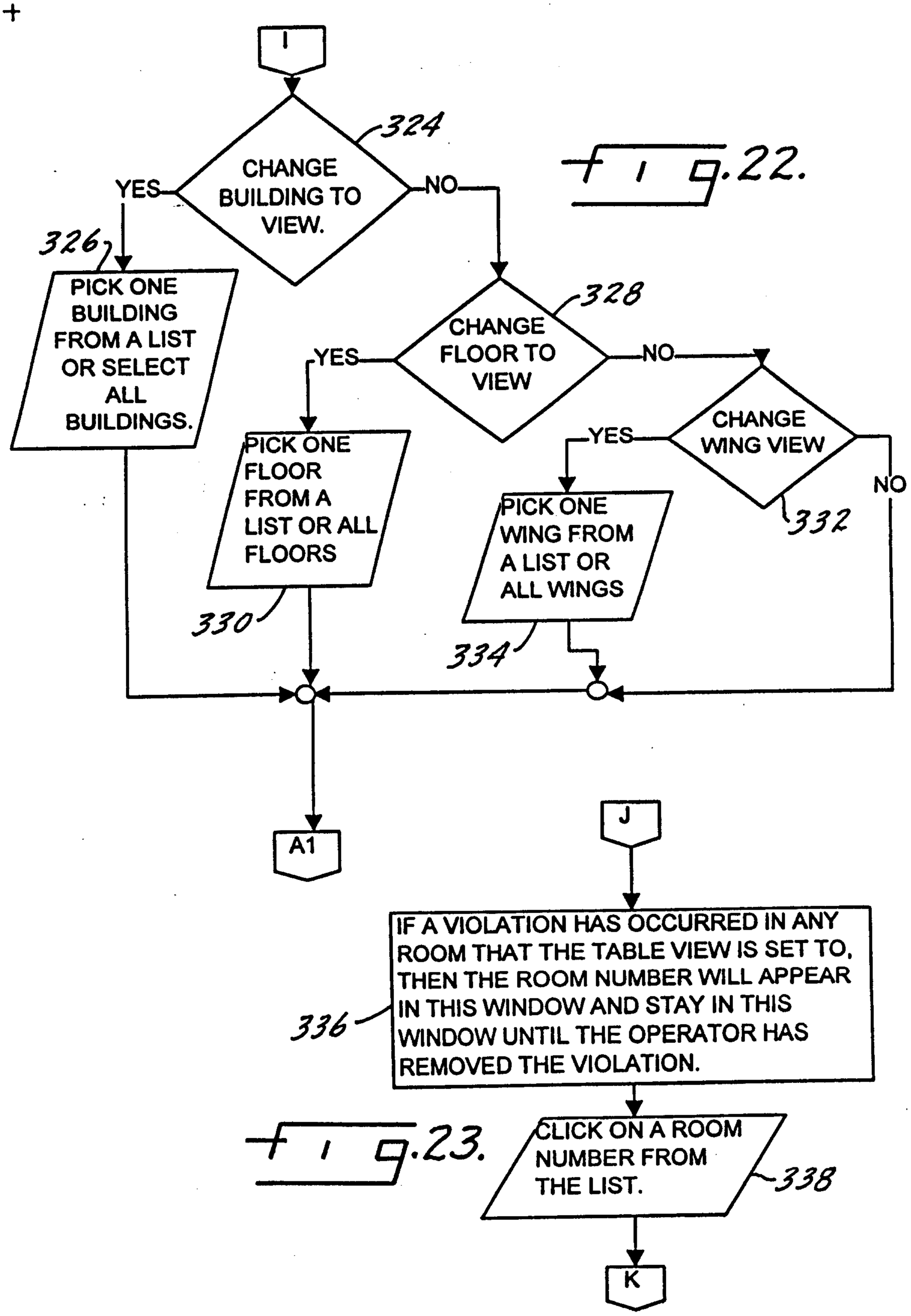
I
324
CHANGE BUILDING TO VIEW.
YES
NO
326
PICK ONE BUILDING FROM A LIST OR SELECT ALL BUILDINGS.
328
CHANGE FLOOR TO VIEW
YES
NO
PICK ONE FLOOR FROM A LIST OR ALL FLOORS
330
CHANGE WING VIEW
YES
NO
332
PICK ONE WING FROM A LIST OR ALL WINGS
334
A1
J
IF A VIOLATION HAS OCCURRED IN ANY ROOM THAT THE TABLE VIEW IS SET TO, THEN THE ROOM NUMBER WILL APPEAR IN THIS WINDOW AND STAY IN THIS WINDOW UNTIL THE OPERATOR HAS REMOVED THE VIOLATION.
336
CLICK ON A ROOM NUMBER FROM THE LIST.
338
K

Fig. 22.

Fig. 23.

Fig. 24.

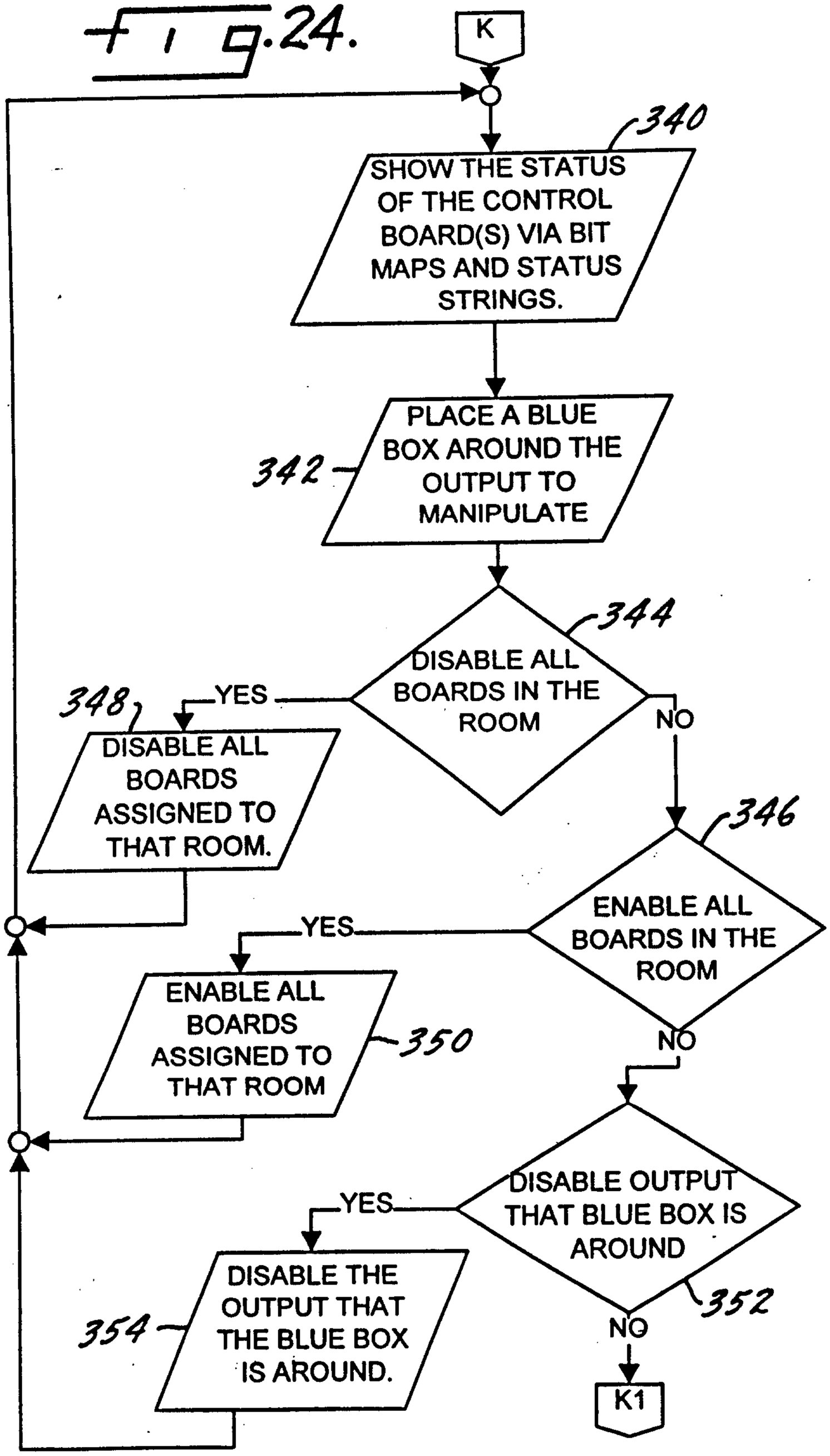
K
340
SHOW THE STATUS OF THE CONTROL BOARD(S) VIA BIT MAPS AND STATUS STRINGS.
342
PLACE A BLUE BOX AROUND THE OUTPUT TO MANIPULATE
344
DISABLE ALL BOARDS IN THE ROOM
YES
348
DISABLE ALL BOARDS ASSIGNED TO THAT ROOM.
NO
346
ENABLE ALL BOARDS IN THE ROOM
YES
ENABLE ALL BOARDS ASSIGNED TO THAT ROOM
350
NO
DISABLE OUTPUT THAT BLUE BOX IS AROUND
352
YES
354
DISABLE THE OUTPUT THAT THE BLUE BOX IS AROUND.
NO
K1

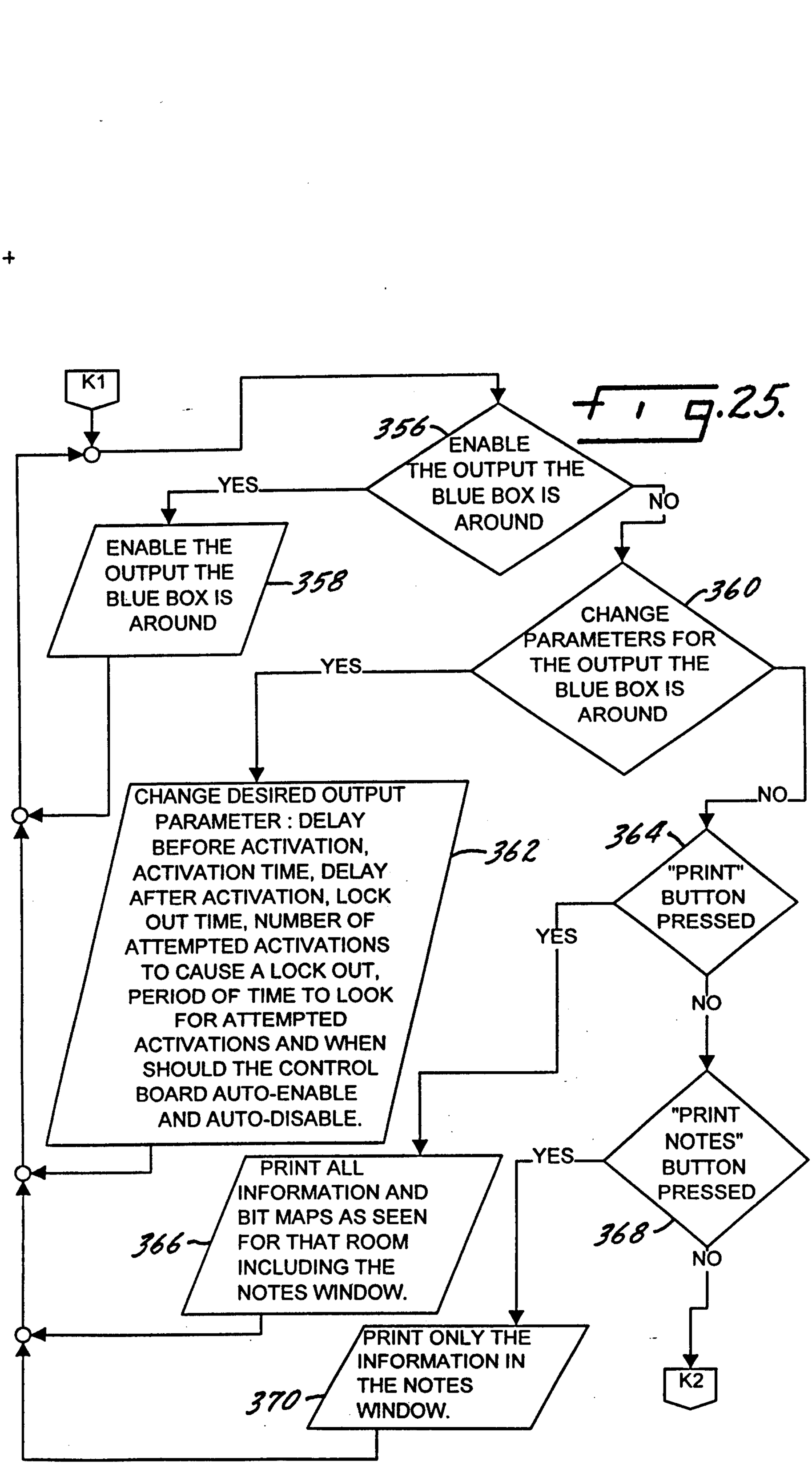
K1
356
ENABLE THE OUTPUT THE BLUE BOX IS AROUND
YES
NO
ENABLE THE OUTPUT THE BLUE BOX IS AROUND
358
360
CHANGE PARAMETERS FOR THE OUTPUT THE BLUE BOX IS AROUND
YES
NO
CHANGE DESIRED OUTPUT PARAMETER : DELAY BEFORE ACTIVATION, ACTIVATION TIME, DELAY AFTER ACTIVATION, LOCK OUT TIME, NUMBER OF ATTEMPTED ACTIVATIONS TO CAUSE A LOCK OUT, PERIOD OF TIME TO LOOK FOR ATTEMPTED ACTIVATIONS AND WHEN SHOULD THE CONTROL BOARD AUTO-ENABLE AND AUTO-DISABLE.
362
364
"PRINT" BUTTON PRESSED
YES
NO
"PRINT NOTES" BUTTON PRESSED
YES
368
NO
K2
PRINT ALL INFORMATION AND BIT MAPS AS SEEN FOR THAT ROOM INCLUDING THE NOTES WINDOW.
366
PRINT ONLY THE INFORMATION IN THE NOTES WINDOW.
370

Fig. 25.

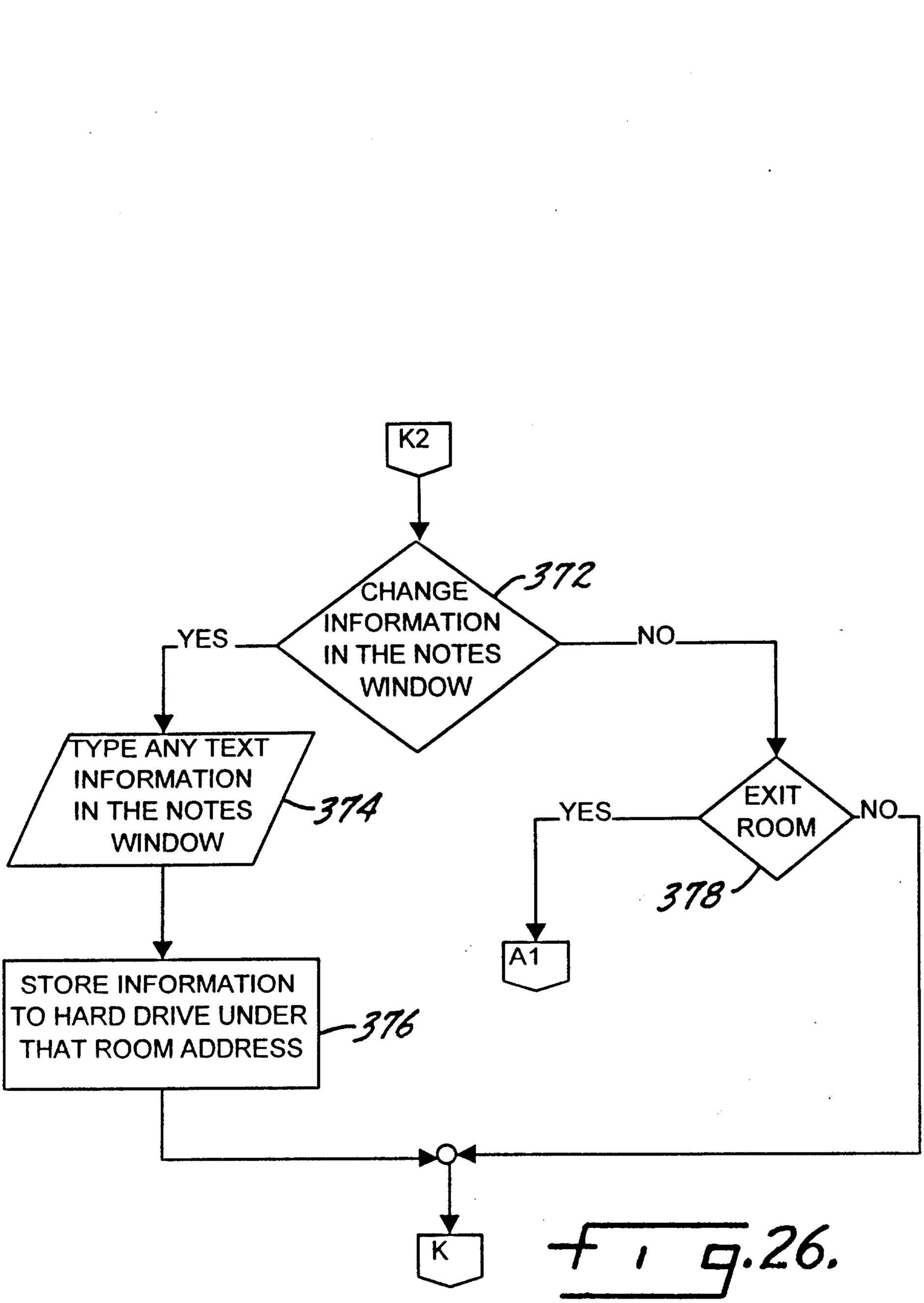
K2
CHANGE INFORMATION IN THE NOTES WINDOW
372
YES
NO
TYPE ANY TEXT INFORMATION IN THE NOTES WINDOW
374
EXIT ROOM
YES
NO
378
A1
STORE INFORMATION TO HARD DRIVE UNDER THAT ROOM ADDRESS
376
K

Fig. 26.

Fig.27.

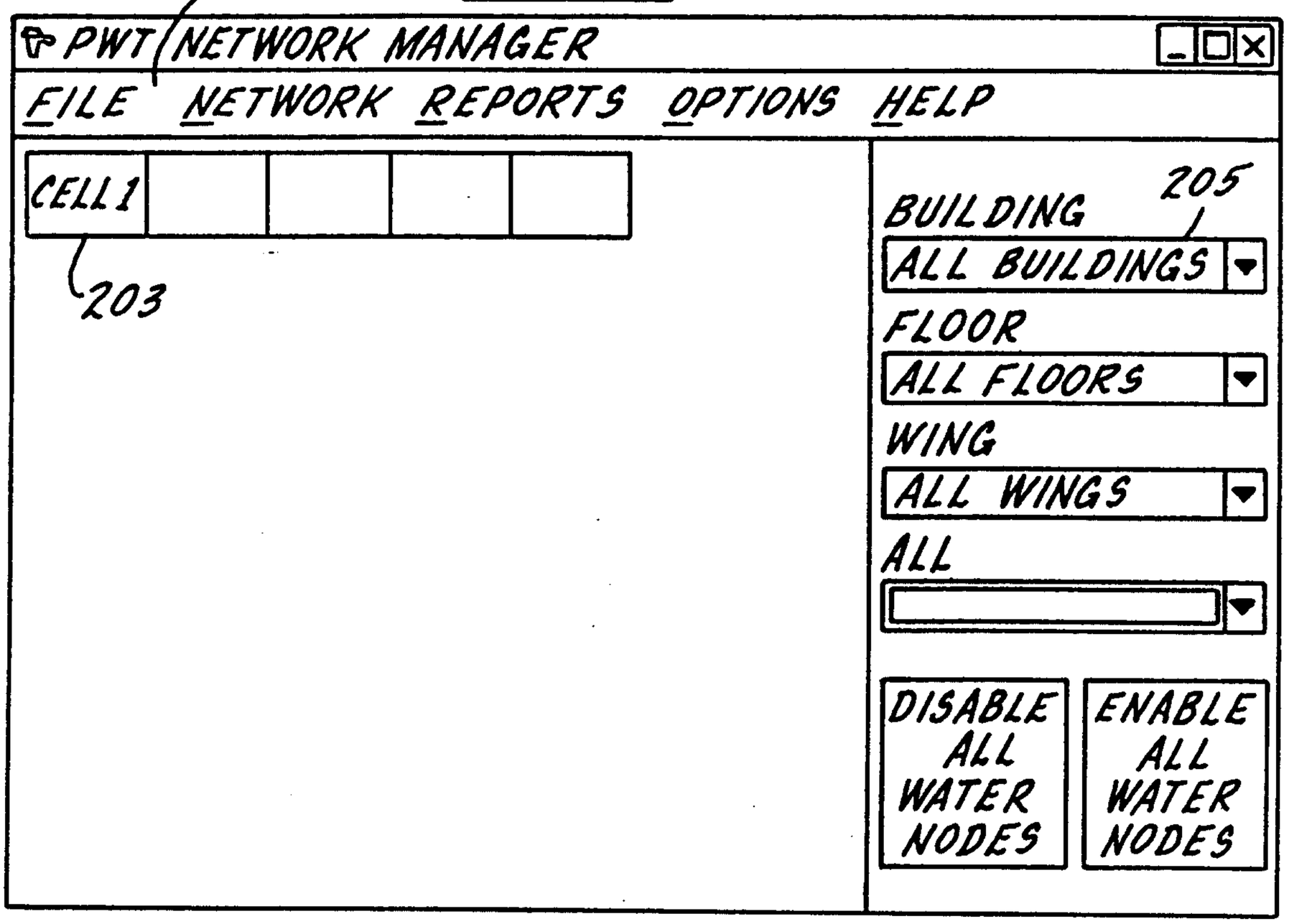
201
PWT NETWORK MANAGER
FILE NETWORK REPORTS OPTIONS HELP
CELL 1
203
205
BUILDING
ALL BUILDINGS
FLOOR
ALL FLOORS
WING
ALL WINGS
ALL
DISABLE ALL WATER NODES
ENABLE ALL WATER NODES

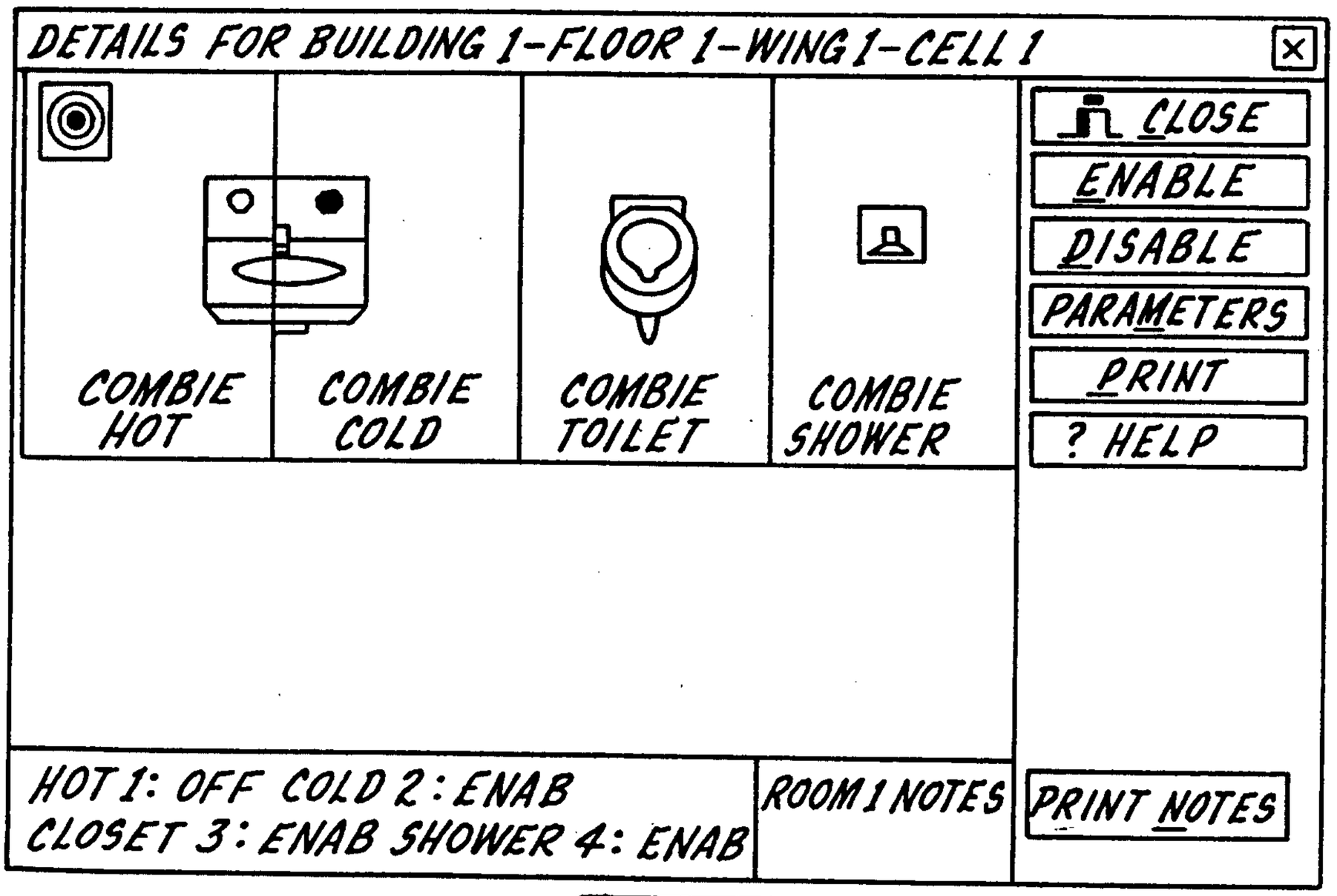
DETAILS FOR BUILDING 1-FLOOR 1-WING 1-CELL 1
COMBIE HOT
COMBIE COLD
COMBIE TOILET
COMBIE SHOWER
CLOSE
ENABLE
DISABLE
PARAMETERS
PRINT
? HELP
HOT 1: OFF COLD 2: ENAB
CLOSET 3: ENAB SHOWER 4: ENAB
ROOM 1 NOTES
PRINT NOTES

Fig.28.

DETAILS FOR BUILDING 1-FLOOR 1-WING 1-CELL 1

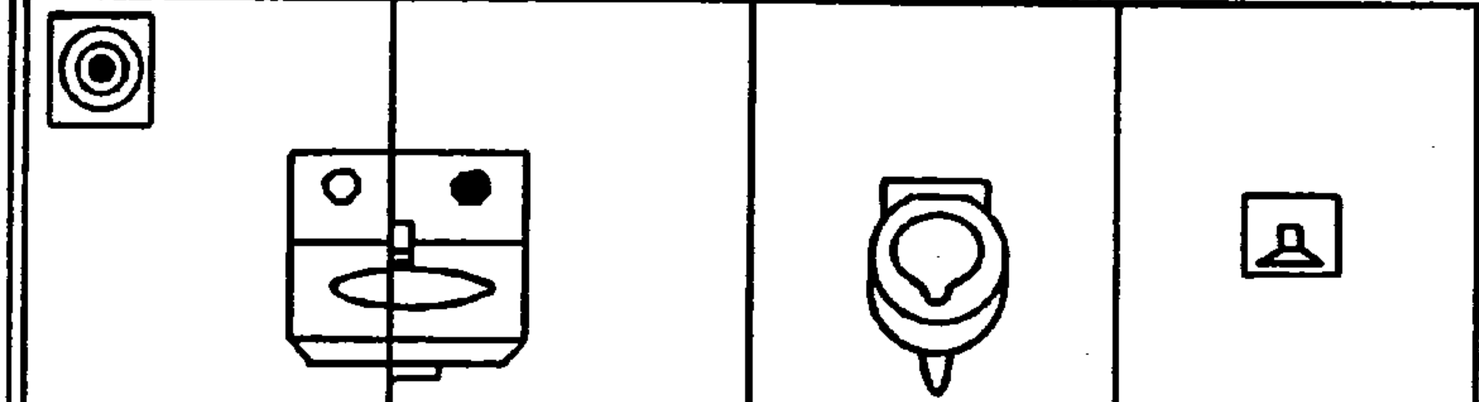

COMBIE HOT | COMBIE COLD | COMBIE TOILET | COMBIE SHOWER

CLOSE
ENABLE
DISABLE
PARAMETERS
PRINT
? HELP

HOT 1: OFF COLD 2: ENAB
CLOSET 3: ENAB SHOWER 4: ENAB

ROOM 1 NOTES

PRINT NOTES