US 20200346547A1

(19) **United States**

(12) **Patent Application Publication** (10) **Pub. No.: US 2020/0346547 A1**

Rocholl et al. (43) **Pub. Date: Nov. 5, 2020**

(54) **AUXILIARY POWER SYSTEM FOR ELECTRIC REFUSE VEHICLE**

(71) Applicant: **Oshkosh Corporation**, Oshkosh, WI (US)

(72) Inventors: **Joshua D. Rocholl**, Rochester, MN (US); **Derek A. Wente**, Austin, MN (US); **John T. Kellander**, Oronoco, MN (US); **Cody D. Clifton**, Mapleton, MN (US); **Vincent Hoover**, Byron, MN (US); **Zachary L. Klein**, Rochester, MN (US); **Clinton T. Weckwerth**, Pine Island, MN (US); **Skylar A. Wachter**, Dodge Center, MN (US); **Chad Smith**, Omro, WI (US); **Mike Bolton**, Oshkosh, WI (US); **Shawn Naglik**, Oshkosh, WI (US)

(73) Assignee: **Oshkosh Corporation**, Oshkosh, WI (US)

(21) Appl. No.: **16/851,152**

(22) Filed: **Apr. 17, 2020**

Related U.S. Application Data

(60) Provisional application No. 62/843,062, filed on May 3, 2019.

Publication Classification

(51) **Int. Cl.**

B60L 1/00	(2006.01)
B60K 1/02	(2006.01)
B60K 1/04	(2006.01)
B65F 3/04	(2006.01)

(52) **U.S. Cl.**

CPC ***B60L 1/003*** (2013.01); ***B60K 1/02*** (2013.01); *B60L 50/00* (2019.02); ***B65F 3/04*** (2013.01); ***B60K 1/04*** (2013.01)

(57) **ABSTRACT**

A refuse vehicle including a chassis, a body assembly coupled to the chassis, the body assembly defining a refuse compartment, an electric energy system, an auxiliary power system comprising a reservoir to hold a hydraulic fluid, and a hydraulic pump powered by an electric motor, wherein the electric motor is powered by the electric energy system and the hydraulic pump pressurizes the hydraulic fluid to power one or more actuators, and wherein a prime mover of the refuse vehicle charges the electric energy system.

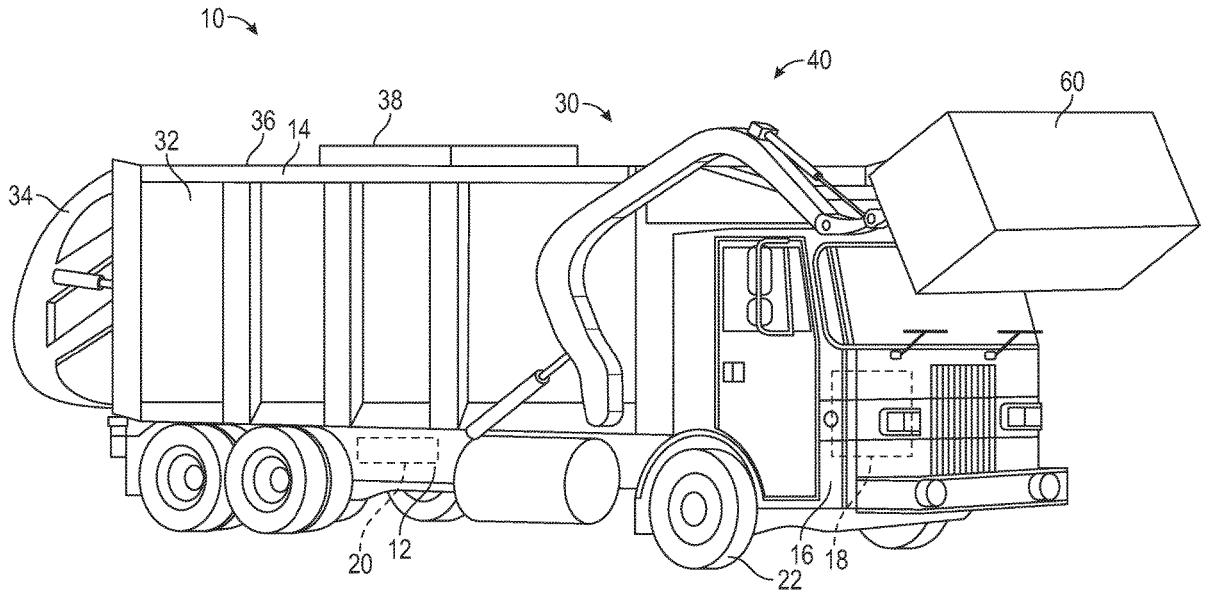

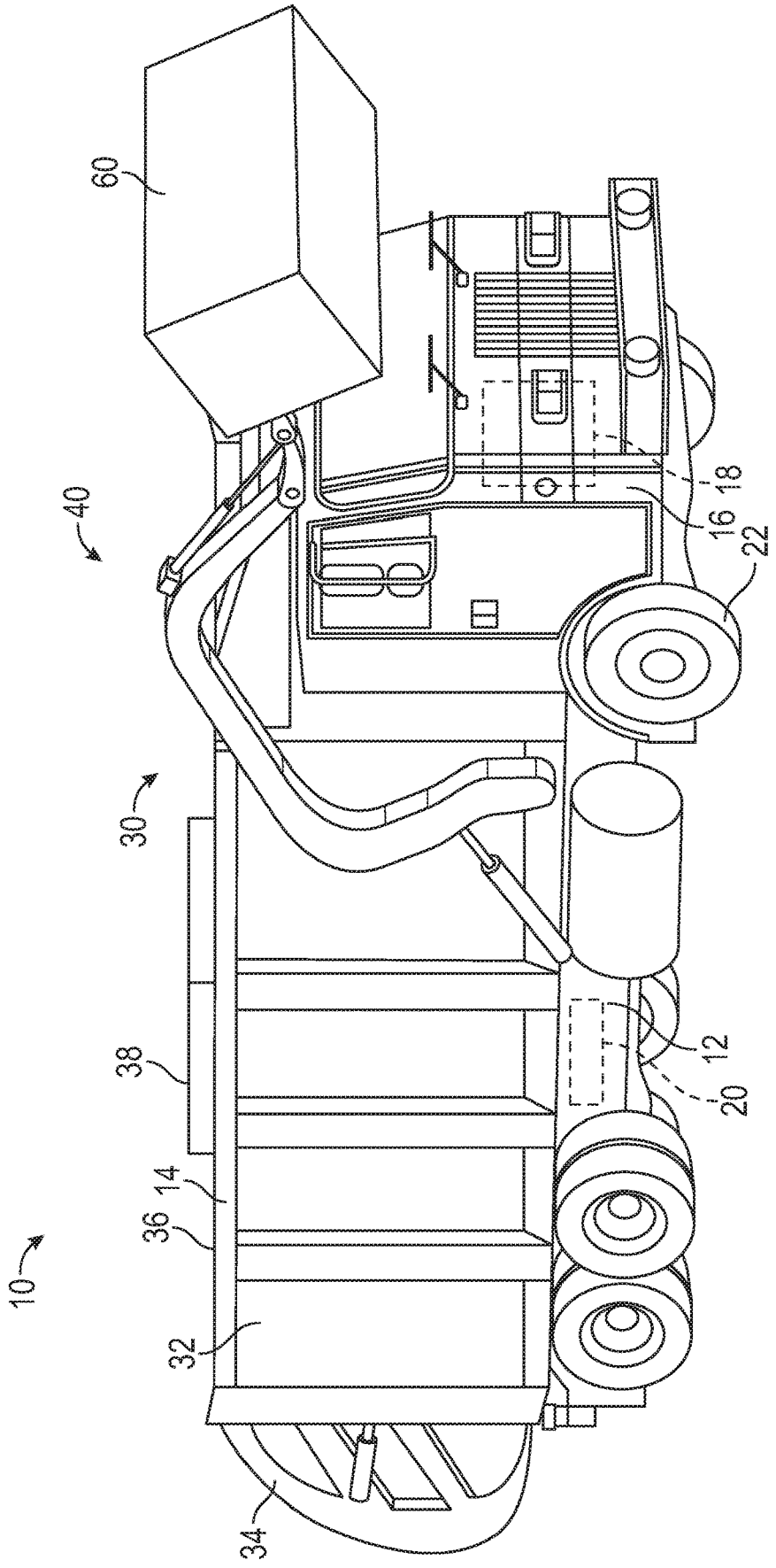

FIG. 1

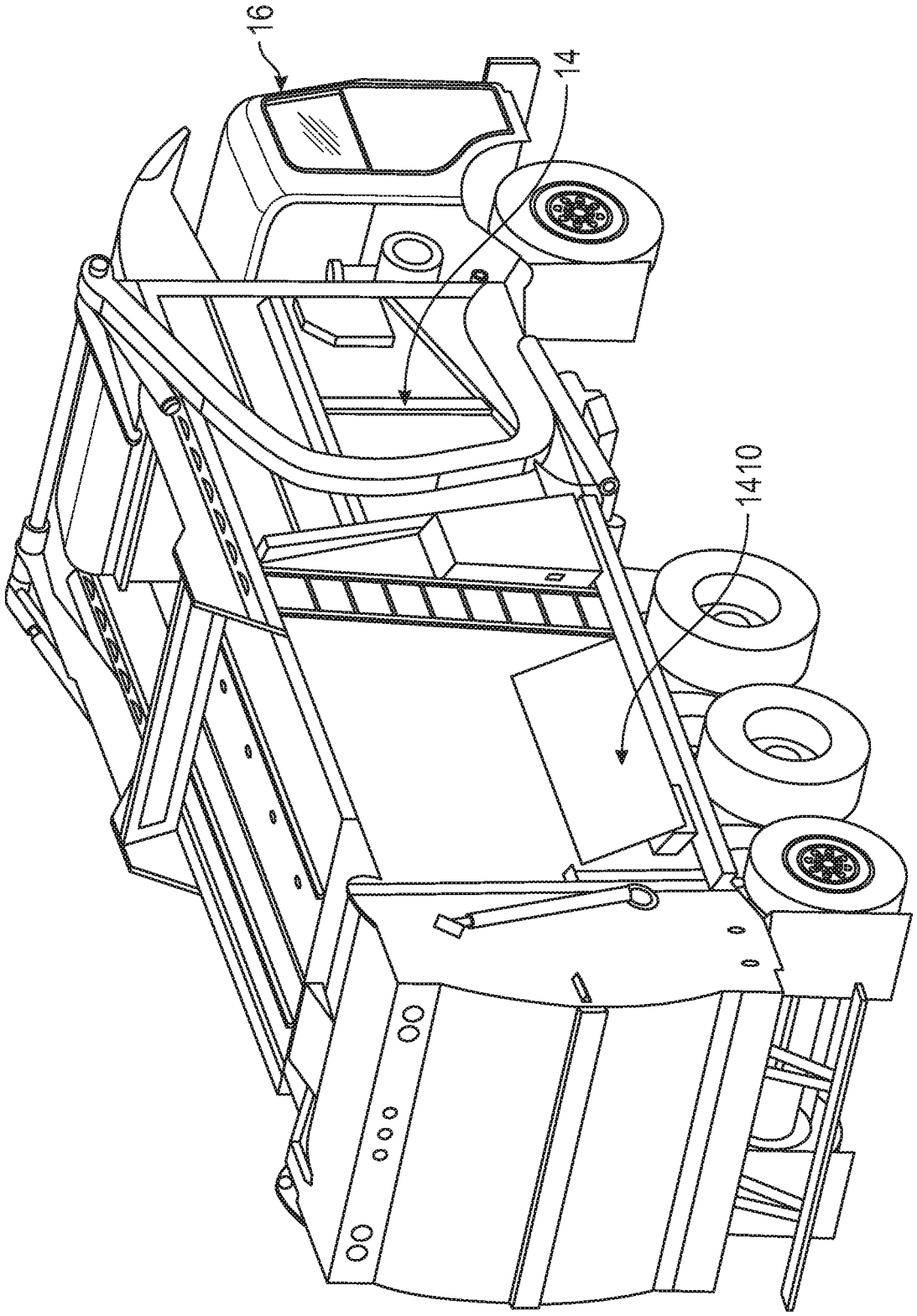

FIG. 2

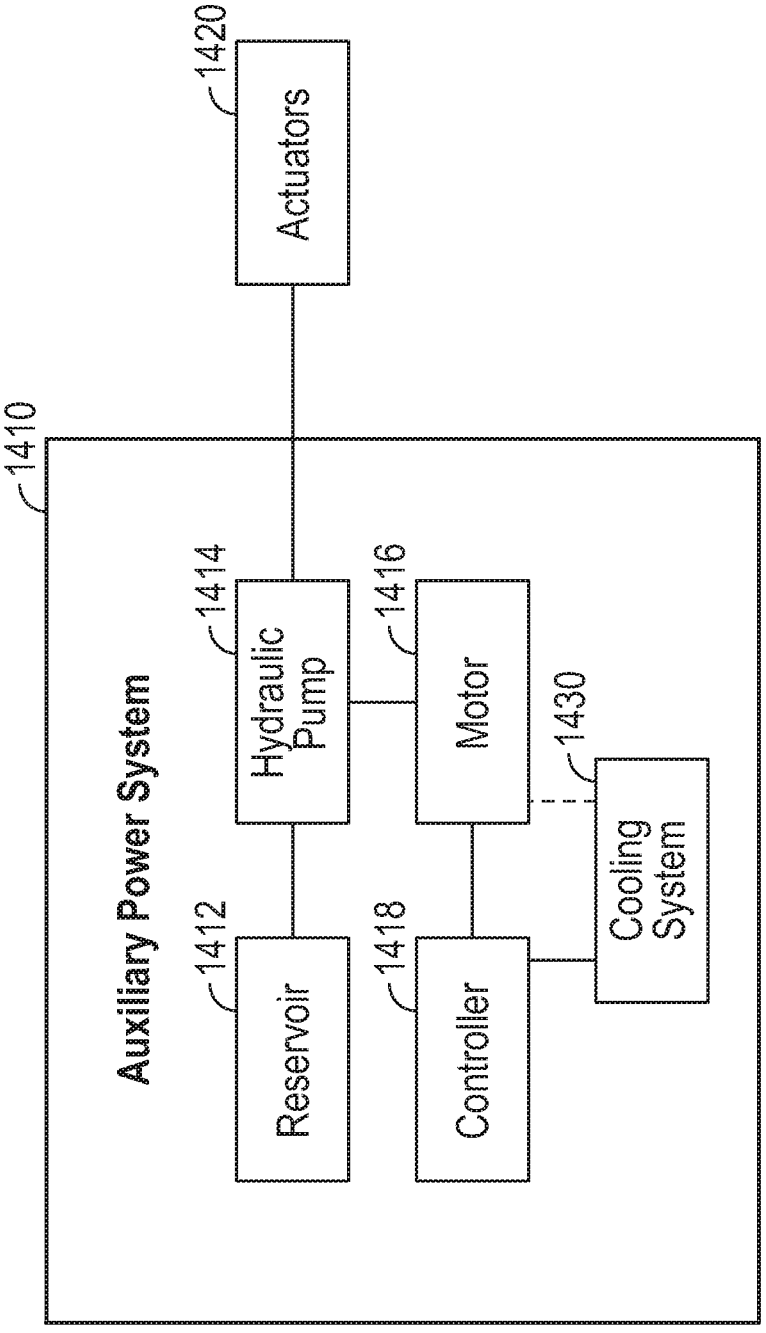
1420
Actuators
1410
Auxiliary Power System
1414
Hydraulic Pump
1416
Motor
1430
Cooling System
1412
Reservoir
1418
Controller

FIG. 3

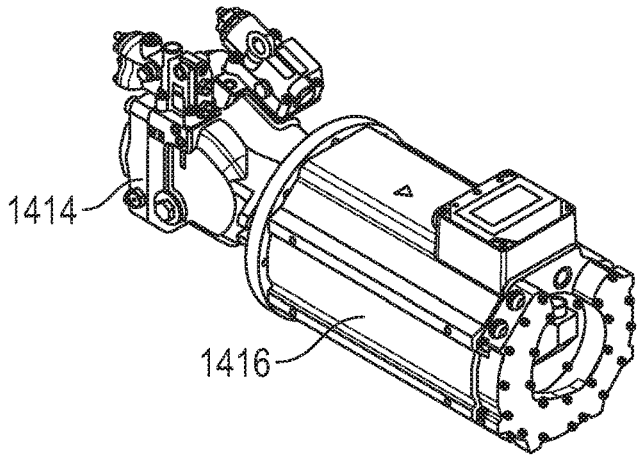

FIG. 4A

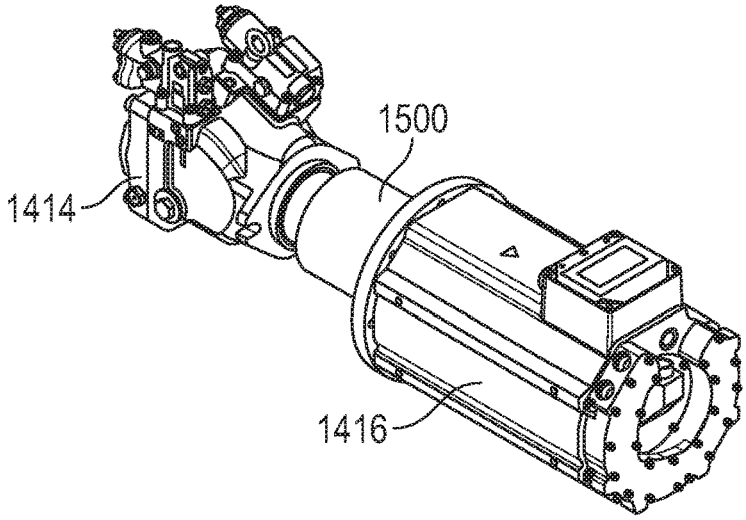

FIG. 4B

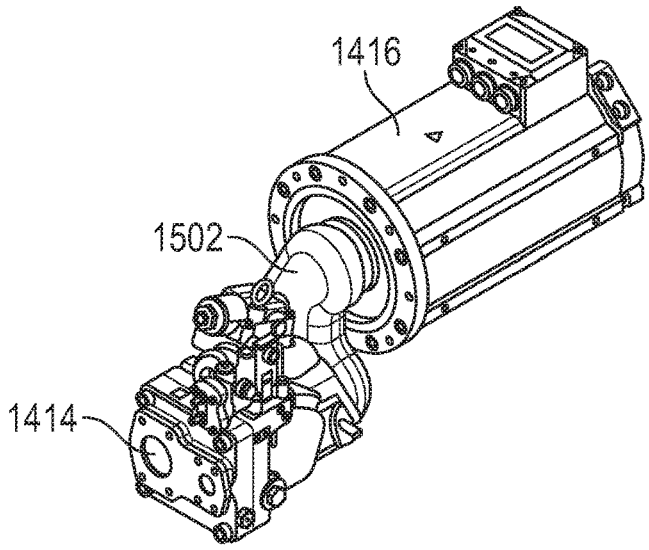

FIG. 4C

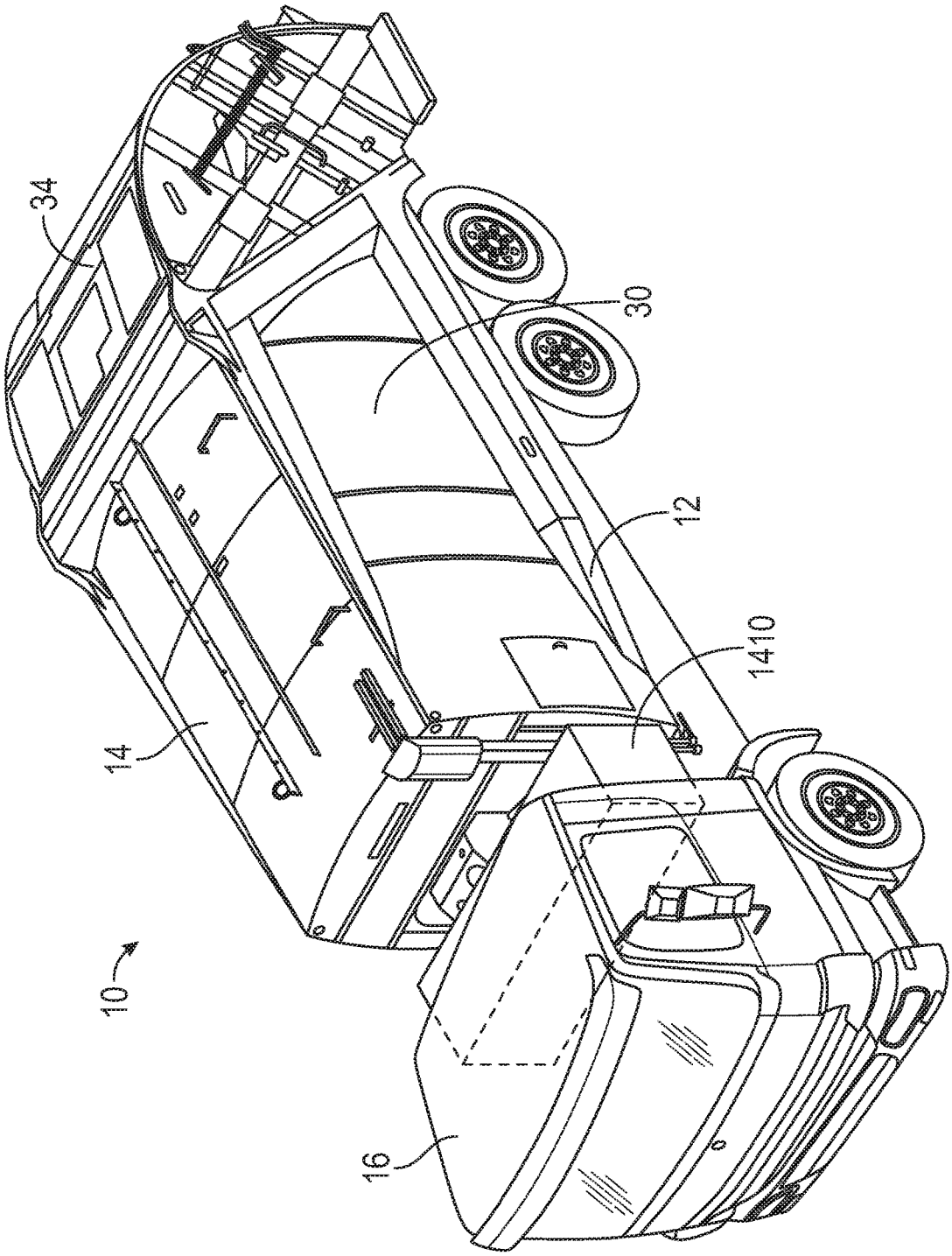

FIG. 5A

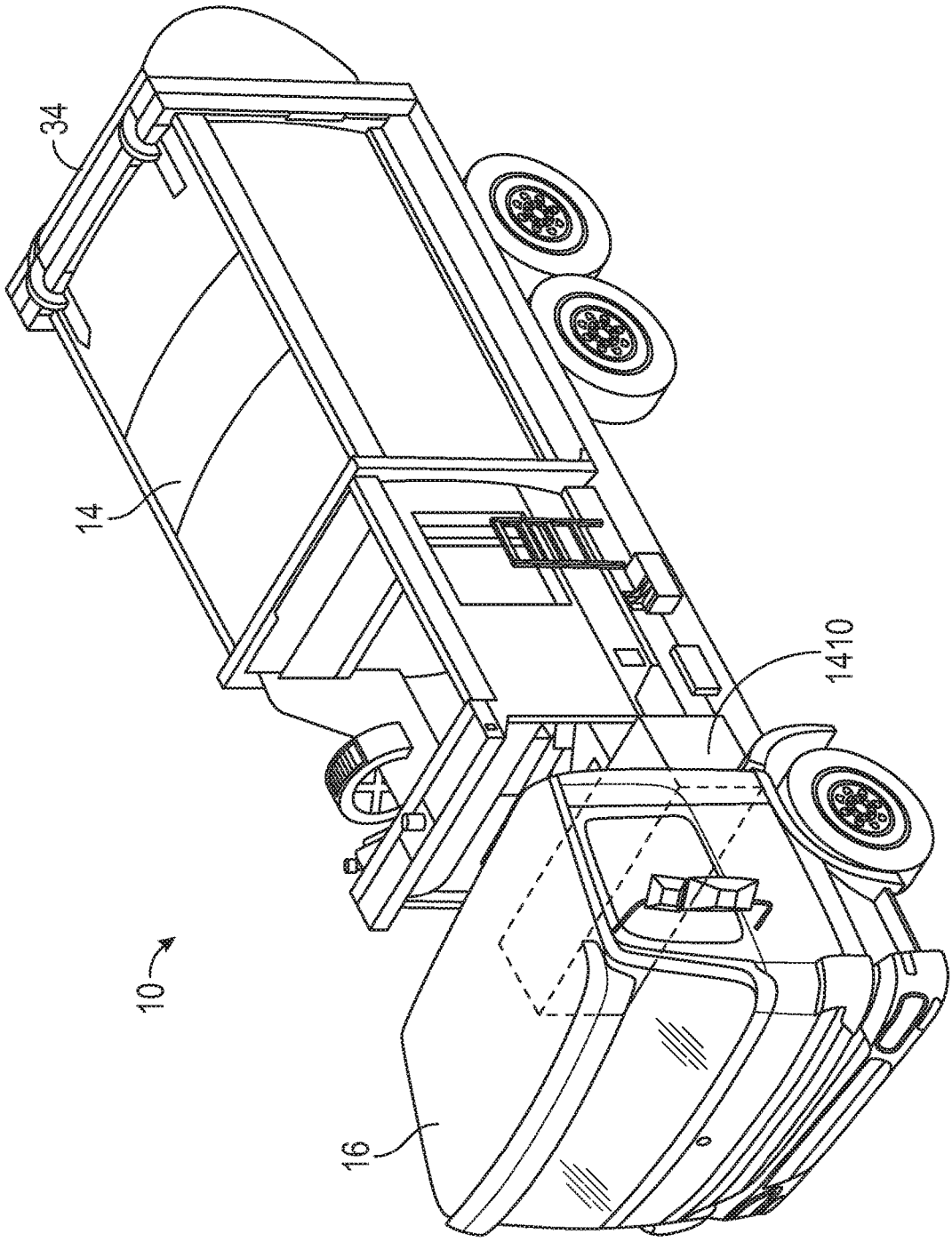

FIG. 5B

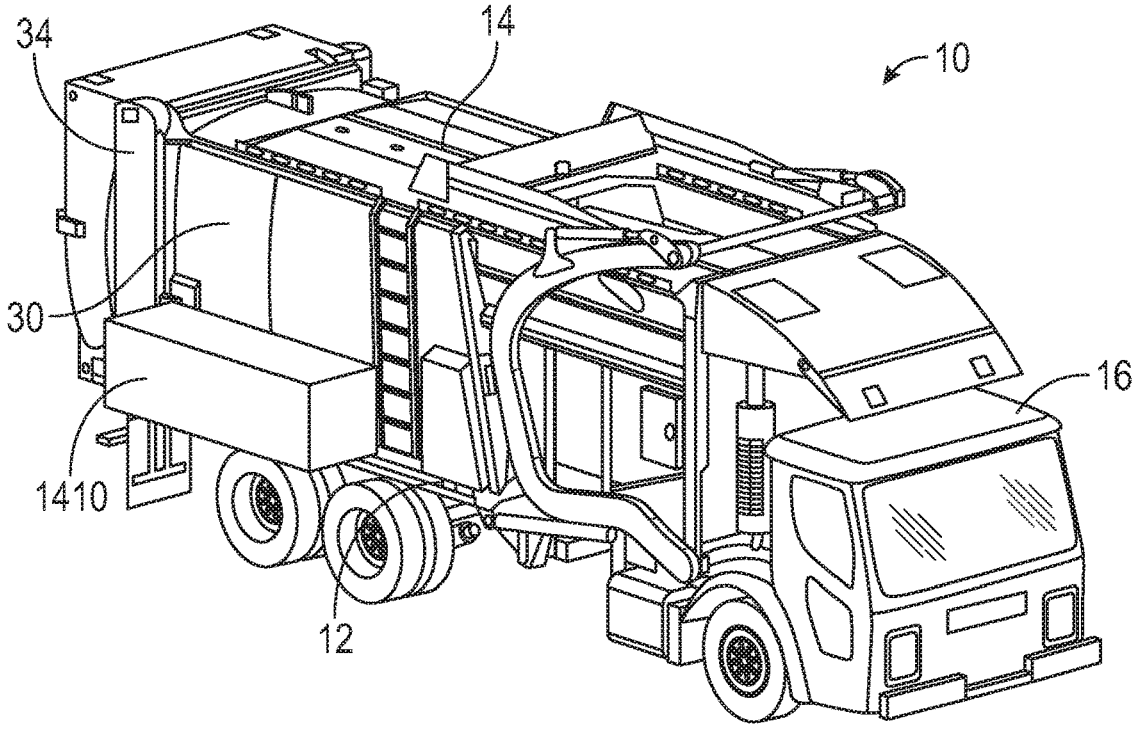

FIG. 5C

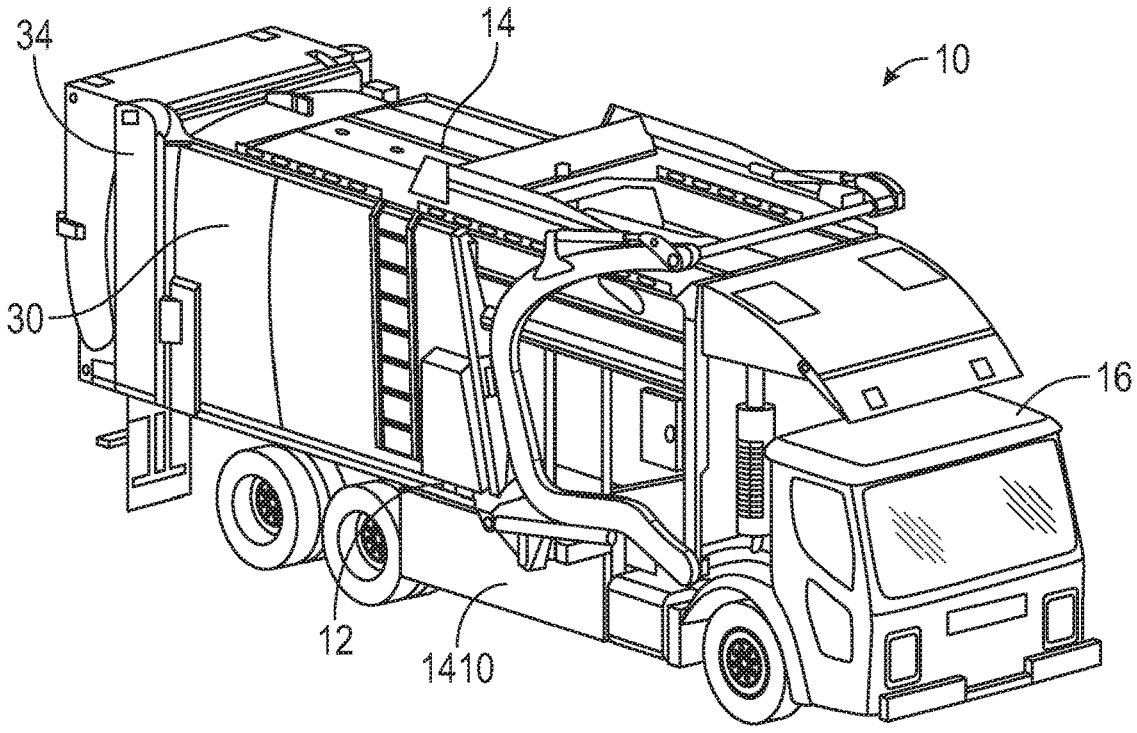

FIG. 5D

AUXILIARY POWER SYSTEM FOR ELECTRIC REFUSE VEHICLE

CROSS-REFERENCE TO RELATED PATENT APPLICATIONS

[0001] The present Application claims the benefit and priority to U.S. Provisional Patent Application No. 62/843,062, filed on May 3, 2019, the entire disclosure of which is incorporated by reference herein.

BACKGROUND

[0002] Refuse vehicles collect a wide variety of waste, trash, and other material from residences and businesses. Operators of the refuse vehicles transport the material from various waste receptacles within a municipality to a storage or processing facility (e.g., a landfill, an incineration facility, a recycling facility, etc.).

SUMMARY

[0003] One embodiment relates to a refuse vehicle including a chassis, a body assembly coupled to the chassis, the body assembly defining a refuse compartment, an electric energy system, an auxiliary power system comprising a reservoir to hold a hydraulic fluid, and a hydraulic pump powered by an electric motor, wherein the electric motor is powered by the electric energy system and the hydraulic pump pressurizes the hydraulic fluid to power one or more actuators, and wherein a prime mover of the refuse vehicle charges the electric energy system.

[0004] In some embodiments, the auxiliary power system includes a power take-off. In some embodiments, the auxiliary power system is positioned between a cab of the refuse vehicle and the body of the refuse vehicle. In some embodiments, the auxiliary power system is positioned below the body of the refuse vehicle. In some embodiments, the auxiliary power system is mounted on a surface of the body of the refuse vehicle. In some embodiments, the auxiliary power system includes a cooling system configured to thermally regulate the electric motor. In some embodiments, the auxiliary power system includes one or more electrical energy storage devices configured to power the electric motor.

[0005] Another embodiment relates to an auxiliary power system for a refuse vehicle including a reservoir to hold a hydraulic fluid, a hydraulic pump configured to pressurize the hydraulic fluid and provide the hydraulic fluid to one or more actuators, an electric motor configured to power the hydraulic pump, and a mounting assembly configured to couple the auxiliary power system to the refuse vehicle.

[0006] In some embodiments, the mounting assembly is configured to couple the auxiliary power system between a cab of the refuse vehicle and a body of the refuse vehicle. In some embodiments, the mounting assembly is configured to couple the auxiliary power system below a body of the refuse vehicle. In some embodiments, the mounting assembly is configured to couple the auxiliary power system to a surface of the body of the refuse vehicle. In some embodiments, the auxiliary power system further includes a power take-off. In some embodiments, the auxiliary power system further includes a cooling system configured to thermally regulate the electric motor. In some embodiments, the auxiliary power system further includes one or more electrical energy storage devices configured to power the electric motor.

[0007] Another embodiment relates to an electric refuse vehicle including a chassis, a body assembly coupled to the chassis, the body assembly defining a refuse compartment, a prime mover, wherein the prime mover is a first electric motor, and an auxiliary power system comprising a reservoir to hold a hydraulic fluid, and a hydraulic pump powered by a second electric motor, wherein the hydraulic pump pressurizes the hydraulic fluid to power one or more actuators.

[0008] In some embodiments, the electric refuse vehicle includes one or more electrical energy storage devices configured to provide power to at least one of the first electric motor or the second electric motor, and wherein at least one of the one or more electrical energy storage devices are detachably coupled to the electric refuse vehicle. In some embodiments, the auxiliary power system is positioned between a cab of the electric refuse vehicle and the body of the electric refuse vehicle. In some embodiments, the auxiliary power system includes a power take-off. In some embodiments, the auxiliary power system is positioned on a surface of the body of the electric refuse vehicle. In some embodiments, the auxiliary power system is positioned below the body of the electric refuse vehicle.

[0009] This summary is illustrative only and is not intended to be in any way limiting. Other aspects, inventive features, and advantages of the devices or processes described herein will become apparent in the detailed description set forth herein, taken in conjunction with the accompanying figures, wherein like reference numerals refer to like elements.

BRIEF DESCRIPTION OF THE DRAWINGS

[0010] FIG. **1** is a perspective view of a refuse vehicle, according to an exemplary embodiment.

[0011] FIG. **2** is the refuse vehicle of FIG. **1** having an auxiliary power system, according to an exemplary embodiment.

[0012] FIG. **3** is a block diagram of the auxiliary power system of FIG. **2**, according to an exemplary embodiment.

[0013] FIG. **4**A illustrates a power take-off that may be part of the auxiliary power system of FIG. **3**, according to an exemplary embodiment.

[0014] FIG. **4**B illustrates the power take-off of FIG. **4**A having a first coaxial ratio, according to an exemplary embodiment.

[0015] FIG. **4**C illustrates the power take-off of FIG. **4**A having a second coaxial ratio, according to an exemplary embodiment.

[0016] FIG. **5**A illustrates a placement of the auxiliary power system of FIG. **3** for a rear-loading refuse truck, according to an exemplary embodiment.

[0017] FIG. **5**B illustrates a placement of the auxiliary power system of FIG. **3** for a side-loading refuse truck, according to an exemplary embodiment.

[0018] FIG. **5**C illustrates a placement of the auxiliary power system of FIG. **3** for a front-loading refuse truck, according to an exemplary embodiment.

[0019] FIG. **5**D illustrates another placement of the auxiliary power system of FIG. **3** for a front-loading refuse truck, according to an exemplary embodiment.

DETAILED DESCRIPTION

[0020] Before turning to the figures, which illustrate certain exemplary embodiments in detail, it should be understood that the present disclosure is not limited to the details or methodology set forth in the description or illustrated in the figures. It should also be understood that the terminology used herein is for the purpose of description only and should not be regarded as limiting.

[0021] According to an exemplary embodiment, an auxiliary power system for a refuse vehicle is disclosed herein. The auxiliary power system of the present disclosure provides many advantages over conventional systems. The auxiliary power system may supply power for one or more components of the refuse vehicle. For example, the auxiliary power system may provide electric power to the body of the refuse vehicle, enabling the refuse vehicle to utilize electric actuators, reducing a need for hydraulic actuators, which are prone to leaking hydraulic fluid. Additionally or alternatively, the auxiliary power system may provide hydraulic power to an electric refuse vehicle. For example, an auxiliary power system supplying pressurized hydraulic fluid (via an electric hydraulic pump) may power one or more hydraulic components of the refuse vehicle. The auxiliary power system may be removable to supply power to a location disparate of the refuse vehicle. For example, the auxiliary power system may be integrated with a carry-can coupled to the refuse vehicle such that the auxiliary power system supplies power to the refuse vehicle while the carry-can is attached to the refuse vehicle and supplies power to the carry-can while the carry-can is detached from the refuse vehicle.

Overall Vehicle

[0022] As shown in FIG. **1**, a vehicle, shown as refuse vehicle **10** (e.g., a garbage truck, a waste collection truck, a sanitation truck, a recycling truck, etc.), is configured as a front-loading refuse truck. In other embodiments, the refuse vehicle **10** is configured as a side-loading refuse truck or a rear-loading refuse truck. In still other embodiments, the vehicle is another type of vehicle (e.g., a skid-loader, a telehandler, a plow truck, a boom lift, etc.). As shown in FIG. **1**, the refuse vehicle **10** includes a chassis, shown as frame **12**; a body assembly, shown as body **14**, coupled to the frame **12** (e.g., at a rear end thereof, etc.); and a cab, shown as cab **16**, coupled to the frame **12** (e.g., at a front end thereof, etc.). The cab **16** may include various components to facilitate operation of the refuse vehicle **10** by an operator (e.g., a seat, a steering wheel, actuator controls, a user interface, switches, buttons, dials, etc.).

[0023] As shown in FIG. **1**, the refuse vehicle **10** includes a prime mover, shown as electric motor **18**, and an energy system, shown as energy storage and/or generation system **20**. In other embodiments, the prime mover is or includes an internal combustion engine. According to the exemplary embodiment shown in FIG. **1**, the electric motor **18** is coupled to the frame **12** at a position beneath the cab **16**. The electric motor **18** is configured to provide power to a plurality of tractive elements, shown as wheels **22** (e.g., via a drive shaft, axles, etc.). In other embodiments, the electric motor **18** is otherwise positioned and/or the refuse vehicle **10** includes a plurality of electric motors to facilitate independently driving one or more of the wheels **22**. In still other embodiments, the electric motor **18** or a secondary electric motor is coupled to and configured to drive a hydraulic system that powers hydraulic actuators. According to the exemplary embodiment shown in FIG. **1**, the energy storage and/or generation system **20** is coupled to the frame **12** beneath the body **14**. In other embodiments, the energy storage and/or generation system **20** is otherwise positioned (e.g., within a tailgate of the refuse vehicle **10**, beneath the cab **16**, along the top of the body **14**, within the body **14**, etc.).

[0024] According to an exemplary embodiment, the energy storage and/or generation system **20** is configured to (a) receive, generate, and/or store power and (b) provide electric power to (i) the electric motor **18** to drive the wheels **22**, (ii) electric actuators of the refuse vehicle **10** to facilitate operation thereof (e.g., lift actuators, tailgate actuators, packer actuators, grabber actuators, etc.), and/or (iii) other electrically operated accessories of the refuse vehicle **10** (e.g., displays, lights, etc.). The energy storage and/or generation system **20** may include one or more rechargeable batteries (e.g., lithium-ion batteries, nickel-metal hydride batteries, lithium-ion polymer batteries, lead-acid batteries, nickel-cadmium batteries, etc.), capacitors, solar cells, generators, power buses, etc. In one embodiment, the refuse vehicle **10** is a completely electric refuse vehicle. In other embodiments, the refuse vehicle **10** includes an internal combustion generator that utilizes one or more fuels (e.g., gasoline, diesel, propane, natural gas, hydrogen, etc.) to generate electricity to charge the energy storage and/or generation system **20**, power the electric motor **18**, power the electric actuators, and/or power the other electrically operated accessories (e.g., a hybrid refuse vehicle, etc.). For example, the refuse vehicle **10** may have an internal combustion engine augmented by the electric motor **18** to cooperatively provide power to the wheels **22**. The energy storage and/or generation system **20** may thereby be charged via an on-board generator (e.g., an internal combustion generator, a solar panel system, etc.), from an external power source (e.g., overhead power lines, mains power source through a charging input, etc.), and/or via a power regenerative braking system, and provide power to the electrically operated systems of the refuse vehicle **10**. In some embodiments, the energy storage and/or generation system **20** includes a heat management system (e.g., liquid cooling, heat exchanger, air cooling, etc.).

[0025] According to an exemplary embodiment, the refuse vehicle **10** is configured to transport refuse from various waste receptacles within a municipality to a storage and/or processing facility (e.g., a landfill, an incineration facility, a recycling facility, etc.). As shown in FIG. **1**, the body **14** includes a plurality of panels, shown as panels **32**, a tailgate **34**, and a cover **36**. The panels **32**, the tailgate **34**, and the cover **36** define a collection chamber (e.g., hopper, etc.), shown as refuse compartment **30**. Loose refuse may be placed into the refuse compartment **30** where it may thereafter be compacted (e.g., by a packer system, etc.). The refuse compartment **30** may provide temporary storage for refuse during transport to a waste disposal site and/or a recycling facility. In some embodiments, at least a portion of the body **14** and the refuse compartment **30** extend above or in front of the cab **16**. According to the embodiment shown in FIG. **1**, the body **14** and the refuse compartment **30** are positioned behind the cab **16**. In some embodiments, the refuse compartment **30** includes a hopper volume and a storage volume. Refuse may be initially loaded into the

hopper volume and thereafter compacted into the storage volume. According to an exemplary embodiment, the hopper volume is positioned between the storage volume and the cab **16** (e.g., refuse is loaded into a position of the refuse compartment **30** behind the cab **16** and stored in a position further toward the rear of the refuse compartment **30**, a front-loading refuse vehicle, a side-loading refuse vehicle, etc.). In other embodiments, the storage volume is positioned between the hopper volume and the cab **16** (e.g., a rear-loading refuse vehicle, etc.).

[0026] As shown in FIG. **1**, the refuse vehicle **10** includes a lift mechanism/system (e.g., a front-loading lift assembly, etc.), shown as lift assembly **40**, coupled to the front end of the body **14**. In other embodiments, the lift assembly **40** extends rearward of the body **14** (e.g., a rear-loading refuse vehicle, etc.). In still other embodiments, the lift assembly **40** extends from a side of the body **14** (e.g., a side-loading refuse vehicle, etc.). As shown in FIG. **1**, the lift assembly **40** is configured to engage a container (e.g., a residential trash receptacle, a commercial trash receptacle, a container having a robotic grabber arm, etc.), shown as refuse container **60**. The lift assembly **40** may include various actuators (e.g., electric actuators, hydraulic actuators, pneumatic actuators, etc.) to facilitate engaging the refuse container **60**, lifting the refuse container **60**, and tipping refuse out of the refuse container **60** into the hopper volume of the refuse compartment **30** through an opening in the cover **36** or through the tailgate **34**. The lift assembly **40** may thereafter return the empty refuse container **60** to the ground. According to an exemplary embodiment, a door, shown as top door **38**, is movably coupled along the cover **36** to seal the opening thereby preventing refuse from escaping the refuse compartment **30** (e.g., due to wind, bumps in the road, etc.).

Auxiliary Power System

[0027] As shown in FIG. **2**, the refuse vehicle **10** includes an auxiliary power system **1410** coupled to the body **14** of the refuse vehicle **10**. The auxiliary power system **1410** provides power to one or more components of the refuse vehicle **10**. In some embodiments, the power is hydraulic power. Additionally or alternatively, the auxiliary power system **1410** may provide electric power. In some embodiments, the auxiliary power system **1410** is coupled to the energy storage and/or generation system **20** and receives electrical power therefrom. In some embodiments, the auxiliary power system **1410** includes batteries or other energy storage elements itself. In some embodiments, the auxiliary power system **1410** is coupled to a lower rearward panel of panels **32**. In some embodiments, the auxiliary power system **1410** is coupled to or integrated with the tailgate **34**. In some embodiments, the auxiliary power system **1410** is mounted on the lift assembly **40**. Additionally or alternatively, the auxiliary power system **1410** may be detachably coupled to the refuse vehicle **10**. For example, the auxiliary power system **1410** may be integrated with or power a carry-can coupled to the refuse vehicle **10**. Additionally or alternatively, the auxiliary power system **1410** may be a portable residential auxiliary power unit (APU). It should be understood that the auxiliary power system **1410** can be mounted anywhere on the refuse vehicle **10**.

[0028] In some embodiments, the auxiliary power system **1410** is coupled to a refuse vehicle having a diesel internal combustion engine prime mover. An internal combustion engine prime mover may charge one or more batteries of the auxiliary power unit **1410** or the energy storage and/or generation system **20**. For example, the internal combustion engine may include a power take-off to power an alternator to charge the one or more batteries. In some embodiments, the auxiliary power system **1410** may power one or more components of the body **14** of an internal combustion engine refuse vehicle. For example, the auxiliary power system **1410** may power one or more electric actuators to open/close the tailgate **34**. Additionally or alternatively, the auxiliary power system **1410** may augment or supplement the existing power system of a refuse vehicle. For example, the auxiliary power system **1410** may power one or more indicator lights of the refuse vehicle **10**. In some embodiments, the auxiliary power system **1410** includes one or more electrical energy storage devices (e.g., batteries, etc.).

[0029] In some embodiments, the auxiliary power system **1410** integrates or otherwise combines an electrical and a hydraulic system. For example, the auxiliary power system **1410** may provide electrical power to a motor to power the cover **36** and provide hydraulic power to an actuator of the tailgate **34**. Additionally or alternatively, the auxiliary power system **1410** may convert power from one system to another system. For example, the auxiliary power system **1410** may convert hydraulic power to stored potential energy for an electrical motor. As a further example, the auxiliary power system **1410** may convert stored electrical power into hydraulic power for a hydraulic system. In some embodiments, the auxiliary power system **1410** is or includes a power take-off.

[0030] As shown in FIG. **3**, the auxiliary power system **1410** may provide pressurized hydraulic fluid to actuators **1420**. The auxiliary power system **1410** includes a reservoir **1412** filled with a hydraulic fluid, such as oil. In some embodiments, the reservoir is filled with a different type and/or mixture of hydraulic fluid. For example, reservoir **1412** may be filled with water. The hydraulic fluid may be pressurized and/or pumped by a hydraulic pump **1414** powered by motor **1416** to supply the actuators **1420**. The hydraulic pump **1414** may be hydrostatic or hydrodynamic. The hydraulic pump **1414** may be a gear pump, a rotary vane pump, a screw pump, a bent axis pump, an inline axial piston pump, a radial piston pump, a peristaltic pump, or any other pump or combination thereof known in the art. The motor **1416** is an electric motor powered by the energy storage and/or generation system **20**. In some embodiments, the auxiliary power system **1410** includes one or more batteries or battery cells itself (e.g., to power the motor **1416**, etc.). The motor **1416** may be a mechanical commutator motor, an electronic commutator motor, an asynchronous machine type, a synchronous machine type, or any other type and/or combination thereof known in the art. In the case of a fully electric refuse vehicle, the auxiliary power system **1410** can provide hydraulic power to the fully electric refuse vehicle via the motor **1416**, the hydraulic pump **1414**, and the reservoir **1412**.

[0031] In some embodiments, the auxiliary power system **1410** includes an electrically controlled hydraulic swash plate coupled to one or more electronic sensors to throttle a flow of the hydraulic fluid to the actuators **1420**. In some embodiments, the auxiliary power system **1410** includes a different type, number, or combination of elements. For example, the auxiliary power system **1410** may include a first motor to provide power to the hydraulic pump **1414** and a second motor to provide a power take-off for powering an

external device. Additionally or alternatively, the auxiliary power system **1410** may include one or more power lines (e.g., a hydraulic line, an electrical cable, a compressed-air line, etc.) to provide external power. For example, the auxiliary power system **1410** may include a standard power cable as defined by the International Electrotechnical Commission (IEC) 60320 standard.

[0032] In various embodiments, the auxiliary power system **1410** includes a controller **1418** to control the auxiliary power system **1410**. The controller may receive control signals from the refuse vehicle **10** and/or external systems and provide control signals to components of the auxiliary power system **1410**. For example, the controller **1418** may monitor a level of hydraulic fluid in the reservoir **1412** and may operate one or more valves to control the flow of hydraulic fluid between the reservoir **1412** and the hydraulic pump **1414**. As a further example, the controller **1418** may monitor a pressure level of hydraulic fluid being supplied to the actuators **1420** and may adjust an operation of the motor **1416** and/or the hydraulic pump **1414** to control the pressure level of the hydraulic fluid. In various embodiments, the controller **1418** includes a processing circuit. For example, the controller **1418** may include a processing circuit having a processor and memory, the memory storing instructions thereon that, when executed by the processor, cause the processor to perform the various operations described herein. In some embodiments, the controller **1418** is configured to determine whether the auxiliary power system **1410** is connected to the refuse vehicle **10**. For example, the auxiliary power system **1410** may be integrated with a carry-can coupled to the refuse vehicle **10** and the controller **1418** may determine that the auxiliary power system **1410** is currently coupled to the refuse vehicle **10** and may operate the auxiliary power system **1410** in a first mode. To continue the previous example, the auxiliary power system **1410** may be decoupled from the refuse vehicle **10** and the controller **1418** may detect that the auxiliary power system **1410** is decoupled from the refuse vehicle **10** and may operate the auxiliary power system **1410** in a second mode.

[0033] In some embodiments, the auxiliary power system **1410** includes a cooling system **1430**. The cooling system **1430** may be configured to regulate a temperature of the auxiliary power system **1410**. For example, the cooling system **1430** may include water-cooling elements configured to capture thermal energy associated with the auxiliary power system **1410** and transport the thermal energy away from the auxiliary power system **1410** for dissipation. In some embodiments, the cooling system **1430** is an air cooling system. For example, the cooling system **1430** may use ambient air to cool the motor **1416**. Additionally or alternatively, the cooling system **1430** may be a liquid cooling system. For example, the cooling system **1430** may use engine coolant to cool the motor **1416**. In some embodiments, the cooling system **1430** includes a heat exchanger such as a radiator.

[0034] Referring now to FIGS. **4**A-**4**C, several embodiments of the auxiliary power system **1410** are shown, according to several exemplary embodiments. In some embodiments, the auxiliary power system **1410** includes a power take-off. In various embodiments, the hydraulic pump **1414** couples to the motor **1416**. In some embodiments, a first exchange **1500** integrates the hydraulic pump **1414** with the motor **1416**. In various embodiments, the exchange is a coaxial ratio. For example, the first exchange **1500** may convert a first gearing associated with the hydraulic pump **1414** to a second gearing associated with the motor **1416**. In some embodiments, the first exchange **1500** is a gear train. Additionally or alternatively, the first exchange **1500** may be or include a transmission. In various embodiments, the first exchange **1500** includes one or more interlocking gears. In some embodiments, the first exchange **1500** is configured to couple a component (e.g., a shaft, an axle, etc.) of the hydraulic pump **1414** to a component of the motor **1416**. In various embodiments, a component of the hydraulic pump **1414**, the motor **1416**, and the first exchange **1500** are aligned (e.g., as shown in FIG. **4**B). In some embodiments, a second exchange **1502** integrates the hydraulic pump **1414** with the motor **1416**. In various embodiments, the second exchange **1502** translates a force associated with a component in a first position (e.g., on a first plane, etc.) to a component in a second position (e.g., on a second plane, etc.). In various embodiments, the second exchange **1502** translates mechanical energy from a component of the hydraulic pump **1414** having a first alignment to a component of the motor **1416** having a second alignment (e.g., as shown in FIG. **4**C).

[0035] Referring now to FIGS. **5**A-**5**D, several placements of the auxiliary power system **1410** are shown, according to several exemplary embodiments. In various embodiments, the auxiliary power system **1410** includes a power take-off configured to supply power (e.g., electrical, mechanical, hydraulic, etc.) to refuse vehicle **10**. For example, the auxiliary power system **1410** may include a power take-off configured to provide hydraulic power to operate actuators of the tailgate **34**. In some embodiments, the auxiliary power system **1410** is positioned between the cab **16** and the body **14** of refuse vehicle **10** (e.g., as shown in FIGS. **5**A-**5**B). In some embodiments, positioning the auxiliary power system **1410** between the cab **16** and the body **14** is preferred for rear-loading and side-loading refuse trucks **10**. In some embodiments, the auxiliary power system **1410** is positioned on a side of the body **14**. For example, the auxiliary power system **1410** may be positioned on a rear quarter panel of panels **32** (e.g., as shown in FIG. **5**C). In various embodiments, positioning the auxiliary power system **1410** on a side of the refuse truck **10** facilitates easy access to the auxiliary power system **1410**. In some embodiments, the auxiliary power system **1410** is positioned on an underside of the body **14** (e.g., as shown in FIG. **5**D). In various embodiments, the auxiliary power system **1410** may be mounted to the frame **12**. It should be understood that auxiliary power system **1410** may be positioned anywhere on refuse vehicle **10**.

[0036] As utilized herein, the terms "approximately," "about," "substantially", and similar terms are intended to have a broad meaning in harmony with the common and accepted usage by those of ordinary skill in the art to which the subject matter of this disclosure pertains. It should be understood by those of skill in the art who review this disclosure that these terms are intended to allow a description of certain features described and claimed without restricting the scope of these features to the precise numerical ranges provided. Accordingly, these terms should be interpreted as indicating that insubstantial or inconsequential modifications or alterations of the subject matter described and claimed are considered to be within the scope of the disclosure as recited in the appended claims.

[0037] It should be noted that the term "exemplary" and variations thereof, as used herein to describe various embodiments, are intended to indicate that such embodiments are possible examples, representations, or illustrations of possible embodiments (and such terms are not intended to connote that such embodiments are necessarily extraordinary or superlative examples).

[0038] The term "coupled" and variations thereof, as used herein, means the joining of two members directly or indirectly to one another. Such joining may be stationary (e.g., permanent or fixed) or moveable (e.g., removable or releasable). Such joining may be achieved with the two members coupled directly to each other, with the two members coupled to each other using a separate intervening member and any additional intermediate members coupled with one another, or with the two members coupled to each other using an intervening member that is integrally formed as a single unitary body with one of the two members. If "coupled" or variations thereof are modified by an additional term (e.g., directly coupled), the generic definition of "coupled" provided above is modified by the plain language meaning of the additional term (e.g., "directly coupled" means the joining of two members without any separate intervening member), resulting in a narrower definition than the generic definition of "coupled" provided above. Such coupling may be mechanical, electrical, or fluidic.

[0039] References herein to the positions of elements (e.g., "top," "bottom," "above," "below") are merely used to describe the orientation of various elements in the FIGURES. It should be noted that the orientation of various elements may differ according to other exemplary embodiments, and that such variations are intended to be encompassed by the present disclosure.

[0040] The hardware and data processing components used to implement the various processes, operations, illustrative logics, logical blocks, modules and circuits described in connection with the embodiments disclosed herein may be implemented or performed with a general purpose single- or multi-chip processor, a digital signal processor (DSP), an application specific integrated circuit (ASIC), a field programmable gate array (FPGA), or other programmable logic device, discrete gate or transistor logic, discrete hardware components, or any combination thereof designed to perform the functions described herein. A general purpose processor may be a microprocessor, or, any conventional processor, controller, microcontroller, or state machine. A processor also may be implemented as a combination of computing devices, such as a combination of a DSP and a microprocessor, a plurality of microprocessors, one or more microprocessors in conjunction with a DSP core, or any other such configuration. In some embodiments, particular processes and methods may be performed by circuitry that is specific to a given function. The memory (e.g., memory, memory unit, storage device) may include one or more devices (e.g., RAM, ROM, Flash memory, hard disk storage) for storing data and/or computer code for completing or facilitating the various processes, layers and modules described in the present disclosure. The memory may be or include volatile memory or non-volatile memory, and may include database components, object code components, script components, or any other type of information structure for supporting the various activities and information structures described in the present disclosure. According to an exemplary embodiment, the memory is communicably connected to the processor via a processing circuit and includes computer code for executing (e.g., by the processing circuit or the processor) the one or more processes described herein.

[0041] The present disclosure contemplates methods, systems and program products on any machine-readable media for accomplishing various operations. The embodiments of the present disclosure may be implemented using existing computer processors, or by a special purpose computer processor for an appropriate system, incorporated for this or another purpose, or by a hardwired system. Embodiments within the scope of the present disclosure include program products comprising machine-readable media for carrying or having machine-executable instructions or data structures stored thereon. Such machine-readable media can be any available media that can be accessed by a general purpose or special purpose computer or other machine with a processor. By way of example, such machine-readable media can comprise RAM, ROM, EPROM, EEPROM, or other optical disk storage, magnetic disk storage or other magnetic storage devices, or any other medium which can be used to carry or store desired program code in the form of machine-executable instructions or data structures and which can be accessed by a general purpose or special purpose computer or other machine with a processor. Combinations of the above are also included within the scope of machine-readable media. Machine-executable instructions include, for example, instructions and data which cause a general purpose computer, special purpose computer, or special purpose processing machines to perform a certain function or group of functions.

[0042] Although the figures and description may illustrate a specific order of method steps, the order of such steps may differ from what is depicted and described, unless specified differently above. Also, two or more steps may be performed concurrently or with partial concurrence, unless specified differently above. Such variation may depend, for example, on the software and hardware systems chosen and on designer choice. All such variations are within the scope of the disclosure. Likewise, software implementations of the described methods could be accomplished with standard programming techniques with rule-based logic and other logic to accomplish the various connection steps, processing steps, comparison steps, and decision steps.

[0043] It is important to note that the construction and arrangement of the refuse vehicle **10** and the systems and components thereof as shown in the various exemplary embodiments is illustrative only. Additionally, any element disclosed in one embodiment may be incorporated or utilized with any other embodiment disclosed herein. Although only one example of an element from one embodiment that can be incorporated or utilized in another embodiment has been described above, it should be appreciated that other elements of the various embodiments may be incorporated or utilized with any of the other embodiments disclosed herein.

1. A refuse vehicle, comprising:

a chassis;

a body assembly coupled to the chassis, the body assembly defining a refuse compartment;

an electric energy system; and

an auxiliary power system comprising a reservoir to hold a hydraulic fluid, and a hydraulic pump powered by an electric motor, wherein the electric motor is powered

by the electric energy system and the hydraulic pump pressurizes the hydraulic fluid to power one or more actuators; and

wherein a prime mover of the refuse vehicle charges the electric energy system.

2. The refuse vehicle of claim **1**, wherein the auxiliary power system includes a power take-off.

3. The refuse vehicle of claim **1**, wherein the auxiliary power system is positioned between a cab of the refuse vehicle and the body of the refuse vehicle.

4. The refuse vehicle of claim **1**, wherein the auxiliary power system is positioned below the body of the refuse vehicle.

5. The refuse vehicle of claim **1**, wherein the auxiliary power system is mounted on a surface of the body of the refuse vehicle.

6. The refuse vehicle of claim **1**, wherein the auxiliary power system includes a cooling system configured to thermally regulate the electric motor.

7. The refuse vehicle of claim **1**, wherein the auxiliary power system includes one or more electrical energy storage devices configured to power the electric motor.

8. An auxiliary power system for a refuse vehicle, comprising:

a reservoir to hold a hydraulic fluid;

a hydraulic pump configured to pressurize the hydraulic fluid and provide the hydraulic fluid to one or more actuators;

an electric motor configured to power the hydraulic pump; and

a mounting assembly configured to couple the auxiliary power system to the refuse vehicle.

9. The auxiliary power system of claim **8**, wherein the mounting assembly is configured to couple the auxiliary power system between a cab of the refuse vehicle and a body of the refuse vehicle.

10. The auxiliary power system of claim **8**, wherein the mounting assembly is configured to couple the auxiliary power system below a body of the refuse vehicle.

11. The auxiliary power system of claim **8**, wherein the mounting assembly is configured to couple the auxiliary power system to a surface of the body of the refuse vehicle.

12. The auxiliary power system of claim **8**, further including a power take-off.

13. The auxiliary power system of claim **8**, further including a cooling system configured to thermally regulate the electric motor.

14. The auxiliary power system of claim **8**, further including one or more electrical energy storage devices configured to power the electric motor.

15. An electric refuse vehicle, comprising:

a chassis;

a body assembly coupled to the chassis, the body assembly defining a refuse compartment;

a prime mover, wherein the prime mover is a first electric motor; and

an auxiliary power system comprising a reservoir to hold a hydraulic fluid, and a hydraulic pump powered by a second electric motor, wherein the hydraulic pump pressurizes the hydraulic fluid to power one or more actuators.

16. The electric refuse vehicle of claim **15**, wherein the electric refuse vehicle includes one or more electrical energy storage devices configured to provide power to at least one of the first electric motor or the second electric motor, and wherein at least one of the one or more electrical energy storage devices are detachably coupled to the electric refuse vehicle.

17. The electric refuse vehicle of claim **15**, wherein the auxiliary power system is positioned between a cab of the electric refuse vehicle and the body of the electric refuse vehicle.

18. The electric refuse vehicle of claim **15**, wherein the auxiliary power system includes a power take-off.

19. The electric refuse vehicle of claim **15**, wherein the auxiliary power system is positioned on a surface of the body of the electric refuse vehicle.

20. The electric refuse vehicle of claim **15**, wherein the auxiliary power system is positioned below the body of the electric refuse vehicle.

* * * * *