L. W. DOWNES.

MAGNETIC CHUCK.

APPLICATION FILED APR. 22, 1911.

1,105,552.

Patented July 28, 1914.

Fig. 1.

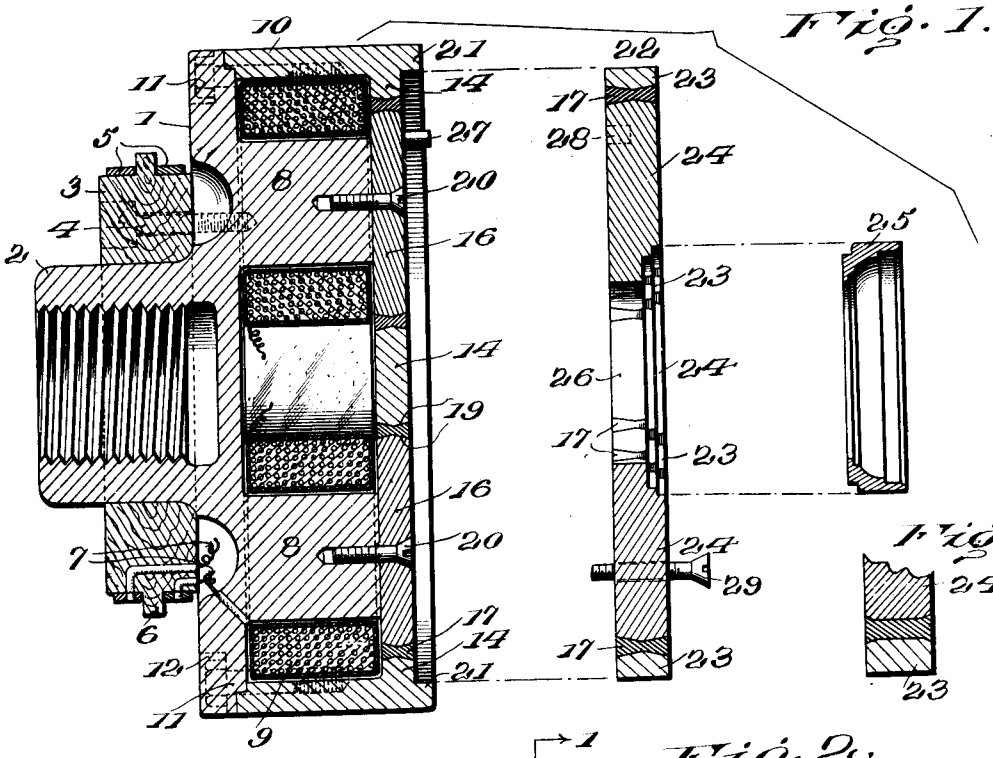

Fig. 3.

Fig. 2.

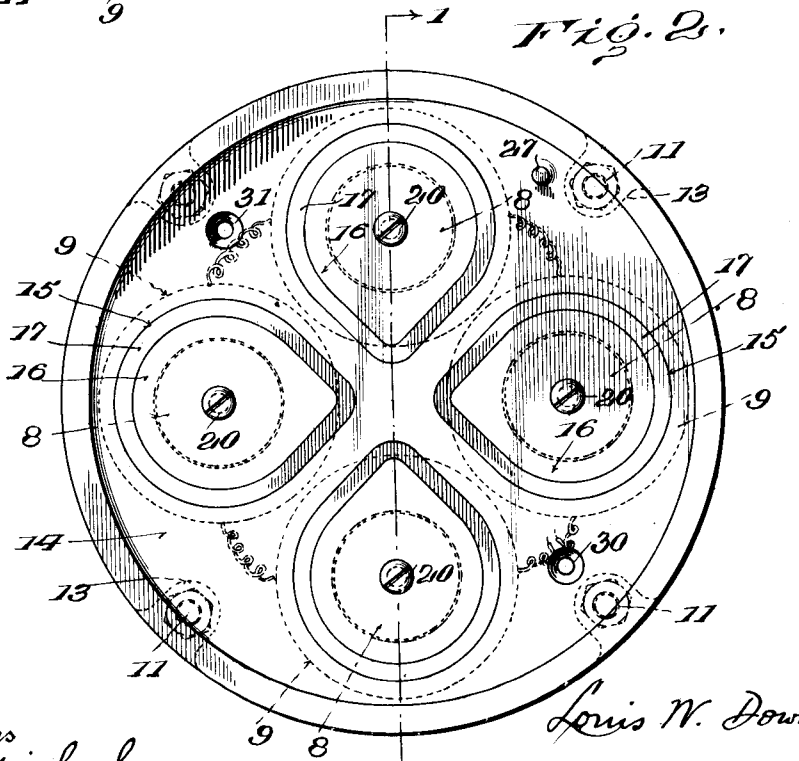

Witnesses

R. C. Fitzhugh.

E. E. Warfield

Inventor

Louis W. Downes,

By Munn, Cameron, Lewis & Massie

Attorneys.

UNITED STATES PATENT OFFICE.

LOUIS W. DOWNES, OF PROVIDENCE, RHODE ISLAND.

MAGNETIC CHUCK.

1,105,552. Specification of Letters Patent. Patented July 28, 1914.

Application filed April 22, 1911. Serial No. 622,674.

To all whom it may concern:

Be it known that I, LOUIS W. DOWNES, of Providence, Rhode Island, have invented a new and useful Improvement in Magnetic Chucks, which invention is fully set forth in the following specification.

This invention relates to improvements in magnetic chucks and has for its primary object to provide means whereby the same chuck may be enabled to hold pieces of work of different sizes and shapes without the intervention of special clamping devices.

While my improvements are applicable to magnetic chucks in general, they will be described in connection with a rotary magnetic chuck having a casing constituting one pole and a plurality of magnet cores which constitute a multiple and opposite pole, energized by interchangeable magnet coils which are adapted to be slipped on and off the cores thereby avoiding the necessity of rewinding the cores in case of accident. Such arrangement of coils forms the subject-matter of my copending application Serial No. 573,114, filed July 21, 1910.

In machining certain kinds of work such as grinding the interior of ball-bearing rings, it has heretofore been the practice to sink a recess in the faces of the magnetic chuck to receive and center the ring and prevent lateral or radial motion while the magnetic flux holds the work or ring against the chuck face. Different sized pieces of work necessitate the use of different magnetic chucks having faces to correspond with such work. This necessitates a varied and extensive stock of such chucks to be kept on hand to meet the demands of the trade while locking up considerable idle capital. By aid of my improvement a single magnetic chuck may be used to machine pieces of work widely varying in size and form. To this end, I provide a plurality of plates which are adapted to fit a standard size chuck and to be held on its face in any desired manner but preferably by one or more screws holding the plate to the surface of the chuck. Each of these plates comprises sections or areas of magnetic material separated magnetically by non-magnetic material such as by solder, brass, bronze or other non-magnetic material which also acts to hold the sections together. Each section of magnetic material in the plate in a general way corresponds to a positive or negative area of the face of the chuck and constitutes therefore an extension thereof when mounted in operative position on the chuck face which presents a plurality of pole areas of like polarity grouped about a central space. These areas are tapered or elongated or so shaped as to permit of their extension into this central space and are each surrounded by a pole area of opposite polarity. Different extension plates have different size recesses or openings which are adapted to receive the particular size ring or piece of work to be machined. For convenience, these extension plates are made with standard sizes of openings for receiving corresponding sizes of rings or pieces of work as determined by trade conditions. To facilitate the proper registry of the extension plate with the corresponding magnetic elements of the face of the chuck, registering means are provided, such as a pin and socket, arranged one on the plate and the other on the chuck face. It is apparent that these pole extension plates need not be circular but may be of any external contour and that the recess in the plate for holding the work may also be of any shape to correspond to the shape of the work to be machined.

Another feature of my invention resides in the shape and arrangement of the polar sections or areas of the pole plates whereby the magnetic flux is distributed over the surface of the chuck face to enable the face to be energized practically over all portions so that work of varying sizes and shapes may be readily held in working position.

A further feature resides in the form of seam for securing the magnetic sections together whereby the face of the holding plate may be cut away without materially interfering with the efficiency of the seam in holding the parts together.

The invention may assume a variety of mechanical expressions one of which is illustrated in the accompanying drawings which are designed merely for the purpose of illustration and not as limiting the invention, reference being had to the claims for this purpose.

In the drawings: Figure 1 is a view in longitudinal section through a revoluble magnetic chuck, a pole extension plate separated from the chuck and a piece of work to be held thereby. Fig. 2 is a front face

view of the chuck with the extension pole plate removed, showing the form of the pole pieces, and Fig. 3 is a modified detail view.

In Fig. 1 is illustrated a revoluble magnetic chuck in which 1 is a base plate provided with an interiorly threaded projection 2 for receiving the nose of a driving member, not shown, and for supporting a collar 3 of insulating material secured in position by one or more screws 4 entering the base plate. Slip rings 5, 5 of copper or other conducting material are mounted on collar 3 and held out of contact from each other by a raised portion 6 of the collar material. These rings receive the current from a suitable source and deliver the same by magnet coil leads 7, 7. Base plate 1 is provided with cores 8, four in number as illustrated, which are shown as integral with the base but they may be separate therefrom and secured thereto in any suitable manner. Each core is provided with an energizing coil 9 which is preferably constructed in a manner to enable its ready removal and replacement by a new coil in case of injury. The magnet coils are inclosed by a casing 10 one end of which is secured to the base plate 1 by screws or bolts 11 which pass through countersunk openings 12 in the base plate and engage housings 13 shown in dotted outline, Fig. 2. The face end wall 14 of the casing 10 is provided with heart-shaped openings 15 corresponding in number with the magnet cores and positioned over them with the narrowed part of the opening extending inward. Each magnet core at its free end is provided with a heart-shaped pole piece 16 which corresponds in outline with the opening 15 in the end wall 14, but is smaller for the purpose of leaving a gap 17 around each pole piece for receiving non-magnetic material. This material may be of any non-magnetic alloy or non-magnetic metal. Brass, bronze or solder may be used with good results. It is to be noticed that the periphery of each pole plate 16 and that of the surrounding opening in wall 14 are provided with dihedral edges 19. By reason of this conformation of the edges of the pole pieces and the openings in the wall 14 for receiving the pole pieces a gap is formed capable of retaining and holding the non-magnetic material which may be poured into the gaps in a molten state or it may be cast or punched separately and afterward expanded by pressure or hammering so as to completely fill the space between the heart-shaped pole piece and the casing 14 of the chuck or frame 23 of the extension plate 22. This non-magnetic material also acts to interrupt the magnetic circuit traced through the pole pieces 16, magnet cores 8, base 1, side walls of the casing and face wall 14. The pole pieces 16 are preferably further secured by screws 20 which engage the ends of the cores 8 thereby giving greater rigidity to the whole structure. The side wall of the casing 10 may, and preferably does, extend slightly beyond the face wall 14 into a rim 21 which aids in retaining the interchangeable pole extension plates 22 when in position for receiving work.

The description of one extension plate will answer for each of the series, as the several plates only differ in the size and form of the central openings into which the work pieces fit. The pole extension plate is a work holding plate and is built up of sections corresponding to the number of magnet poles of the chuck, each section being separated by a gap from its neighbor by non-magnetic material such as solder which also serves to hold the sections together. In Fig. 1 is shown a transverse section of such a plate 22 in which 23 designates the body portion or frame of the plate adapted to fit within the rim or ledge 21 of the chuck and form a polar extension of the end wall 14. Plate 22 is provided with openings, in the present instance four in number, to correspond with the four pole pieces 16 each opening being heart or egg-shaped with its narrow end directed toward the center of the plate and into which openings are held by non-magnetic material or metal in the manner above described, pole extension pieces 24 conforming in outline with pole pieces 16. The work-holding plate as illustrated is designed for holding a ring such as ring 25 which is to be interiorly ground. This plate, therefore, is machined out to have a recess conforming in contour to the periphery of the ring 25 or to such portion thereof as requisite to form a holding socket for the work piece 25. The central portion of the plate 22 is also bored out to form a clearance space 26 for the end of the grinding tool which is to be used on the work.

In order that the plate may properly register with the pole pieces 16, a pin 27 is provided on the face of wall 14 and a socket 28 is sunk in the work holding plate 22. The thickness of the latter plate may vary to suit the nature of the work and the central opening 26 may vary in size for the same reason or in certain instances may be dispensed with, depending whether the grinding operation is to take place entirely on the exterior of the work, but I prefer to provide this clearance space as it permits of a wide range of usefulness of the work holding plate. The plate is provided with means for securing it to the face wall 14 of the chuck such as by screws 29 passing through suitable openings in the plate and engaging screw threaded openings 30 and 31 in wall 14.

Assuming that the parts of the magnetic chuck are assembled as shown in the drawing with the energizing coils in series and

the terminals of the windings connected to the slip rings 5, the work holding plate 22 is secured by the means described to the face of the chuck with its socket 28 engaging pin 27 in position to receive the work piece 25 and to close the magnetic circuit. The pole extension pieces 24 registering with pole pieces 16 constitute a plurality of magnet poles of like polarity and the frame 23 constitutes a single and opposite pole separated from its companion poles by the gaps filled with non-magnetic material 17. When the coils are energized the magnetic circuit includes pole pieces 16, pole extension pieces 24, work piece 25, frame 23 of work-holding plate 22, casing wall 10, cores 8 back to pieces 16. By reason of the peculiar arrangement and shape of the pole extension pieces 24 with their projecting portions directed inwardly, the magnetic field is centrally distorted toward the center of the pole extension plate 22. This construction permits small pieces of work to be held and reduces the dead space at the center of the chuck to a minimum.

It will thus be apparent that by my improvement, a single magnetic chuck is enabled by means of a plurality of pole extension pieces or work holding plates to hold pieces of different size and configuration without providing different magnetic chucks for different kinds of work as hitherto practised.

It will be further seen that another considerable advantage of this method of holding work is the elimination of all centering or clamping devices. Such centering and clamping devices where used in the ordinary form of chuck, not infrequently distort the shape of the piece to be ground so that on removal from the chuck after the grinding or machining operation, it will be found out of true. By the simple method of boring out the extension plate on the chuck itself to the proper size, the work is accurately centered, no clamping plate is necessary and distortion of the work cannot occur.

Instead of providing the chuck with a plurality of energizing coils, a single magnetizing coil may be used and still retain certain advantages of my invention in that the same chuck is adapted to hold work of different kinds by use of different pole extension plates.

In Fig. 3, I have shown a slightly modified form of cementing joint prepared by beveling off the edges of the pole pieces to form truncated edges instead of dihedral edges as appear in the previously described joint 17. I prefer, however, to construct the joint with edges tapering from the center line of the plate for by this means the plate can be bored out to practically any depth up to the center without loosening the elements.

What I claim is:—

1. In combination, a magnetic chuck, a separable work-holding plate therefor comprising a plurality of magnetic sections secured together by non-magnetic material and having a work holding recess, said sections constituting pole extensions of the chuck.

2. In a magnetic chuck, the combination of a casing of magnetic material forming one pole of a magnet, a magnet core therein and means for energizing said core, a separable work-holding plate having a work-holding recess and adapted to be held by said magnet poles and comprising magnetic sections secured together by non-magnetic material and corresponding in number with the magnet poles of said chuck.

3. In combination, a magnetic chuck provided with a plurality of magnet cores and means for energizing the same and a separable work-holding plate having a work-holding recess and adapted to be retained by said chuck when in working position and provided with a plurality of magnetic sections secured together by non-magnetic material and constituting pole extensions of said chuck.

4. In combination, a magnetic chuck, a work-holding plate adapted to be retained thereon when in working position, comprising a plurality of magnetic sections secured together by non-magnetic material and having a central opening for the purpose described.

5. In combination, a plurality of magnet cores having coils for energizing them, a casing in the magnetic circuit of said cores surrounding the same and extending beyond their free ends to form a retaining rim and a work-holding plate adapted to be retained in working position within said rim and comprising a plurality of magnetic sections secured together by non-magnetic material.

6. In combination, a plurality of magnet cores having coils for energizing the same, a casing in the magnetic circuit of said cores and having an end wall provided with openings elongated toward the center of the chuck face, pole pieces of similar outline with said openings, held therein by non-magnetic material and a removable work-holding plate comprising sections of magnetic material separated by non-magnetic material, said sections corresponding in outline with and constituting extensions of the poles of said magnetic chuck.

7. In combination, a magnetic chuck having a holding face presenting a plurality of pole sections tapered toward a center and surrounded by a pole area of opposite polarity and a separable work holding plate presenting magnetic elements corresponding in form and area with said first named sections and adapted to register with the

same to extend the main magnetic circuit of said chuck.

8. A work-holding plate for a magnetic chuck, comprising a plate of magnetic material and having openings, pole extension pieces in said openings held therein by non-magnetic material and a clearance space centrally located in said plate.

9. A work-holding plate for a magnetic chuck, comprising a plate of magnetic material and having openings, pole extension pieces in said openings secured therein by non-magnetic material, one face of said plate having a cut-away portion including areas of different polarity for receiving and holding work to be machined.

10. A work-holding plate for a magnetic chuck comprising a plate of magnetic material and having openings, pole extension pieces in said openings secured therein by non-magnetic material, one face of said plate having a cut-away portion including areas of different polarity for receiving and holding work to be machined and a clearance space within said areas for the purpose described.

11. In a work-holding plate for a magnetic chuck, a plurality of pole sections having beveled edges and a seam of non-magnetic material embracing said edges and holding said sections together and a cut-away portion on one face of said plate including areas of different polarity for holding work to be machined.

12. A magnetic chuck having a plurality of individually energized magnet cores provided with heart-shaped pole faces of one polarity and grouped about a center, a pole face of opposite polarity having heart-shaped openings for receiving said pole faces, the lobes of said faces being directed centrally to distort the magnetic flux toward the center of the holding face.

13. A magnetic chuck having a plurality of pole-faces of one polarity and each tapered toward a center about which they are grouped, means for energizing said pole-faces and a pole face of opposite polarity having openings for receiving said first-named pole faces, respectively.

14. In a magnetic chuck, a plurality of magnet cores arranged about a common axis, tapered pole pieces individual to said cores, a casing supporting said cores and provided with an end wall having tapered openings for receiving said pole pieces and a separable work-holding plate compris ing a skeleton frame and tapered sections held in said frame by non-magnetic material, the elements of said plate being adapted to register with the elements of said chuck face.

15. A magnetic chuck comprising a casing having an end wall plate presenting pole faces and a separable work-holding plate comprising a plurality of magnetic sections secured together by non-magnetic material, and a rim on one of said plates for retaining the work-holding plate in position on the chuck.

16. In combination, a magnetic chuck having a work-holding face plate presenting poles of both polarities, a separable supplemental work-holding plate extending the poles of the chuck, and a rim on one of said parts within which the other part fits.

17. In combination, a magnetic chuck having a plurality of pole faces of one po larity and each tapered toward a center about which they are grouped, means for energizing said pole faces, a pole face of opposite polarity having openings for receiving said first-named pole faces, and a separable work-holding plate comprising a frame and tapered sections held in said frame by non-magnetic material, the elements of said plate being adapted to register with the elements of said chuck face.

In testimony whereof I have signed this specification in the presence of two subscribing witnesses.

LOUIS W. DOWNES.

Witnesses:
M. S. SISSON,
GEORGE W. STEERE.