May 7, 1946. G. W. GLOVER 2,399,920

ELECTRIC SWITCH

Filed Sept. 25, 1944

Fig. 1.

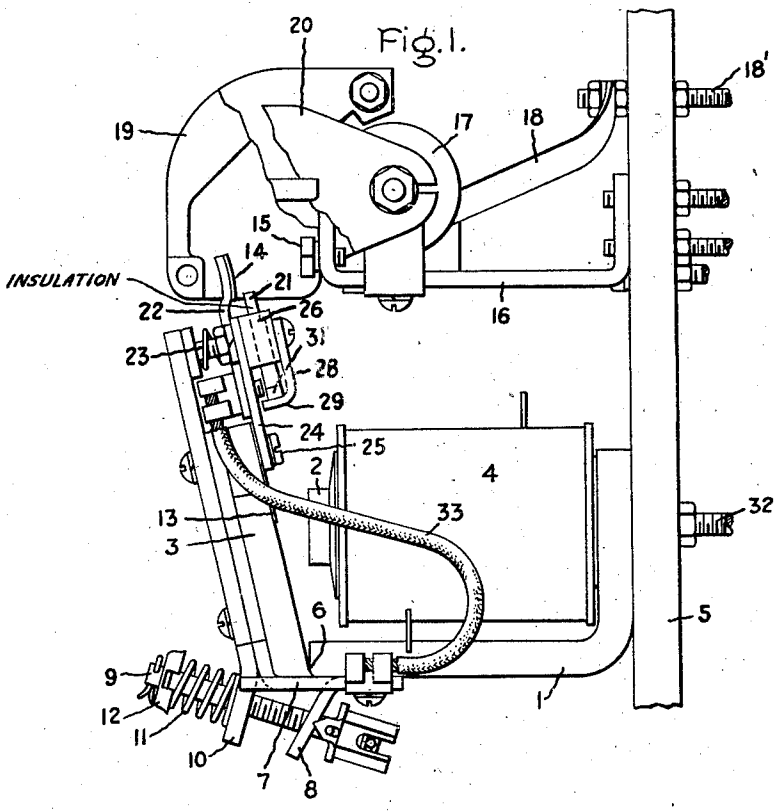

Fig. 2.

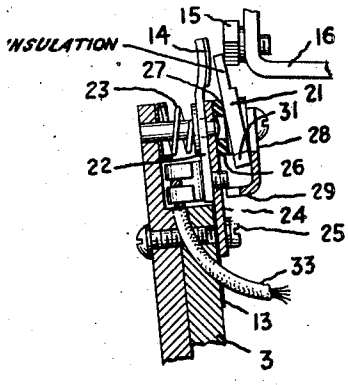

Fig. 3.

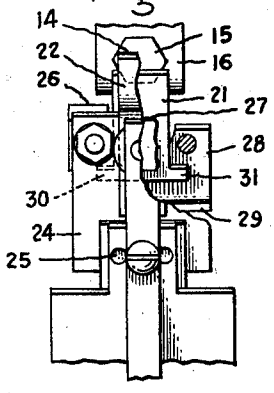

Inventor:
George W. Glover,
by Harry E. Dunham
His Attorney.

Patented May 7, 1946 2,399,920

UNITED STATES PATENT OFFICE

2,399,920

ELECTRIC SWITCH

George W. Glover, Schenectady, N. Y., assignor to General Electric Company, a corporation of New York

Application September 25, 1944, Serial No. 555,655

3 Claims. (Cl. 200—153)

My invention relates to electric switches, more particularly to electromagnetically operated switches of the type known as contactors, and has for its object simple, reliable and inexpensive means for preventing the closure of the switch by heavy shocks.

In carrying out my invention in one form, I provide a small shock responsive member made of an electrically insulating material which is carried on the movable switch member and which is normally biased by gravity to a position in which it does not interfere with the closure of the switch. This member is slidably mounted for movement lengthwise of the movable switch member in such manner that it is moved by a shock applied to the switch in front of the movable switch contact so as to be interposed between it and the stationary contact and prevent closure of the switch by the shock.

For a more complete understanding of my invention, reference should be had to the accompanying drawing, Fig. 1 of which is a side elevation view of an electromagnetically operated switch or contactor embodying my invention; Fig. 2 is a fragmentary side elevation view partly in section showing the shock responsive member in its switch closure preventing position; while Fig. 3 is a fragmentary front elevation view partly broken away showing the parts in the same relative position as Fig. 2.

Referring to the drawing, I have shown my invention in one form as applied to a contactor comprising a U-shaped magnet core 1, one arm of which is a cylinder and provided with a pole face 2 for a pivoted armature 3. An operating coil 4 is mounted on the cylindrical core arm, the core member being mounted on a panel support 5 made of electrically insulating material. The armature 3 made of magnetic material is pivotally mounted on its lower edge 6 on a plate 7 secured to the lower side of the magnet core 1. A central portion 8 of the plate 7 is bent downward to provide a support for a spring biasing pin 9 which extends through a hole in the portion 8 and through a hole in the bracket member 10 secured to the armature. The armature is biased by a helical spring 11 surrounding the rod 9 and having one end engaging a seat 12 on the rod, and its other end engaging the bracket 10. Thus the spring applies a compression force normally biasing the armature to its unattracted position shown.

When the coil 4 is energized, the armature moves about its pivot 6 into engagement with the pole face 2 except for an air gap provided by the shim 13 made of non-magnetic material, such as brass. In moving to its attracted position, the armature moves a movable contact 14 on its upper movable end into engagement with a stationary contact 15. This stationary contact is mounted on a bracket 16 secured to the panel 5. A blowout coil 17 is mounted on the bracket 16 which is connected by a conductor 18 between the terminal 18′ and the support 16 to which the opposite end of the blowout coil is electrically connected, the stationary contact 15 being also electrically connected with the support 16. A suitable arc chute 19 made of electrically insulating, heat refractory material is provided for the contacts with a magnetic pole plate 20 on each side associated with the blowout coil whereby a magnetic field is provided across the arc chute.

In accordance with my invention, I provide a shock responsive or inertia member 21 made of an electrically insulating, heat refractory material, such as a hard fibre, which is mounted on the armature 3 in a position normally, as shown in Fig. 1, with its upper end just below the movable contact 14 so as to offer no interference with the engagement of the contact 14 with the stationary contact 15 when the coil 4 is energized. This shock responsive member 21 is mounted for slidable movement lengthwise of the armature away from the pivot of the armature so that, in the event of a shock applied to the support 5 and the switch, when the switch is open and the armature 3 in its unattracted position, the member 21 is thrown upward to the position shown in Figs. 2 and 3 from its gravity biased position by any component of the shock tending to move the armature toward its attracted position. The member 21 has a very small inertia as compared with the inertia of the armature and the switch contact and other parts carried by it, and, as a result, its movement in response to a severe shock from its lowermost unlatched position shown in Fig. 1 to its uppermost latched position shown in Figs. 2 and 3 is faster than the movement of the armature toward its attracted position. Moreover, the member 21 moves only a short distance to its interference position of Figs. 2 and 3 as compared with the movement of the armature to its closed circuit position. As a result, the member 21 is thrown upward to the interference position of Figs. 2 and 3 by any component of a shock force which throws the armature toward its attracted position. In this interference position the upper end of the member 21 is in front of the contact engaging face of the movable contact, i. e.,

between the contacts, and thereby prevents closure of the switch by a shock. It will be understood that when the switch is closed by the coil 4 the member 21 remains in the lowermost position.

Referring to additional details of construction, the movable contact 14 is mounted on a short arm 22 which normally is held by a compression spring 23 against a plate 24, the lower end of which is secured by screws 25 to the upper end of the armature. Thus the armature and arm 22 together constitute a pivoted switch arm. The shock responsive member 21 is secured to the right-hand side of the plate 24 by means of a bar 26 made of electrically insulating material which is secured to the upper end of the plate 24, in transverse relation therewith. This bar has a notch cut in its right-hand side, as seen in Figs. 1 and 2, through which the member 21 extends. As shown in Fig. 2, this notch is considerably deeper horizontally than the thickness of the member 21, there remaining a relatively thin portion 27 of the bar 26 at the bottom of the notch. Moreover, the notch is somewhat wider than the member 21, i. e., in a horizontal direction as seen in Fig. 3. On the right-hand side of the bar 26, as seen in Figs. 1 and 2, is secured a plate 28 which extends across the notch in the bar and forms a right-hand wall for the notch. The lower end of the plate 28 has a portion 29 bent over toward the left hand on which the member 21 normally rests in accordance with its gravity bias. A semicircular notch is provided in the upper end of the plate 28 for the purpose of increasing the electric clearance with respect to the stationary contact. Also, at its lower end the member 21 is provided with laterally extending projections 30 and 31 which engage the side walls of the slot when the member is thrown to its uppermost position, as seen in Figs. 2 and 3.

As shown, an electric connection can be made with the movable contact 14 by means of a terminal 32 which is actually a bolt securing the magnet core 1 to the panel 5. From the magnet core 1 a flexible conductor 33 extends to the member 22 on which the movable contact is mounted.

While I have shown a particular embodiment of my invention, it will be understood, of course, that I do not wish to be limited thereto, since many modifications may be made and I, therefore, contemplate by the appended claims to cover any such modifications as fall within the true spirit and scope of my invention.

What I claim as new and desire to secure by Letters Patent of the United States is:

1. A switch comprising a movable switch member provided with a movable contact, a stationary contact engageable by said movable contact, and an inertia member made of electrically insulating material movably mounted on said switch member and biased to a predetermined position to provide for normal movement of said movable contact into engagement with said stationary contact but moving in response to a shock applied to said switch to a position between said contacts thereby to prevent the engagement of said contacts by the shock.

2. A switch comprising a movable support, a movable contact on said support, a stationary contact engageable by said movable contact upon movement of said support, a member made of electrically insulating material mounted on said support for movement over the face of said movable contact, said member being normally biased out of engagement with said contact face but moving in response to a shock applied to said switch to a position over said contact face thereby to prevent the engagement of said contacts by a shock.

3. A switch comprising a pivoted arm, a movable contact on the movable end of said arm, a stationary contact engageable by said movable contact, means for moving said arm on its pivot to move said movable contact into engaged and disengaged relation with said stationary contact, and an inertia member made of electrically insulating material mounted on said contact arm for slidable movement lengthwise of said arm over the face of said movable contact, said inertia member being normally biased toward the pivot of said arm into a position out of engagement with said contact but moving in response to a shock applied to said switch to a position over said contact face thereby to prevent the engagement of said contacts by a shock.

GEORGE W. GLOVER.