(12) UK Patent Application (19) GB (11) 2 060 059 A

(21) Application No **8029243**
(22) Date of filing **10 Sep 1980**
(30) Priority data
(31) **80475**
(32) **1 Oct 1979**
(33) **United States of America (US)**
(43) Application published **29 Apr 1981**
(51) **INT CL³ F01N 1/02**
(52) Domestic classification **F1B** F201 F206 F239 F244 F247 F248 F320 FB
(56) Documents cited **None**
(58) Field of search **F1B**
(71) Applicants **General Motors Corporation, 3044 West Grand Boulevard, Detroit, Michigan 48202, United States of America**
(72) Inventors **Dwight Allen Blaser, David Jason Goding**
(74) Agent **J. N. B. Breakwell, Grosvenor Gardens House, 35—37 Grosvenor Gardens, London SW1W 0BS**

(54) **Compact exhaust silencer for diesel locomotives**

(57) The silencer 32 includes an offset duct 34 having two oppositely curved sharply angled bends 38 and 40, leading to a roof outlet opening 44 and providing broadband high frequency sound level reduction, combined with a Helmholtz resonator 48. The resonator consists of a chamber 50 and a connector tube 52 extending from the duct 34 downwardly into the chamber and tuned with the cavity to the sound frequency at which maximum silencing is desired, preferably the predominant firing frequency in the engine noise spectrum at full speed and load.

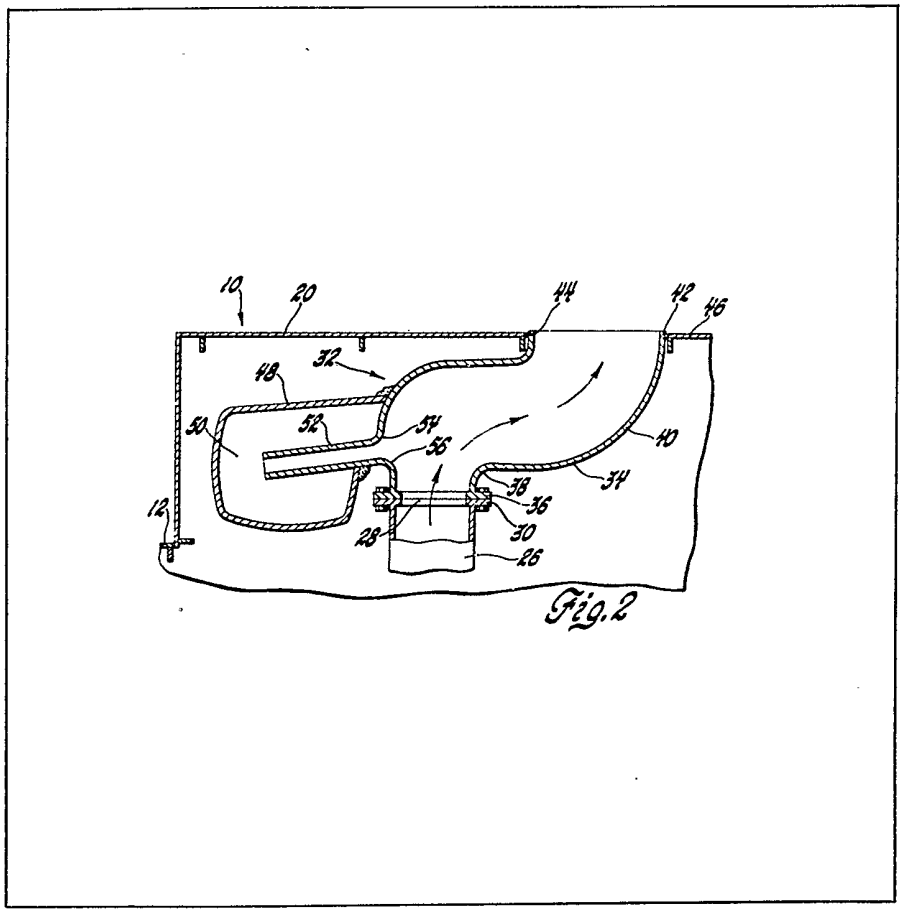

Fig.2

GB 2 060 059 A

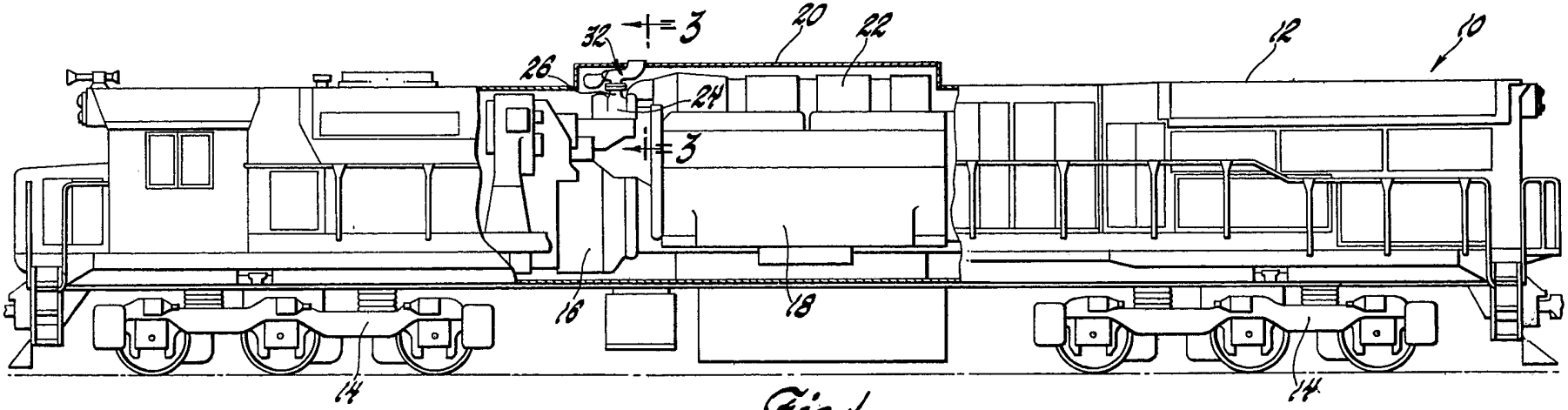

Fig.1

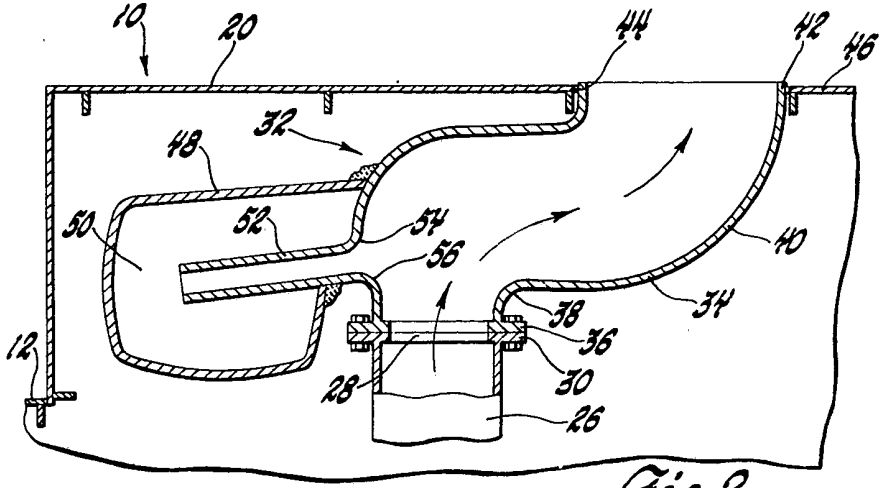

Fig.2

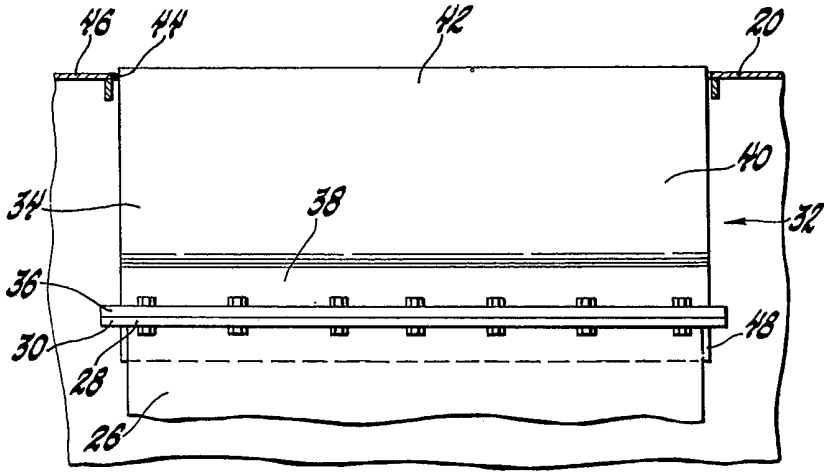

Fig.3

SPECIFICATION

Compact exhaust silencer for diesel locomotives

This invention relates to engine exhaust silencers and more particularly to a compact silencer arrangement particularly applicable to diesel locomotives.

Throughout the early history of railway locomotives both steam and diesel powered, there was relatively little use of engine exhaust silencers or mufflers. There was some use of mufflers on special locomotives for use in mines and other enclosed applications and spark arresting devices not especially intended for sound reduction have been extensively applied in the past.

With the advent of turbocharging of diesel powered locomotives, it was observed that directing the exhaust gases through the turbine had the effect of reducing the transmitted sound levels of certain frequencies of exhaust noise so that the exhaust from turbocharged locomotives appeared to be quieter than that from naturally aspirated locomotives. More recently however, the desire for further reductions in artificially produced noise in the environment has led to the availability of exhaust silencing devices for both turbocharged and naturally aspirated locomotives designed for domestic use, that is use in the United States of America.

There is currently available in the United States of America an exhaust silencer designed for use with turbocharged diesel powered railway locomotives having a single elongate exhaust outlet, opening upwardly from the turbine. This silencer includes a dual bend offset outlet conduit, defining a passage that provides broadband sound reduction in the medium and high frequency range, combined with a large tank-like chamber surrounding the lower portion of the outlet conduit and connected thereto by perforations through the conduit wall, so as to provide sound reduction in the lower frequency ranges.

Recently, it has been desired to provide an exhaust silencer of similar effectiveness for turbocharged diesel-powered export model locomotives sold for overseas use. However, because of the lower exterior height of the export model locomotives, designed to meet the lower clearance requirement of many overseas railways, the space available within the engine hood section of the locomotive carbody of the export locomotives is not adequate to permit application of the previously designed domestic locomotive exhaust silencer arrangement.

According to the present invention there is provided a compact exhaust silencer for use with diesel locomotives having a single elongate exhaust outlet with limited clearance space from the outlet to the locomotive body wall, said silencer comprising;

a mounting base connectable to the exhaust outlet and defining an opening of greater length than width,

a close coupled duct with two oppositely curving sharply angled bends extending from said base to an outlet opening spacing axially from the base and to one side thereof in the direction of the narrow sides of the base, said duct bends providing broadband reduction of high frequency exhaust noise by forming an indirect path for sound propagation to the outlet,

a compact Helmholtz resonator chamber disposed along the side of said duct opposite to said one side toward which the outlet is offset, and

a connector tube opening through said opposite duct side near the base and extending into said chamber in a direction generally opposite the direction of offset of the main duct to encompass a mass of gas tuned to the volume of said chamber to dampen exhaust noise at a desired frequency for maximum silencing effect under predetermined operating conditions.

The present invention provides a new compact exhaust silencer arrangement having sound reduction capabilities similar in character to those of the currently available silencer for United States railway locomotives but suitable for application in the much smaller clearance space available in turbocharged diesel-powered export type locomotives, as well as in other applications wherein limited clearance space may be available between a single exhaust outlet and the adjacent carbody closure panel.

A feature of the present invention is that it includes a close coupled offset exhaust conduit having a generally rectangular cross-section and offset in the narrow direction of the rectangular area through a dual bend passage that provides broadband sound reduction at frequencies above 500 Hertz by forming an indirect path for sound propagation to the outlet that results in dissipation by requiring multiple reflections off the duct walls and some reflections back toward the silencer inlet.

A further feature of the invention is the additional provision of a Helmholtz type cavity resonator which includes a moderately sized chamber secured near the base of the outlet duct on the side opposite the direction of duct offset and a wide connector tube extending from the outlet duct near its base into the resonator chamber, the tube size and length being related to the volume of the chamber to provide a tuning of natural frequency that corresponds with the frequency at which maximum silencing is desired, preferably the predominant firing frequency in the engine exhaust noise spectrum at full speed and load.

In the drawing:

Figure 1 is a side elevational view of a turbocharged engine powered diesel locomotive with portions broken away to show the engine with an exhaust silencer formed in accordance with the invention;

Figure 2 is an enlarged view of the exhaust silencer mounting portion of Figure 1 wherein the silencer is shown in longitudinal section to illustrate its interior construction, and

Figure 3 is a fragmentary cross-sectional view from the plane indicated by the line 3—3 of Figure 1 to further illustrate the construction and installation of the exhaust silencer.

Referring now to the drawing in detail, numeral 10 generally indicates a six axle railway locomotive for export and constructed in a manner generally representative of commercial export type locomotives of relatively low profile. Locomotive 10 includes a carbody 12 supported on two six axle motor driven railway bogies 14 powered by an electric generator 16 coupled to a diesel engine 18 mounted within the carbody 12. The carbody includes a raised central portion 20 which provides clearance for an engine exhaust manifold 22 that collects exhaust gases from the engine cylinders and directs them into the turbine of a turbocharger 24 mounted on one end of the engine.

The turbocharger has an exhaust gas outlet member 26 that terminates in an upwardly opening rectangular exhaust outlet 28 having a surrounding flange 30, the exhaust outlet and flange being relatively narrow in the longitudinal direction of the locomotive and much wider in the transverse direction. A relatively limited space exists within the raised central portion above and on either side of the exhaust outlet and its associated mounting flange 30.

In order to provide the desired silencing in accordance with the invention, the locomotive 10 is provided with a compact engine exhaust silencer formed in accordance with the invention and generally indicated by numeral 32. Silencer 32 includes a passage defining an outlet duct 34 having a lower flange 36 that is mounted on the flange 30 of the turbocharger exhaust outlet. The duct 34 extends upwardly from the flange to a close coupled sharply curved right angle bend at 38, at which point the flange is offset in longitudinal direction toward the rear of the locomotive. The duct then turns upwardly at a second sharply curved right angle bend 40, terminating in a short upwardly facing end section 42 that protrudes through an opening 44 formed in the upper wall 46 of the raised central portion of the locomotive carbody. The longitudinal offset of the outlet duct 34 is such that sound waves emanating from the turbocharger exhaust outlet 28 into the duct are reflected by the duct walls at least twice before leaving from the opening in the end section 42.

The compact character of the construction in the vertical direction is illustrated by the fact that, in the illustrated embodiment, the height of the duct from the base flange 36 to the end 42 is less than half the width of the duct 34 in its lateral direction.

On the forward side of the outlet duct, opposite the direction of offset, the exhaust silencer is provided with a tank-like enclosure 48 forming a Helmholtz resonator chamber 50. The chamber forming enclosure 48 extends forwardly of the main duct, filling available space within the locomotive carbody raised portion and having a lateral (side-to-side) length in the locomotive equal to the lateral width of the outlet duct 34. The chamber 50 is connected to the interior of the outlet duct 34 by a connector tube 52 which extends slightly downwardly from the front side of the outlet duct for a predetermined length into the cavity. Tube 52 is relatively narrow in its vertical extent, but has a lateral width substantially equal to the width of the outlet duct.

The volume of the resonator chamber 50 and the volume within the connector tube 52 are preselected by proper dimensioning of these items to operate in accordance with known Helmholtz resonator principles in which the gas in the chamber acts as a spring and the gas within the tube acts as a mass vibrating against the spring.

The inner end 54 of the upper side of the tube 52 is stepped in slightly from the corresponding end 56 of the lower side to reduce interference of the main gas flow in the outlet duct 34 with the effective length of the vibrating mass in the connector tube 52.

By proper sizing, the natural frequency of the chamber and tube combination is made to correspond with the frequency at which maximum silencing is desired. This frequency is preferably the predominant firing frequency in the engine exhaust noise spectrum when the engine is operating at full speed and load. It would, however, be possible to select another resonant frequency for tuning of the chamber if desired.

In operation, the offset outlet duct portion with its back-to-back dual ninety degree bends provides broadband sound reduction at frequencies above about 500 Hertz through the provision of an indirect path for sound propagation to the outlet. This results in dissipation of some of the sound by requiring multiple reflections of the exhaust gases off the duct walls in order to reach the outlet. Further, some of the sound is reflected back toward the silencer inlet. In addition, the Helmholtz resonator on the front of the outlet duct provides additional silencing particularly in and near the natural frequency of the resonating system, which preferably corresponds with the predominant firing frequency in the exhaust noise spectrum of the engine at full speed and load. The overall effect is to provide reductions in transmitted noise from the engine exhaust roughly equivalent to the reductions obtained by the much larger chamber type silencer previously made available for domestic road-type locomotives but in a much more compact package that can be fitted within the limited space available in lower height export railway locomotives.

CLAIMS

1. A compact exhaust silencer for use with diesel locomotives having a single elongate exhaust outlet with limited clearance space from the outlet to the locomotive body wall, said silencer comprising;

a mounting base connectable to the exhaust outlet and defining an opening of greater length than width,

a close coupled duct with two oppositely curving sharply angled bends extending from said base to an outlet opening spaced axially from the base and to one side thereof in the direction of the narrow sides of the base, said duct bends providing broadband reduction of high frequency exhaust noise by forming an indirect path for sound propagation to the outlet,

a compact Helmholtz resonator chamber disposed along the side of said duct opposite to said one side toward which the outlet is offset, and

a connector tube opening through said opposite duct side near the base and extending into said chamber in a direction generally opposite the direction of offset of the main duct to encompass a mass of gas tuned to the volume of said chamber to dampen exhaust noise at a desired frequency for maximum silencing effect under predetermined operating conditions.

2. A compact exhaust silencer according to claim 1, wherein the compact Helmholtz resonator chamber has a length dimension not substantially less than and co-extensive with the width of said opposite side of said duct, and the connector tube has a width substantially equal to that of said duct opposite side.

3. A compact exhaust silencer according to claim 1 or 2 wherein said connector tube and resonator are sized for maximum silencing at the predominant firing frequency in the engine noise spectrum at full engine speed and load.

4. A compact exhaust silencer according to any preceding claim wherein the length of said mounting base and said resonator chamber and the associated width of said duct and said connector tube are more than twice the height of said duct outlet from said base.

5. A compact exhaust silencer as claimed in any preceding claim wherein the inner end of the side of the connector tube away from the mounting base is stepped away from the flow stream in the duct relative to the corresponding end of the side of the connector tube toward the mounting base to reduce interference of the main gas flow in the duct with vibration of the air mass in the connector tube.

6. A compact exhaust silencer substantially as hereinbefore particularly described with reference to and as shown in the accompanying drawing.

Printed for Her Majesty's Stationery Office by the Courier Press, Leamington Spa, 1981. Published by the Patent Office, 25 Southampton Buildings, London, WC2A 1AY, from which copies may be obtained.