United States Patent [19]

Sussman

[11] **3,712,312**

[45] **Jan. 23, 1973**

[54] **SELF-SUFFICIENT FINGER-NAIL TREATMENT SALON**

[75] Inventor: **Morris Sussman,** Freeport, Long Island, N.Y.

[73] Assignee: **Shore Plastics, Inc.,** Freeport, N.Y.

[22] Filed: **April 21, 1971**

[21] Appl. No.: **136,053**

[52] **U.S. Cl.** **132/73.6**

[51] **Int. Cl.** **A45h 29/05**

[58] **Field of Search** 34/90, 91, 202, 243; 350/315, 350/318, 311; 132/73.6

[56] **References Cited**

UNITED STATES PATENTS

3,287,824	11/1966	Selditz	34/202
2,687,669	8/1954	Bolsey	350/315
2,147,314	2/1939	Percy	132/73

Primary Examiner—Louis G. Mancene
Assistant Examiner—J. O. Lever
Attorney—Michael Ebert

[57] **ABSTRACT**

A self-sufficient finger-nail treatment salon in which the user is supplied with bottles of nail polish, nail-working tools, and means to illuminate the nails with light rays simulating the environmental conditions under which the nails will be exposed. The salon includes a console housing a bulb whose rays are selectively filtered to provide the desired illumination, and a blower drawing air heated by the bulb and directing it through an open-ended duct whose upper wall serves as a work counter for applying polish to the nails, the heated air discharged from the duct being used to dry the applied nail polish.

6 Claims, 3 Drawing Figures

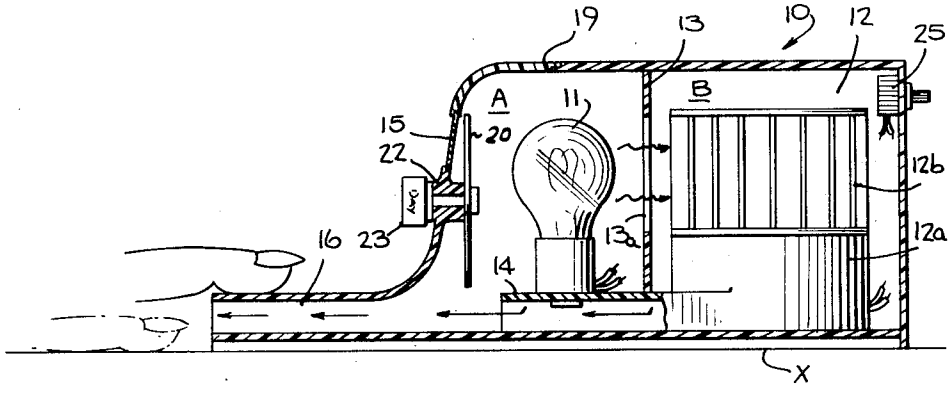

Fig. 1.

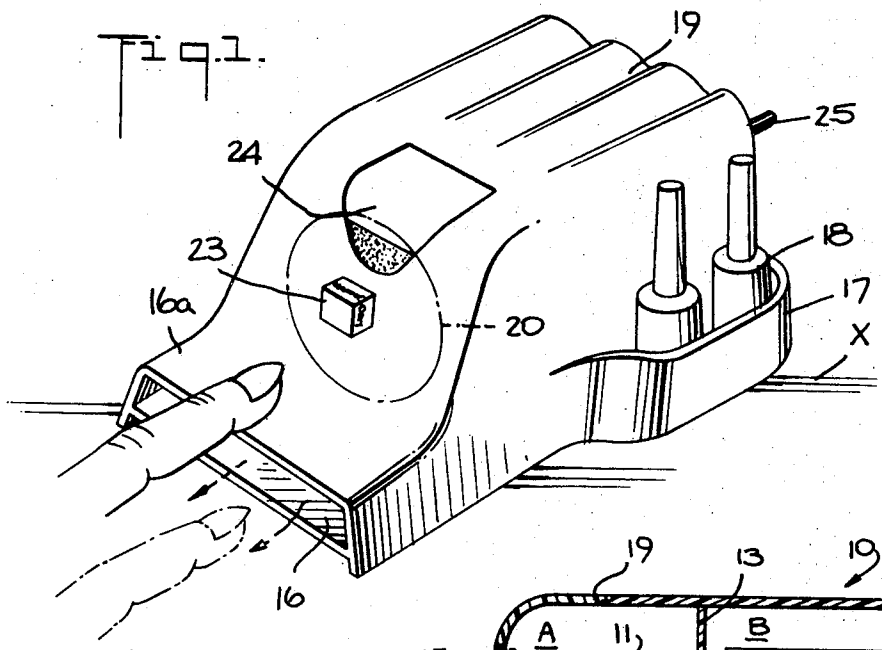

Fig. 3.

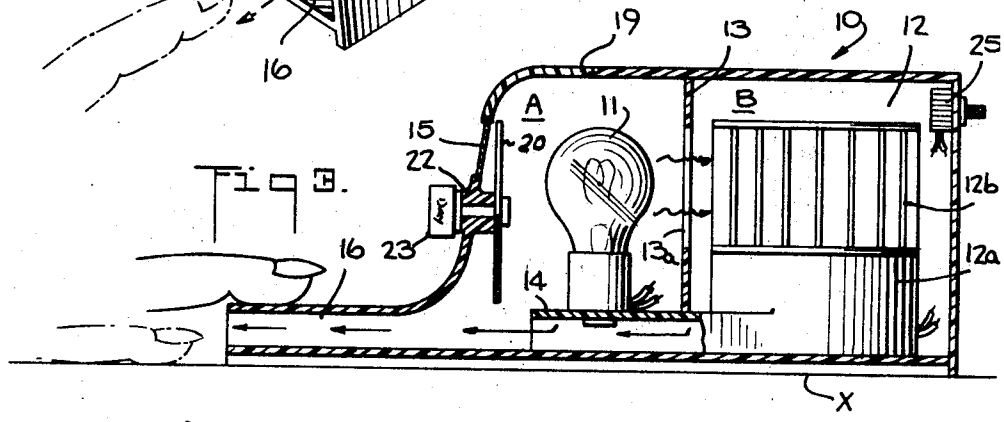

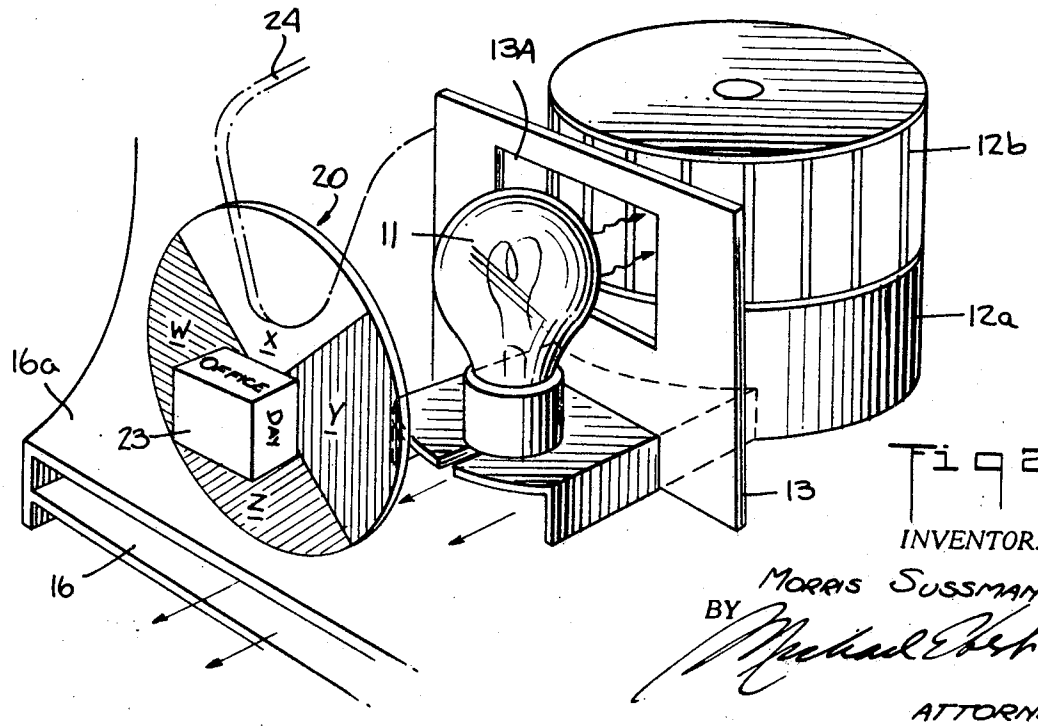

Fig. 2.

INVENTOR.
MORRIS SUSSMAN
BY
ATTORNEY

SELF-SUFFICIENT FINGER-NAIL TREATMENT SALON

BACKGROUND OF THE INVENTION

This invention relates generally to apparatus for adorning finger-nails, and more particularly to a self-sufficient finger-nail treatment salon.

The care or adornment of finger-nails involves the use of various tools and pieces of equipment, such as nail files, scissors and bottles of nail polish, as well as suitable lights for illuminating the nails being treated. Since a dressing-table is usually crowded with cosmetic jars, brushes and a variety of beauty appliances, it is sometimes difficult when conditioning the finger-nails to locate in the welter of material scattered on the table and to bring together all of the necessary pieces of finger-nail equipment.

Moreover, when nail polish is applied to the finger-nails, the choice of pigment or shade depends on the environment in which the nails are to be exposed. For example, when a woman makes up for a social event to be conducted outdoors, her choice of cosmetics and nail polish is influenced by the fact that the environmental illumination in this instance will be natural sunlight. Her choice of shade will be quite different when the expected illumination is that existing in a dimly-lit cocktail lounge or in an office having high-intensity artificial lighting.

Since nail polish is generally applied in a bathroom or bedroom illuminated by incandescent bulbs, it is difficult to judge the shade and color of the applied nail polish, for the color or shade of the polish as it appears under artificial illumination, which may give emphasis to the yellow or blue region in the light spectrum, is not the effect the same polish will impart under different lighting conditions. Consequently, a polish applied under a bedroom light, which appears to be subdued, may seem excessively bright or even gaudy under natural light.

Lighting appliances are available which are capable of selectively changing the character of illumination to simulate a range of environmental conditions so that one may choose a nail polish appropriate to the occasion. And since nail polish takes the form of an enamel in a volatile carrier, commercial dryers are available to accelerate the evaporation of the wet polish. But when one enumerates all of the pieces of equipment necessary to condition and polish finger-nails, it is evident that the resultant aggregation is quite impressive.

Though a well-organized woman may succeed in segregating those pieces from other forms of cosmetic paraphernalia, the usual experience is one of confusion and disorder as well as loss of time.

SUMMARY OF THE INVENTION

In view of the foregoing, it is the main object of this invention to provide a self-sufficient finger-nail treatment salon fully equipped with all of the necessary tools and adapted selectively to illuminate the nails under treatment with light simulating the environment to which the nails are to be exposed, and also emitting a stream of heated air to effect drying of the wet polish.

More specifically, it is an object of the invention to provide a salon of the above type, including a console housing a bulb affording illumination for the finger-nails being treated, the bulb also serving as a heater, the resultant heated air being directed by a blower onto the fingers at a position below a treatment counter, whereby wet polish on the nails may be quickly dried.

Also an object of the invention is to provide a console whose housing encloses said bulb and blower, and having galleries or balconies to accomodate nail-polish bottles, the roof of the console being shaped to receive nail-working tools, whereby all equipment necessary to carry out all aspects of nail conditioning is made available in a single compact unit constituting a finger-nail treatment salon.

Yet another object of the invention is to provide a console of the above type, which may be manufactured and sold at relatively low cost.

Briefly stated, these objects are accomplished in a nail-treatment salon including a console enclosing a light bulb and a blower, the console having a forwardly-projecting open-ended duct section having a rectangular cross-section, which duct is slightly raised above the ground plane and communicates with the blower, whereby air heated by the bulb is directed through the duct to effect a drying action with respect to a finger placed on the ground plane.

The upper wall of the duct section serves as a work counter upon which the user may place her fingers for polishing, a window being provided in the front wall of the console to expose the fingers being treated to the light of the bulb. Rotatably mounted behind the front wall is a multi-segment light filter, the arrangement being such that a selected segment may be interposed between the bulb and the window to filter the rays illuminating the fingers, each segment having a distinctive optical band-pass characteristic, whereby the illumination simulates a range of environment conditions, such as domestic lighting, office lights, natural sunlight, etc.

The sides of the console are formed with balconies to accommodate bottles of nail polish of different shades, whereas the roof of the console is corrugated or otherwise shaped to receive nail-working tools.

OUTLINE OF THE DRAWING

For a better understanding of the invention as well as other objects and further features thereof, reference is made to the following detailed description to be read in conjunction with the accompanying drawing, wherein:

FIG. 1 is a perspective view of a salon in accordance with the invention;

FIG. 2 is an interior view of the salon; and

FIG. 3 is a longitudinal section taken through the salon.

DESCRIPTION OF THE INVENTION

Referring now to the drawing, a finger-nail treatment salon in accordance with the invention includes a console, generally designated by numeral **10**, within which is housed an electric light bulb **11** and a blower **12**. The interior of the console is divided by a partition **13** into a front compartment A and a rear compartment B. Bulb **11** is supported in front compartment A on a platform **14** which raises the bulb so that its rays emanate through a window **15** in the front wall of the console.

Blower **12** is placed in rear compartment B and is constituted by a motor **12***a* and a turbine **12**b which act to draw air heated by bulb **11** in compartment A into compartment B through an opening **13**c in partition **13**.

Integral with console **10** and projecting forwardly therefrom is an open-ended duct **16** having a rectangular cross-section, the duct being slightly raised above the ground plane indicated by X. Duct **16** communicates with compartment B through a passage below platform **14**, whereby air heated in compartment A and drawn into compartment B is blown out of the console through the duct in a broad stream.

Because bulb **11** is incandescent, it generates substantial heat as well as light, hence warm air is available within a relatively short time after the bulb is energized.

On either side of console **10** and integral therewith are galleries or balconies, one of which **17** is shown in FIG. **1**. Placed within each gallery are bottles **18** of nail polish, each bottle containing nail enamel of a specific color and shade and being provided with a removable cap having an applicator attached thereto. The top wall or roof **19** of the console is corrugated or otherwise shaped to accommodate nail files, scissors or other nail-working tools, so that the user of the console is afforded all necessary equipment and, in effect, has a self-sufficient finger-nail beauty salon.

Mounted behind the front wall of the console is a multi-segment filter disc **20**, the disc being supported by an axle **21** rotatable in a hub **22** formed in the front wall. The axle projects through the front wall and secured to the end thereof is a four-sided knob **23**, each side being related to a respective one of the four segments W, X, Y, and Z of disc **20**.

The arrangement is such that by turning the knob one may interpose a particular filter segment between window **15** and bulb **11** in compartment A. Each segment has a given optical band-pass characteristic so that one may simulate the illumination of the intended environment.

For example, a standard incandescent bulb produces a somewhat yellow light and in order to de-emphasize the yellow component and to stress the blue component in the emitted rays so as to simulate the white rays produced by natural light, one segment may be in the form of a bluish filter, this segment being associated with a knob side bearing the legend "Day." Hence, when the knob is placed so that the "Day" side is up, the blue filter is in place, and simulated daylight is available. In this way the user is able to see the effect of a given polish under daylight conditions.

Obviously, the nature of the filter depends on the character of the bulb, and with a high-intensity light bulb, such as a bulb operated at high temperature above its rated voltage, the light generated thereby is whiter than that ordinarily produced. A removal hatch **24** in the front compartment makes it possible to readily replace the bulb.

For bright artificial light conditions, such as found in a commercial office, one may use a yellow filter segment and for soft lighting, such as is encountered in cocktail lounges and restaurants, an amber filter is appropriate. But for a home environment in which illumination is produced by bulbs similar to those installed in the console, the filter segment in this instance is clear, for the light values need not be modified. These filter choices are merely by way of example and it will be evident that the invention may use more than three or four filter segments.

The upper wall **16***a* of duct **16** serves as a work counter on which the user may place her fingers to be polished. The finger, after it is painted with enamel, is then placed on the ground plane below the exhaust of duct **16** so that it may be quickly dried. The bulb and blower motor are connected to a power line or battery through a switch **25**.

The console may be molded or otherwise formed of a suitable high-strength synthetic plastic material or any other substance.

While there has been shown and described a preferred embodiment of a self-sufficient finger-nail treatment salon, in accordance with the invention, it will be understood that many changes and modifications may be made therein without departing from the spirit of the invention.

I claim:

1. A self-sufficient finger-nail treatment salon comprising:

A. a console having a forwardly projecting, open-ended duct having a rectangular cross-section, the upper wall of the duct serving as a work-counter, the front wall of the console having a window therein,

B. an incandescent bulb disposed in said console to produce rays passing through said window to illuminate the nails of fingers placed on said counter,

C. selective filter means interposed in the path of said rays to produce illumination simulating the illumination of the environment in which said nails are to be exhibited, and

D. blower means in said console to draw air heated by said bulb and to direct it through said duct to effect drying of wet nails placed in front of said duct.

2. A salon as set forth in claim **1**, wherein said duct is slightly raised relative to the ground plane, whereby fingers placed on said plane have their nails in the mainstream of the heated air discharged by the duct.

3. A salon as set forth in claim **1**, wherein said salon includes galleries on the sides thereof to accommodate bottles of nail polish.

4. A salon as set forth in claim **1**, wherein said filter means is constituted by a multi-segment disc, each segment having different optical filter characteristics.

5. A salon as set forth in claim **1**, further including a partition separating said bulb from said blower in said console to define front and rear compartments, said partition having an opening therein whereby warm air from the compartment containing the bulb is drawn into the compartment containing the blower communicating with said duct.

6. A salon as set forth in claim **1**, wherein the roof of the console is corrugated to form channels for receiving nail-working tools.

* * * * *