# United States Patent

**Bell**

[15] **3,686,874**

[45] **Aug. 29, 1972**


[54] **CAP PULL FOR A MINING FRAME PROP OF AN ADVANCING PIT SUPPORT**


[72] Inventor: **Gunter Bell,** Horneburg, Germany

[73] Assignee: **Klockner-Werke AG,** Duisburg, Germany



[22] Filed: **May 28, 1971**

[21] Appl. No.: **148,083**

[30] **Foreign Application Priority Data**

June 3, 1970 Germany.....P 20 27 299.5

[52] **U.S. Cl.** .....**61/45 D**

[51] **Int. Cl.** .....**E21d 17/10**

[58] **Field of Search**.....61/45 D; 299/31, 33; 91/170 MP; 248/357



[56] **References Cited**

UNITED STATES PATENTS

| | | | |
|---|---|---|---|
| 3,333,425 | 8/1967 | Hemard | 61/45 D |
| 3,376,707 | 4/1968 | Dommann | 61/45 D |
| 3,383,868 | 5/1968 | Wilkenloh et al | 61/45 D |

FOREIGN PATENTS OR APPLICATIONS

| | | | |
|---|---|---|---|
| 834,976 | 5/1960 | Great Britain | 61/45 D |



*Primary Examiner*—Dennis L. Taylor

*Attorney*—Malcolm W. Fraser



[57] **ABSTRACT**

A cap pull for a frame prop of an advancing pit support in which the cylinder of the drive piston unit is arranged substantially parallel to the front frame prop and to the supporting force of the breasting cap. The maximum force of the breasting cap is limited by a shear pin arrangement in the connection between the drive piston unit supported in the frame cap and the lever supporting the breasting cap.


**6 Claims, 3 Drawing Figures**

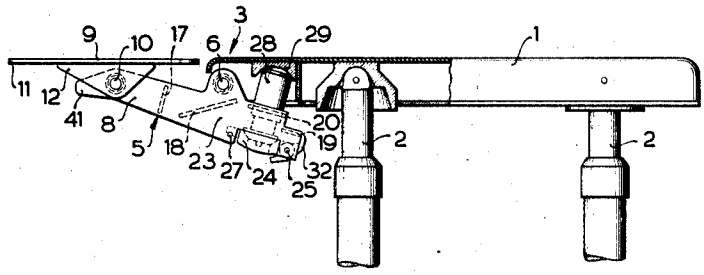

FIG.1

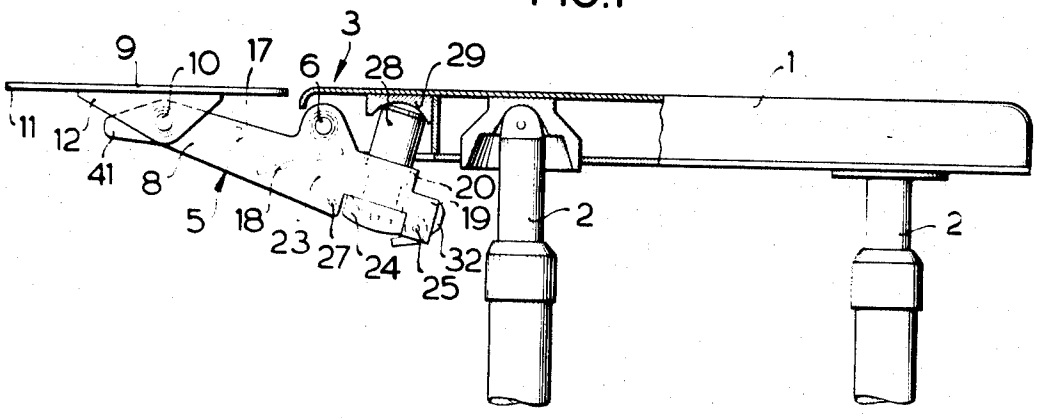


FIG. 2

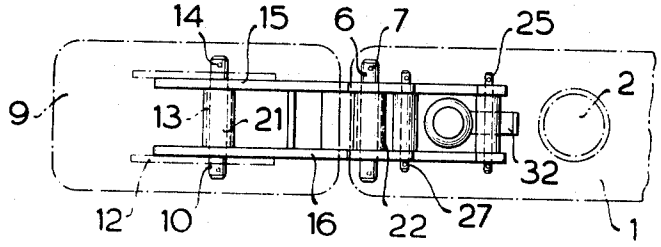


FIG.3

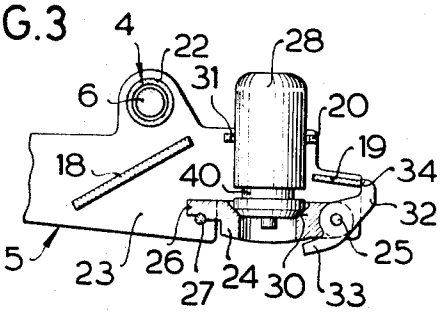


INVENTOR
Günter Bell
by Nicholas W. Proser
attorney

# CAP PULL FOR A MINING FRAME PROP OF AN ADVANCING PIT SUPPORT

## BACKGROUND OF THE INVENTION

The invention relates to a cap pull for the support frame of an advancing pit support, consisting of a frame cap supported by the frame props and a breasting cap which is supported by a two-armed lever pivotally connected to the end of the frame cap and retained by a hydraulic drive piston unit mounted on the frame cap between the front prop and the lever pivot.

Such cap pulls make it possible to support the roof in front of the frame cap and thus in front of the back of the frame. They are more efficient, the larger the supporting force, which can be transmitted to the roof by the breasting cap.

Articulated cap pulls are already known which are equipped with a cap section extending far towards the coal face. The supporting forces at the tip of these caps are comparatively low, but the reaction force acting on the cap hinge is considerable. This creates the risk of overloading. In addition, the adaptability of such a cap pull to irregularities in the roof is unsatisfactory, particularly in the region of the coal face.

Other known cap pulls are, therefore, constructed as continuous caps without hinges. These cap pulls are considerably heavier because the moments which must be taken up by them are larger than in the case of hinged caps. If the lengths of these caps go beyond 4 meters, considerable difficulties arise during the transportation, particularly in the longwall face.

So-called sliding caps are also frequently used as breasting caps at the coal seam end of a cap pull. These caps are frequently adapted to be swiveled towards the roof in the extended position, in order to equalize unevennesses. However, the supporting forces transmitted by these caps are very low because the breasting pivot joint must simultaneously be constructed as a journal guide for the breasting cap.

Finally, it is also known to provide the part of a cap pull extending towards the coal face with spring strips which carry a breasting plate. This construction achieves a resilient support for the breasting plate. However, the supporting forces are also low in this case because in the event of a cave-in of the roof, or of unevennesses of the roof, overloading of the spring strips may easily occur and the spring strips themselves are unsuitable for providing strong support resistance.

The possible supporting forces are substantially greater with the cap pulls, the main features of which are stated in the foregoing and which are already known in the art. In these cap pulls, the breasting cap is supported by a cranked lever so that the drive piston unit extends substantially parallel to the frame cap. With such a cap pull it is possible to match the supporting force on the breasting cap substantially with the supporting force of the frame cap, achieving thereby more favorable conditions on the coal front. On the other hand, only a small movement of the drive piston unit can be accepted so that the resilience of the support of the breasting cap remains unsatisfactory. This resilience is of decisive importance where the drive piston unit, serving for supporting the breasting cap is, as also known in the art, connected to the pressure chamber of the main prop in order to produce uniform supporting forces in the cap pull.



## SUMMARY OF THE INVENTION

It is an object of the invention to provide a solution to the foregoing problems.

According to the invention, said object is achieved by arranging the cylinder of the drive piston unit substantially parallel to the front frame prop and to the supporting force of the breasting cap, and by limiting the maximum supporting force of the breasting cap by a shear pin arrangement in the connection between the drive piston unit supported in the frame cap and the lever.

This makes it possible to achieve the full supporting force of the drive piston unit in spite of the lever pivoting, using its inherent resilience. In addition, there is also the advantage that the length of the drive piston unit has no influence on the distance of the lever pivot from the leading frame prop. This distance may, therefore, be very small. In consequence, the supporting force is uniform over the whole length of the frame cap.

On the other hand, owing to the joint between the drive piston unit and the lever being secured by the shear pin, the frame cap may have a comparatively light construction. For this reason, it need not be calculated in the same manner as a long, continuous cap, which would have to be substantially heavier.

Preferably, the two-armed lever is provided with a bearing plate for the drive piston unit, which bearing plate is pivotable to a limited extent and fixed by the shear pin. The limitation of the pivotal movement of the bearing plate may be achieved by a pivotable limit stop which rests on a stiffening member of the lever.

## BRIEF DESCRIPTION OF THE DRAWINGS

The invention will be further described, by way of example, with reference to the accompanying drawings which illustrate an embodiment of the invention and in which:

FIG. 1 is a side elevation of a cap pull in accordance with the invention, with the frame prop shown broken away,

FIG. 2 is a view from underneath, and

FIG. 3 is a detail view corresponding to FIG. 1 showing the mounting of a drive piston unit on a lever supporting the breasting cap.

## DESCRIPTION OF PREFERRED EMBODIMENT

A frame cap **1** is constructed as a continuous main cap and is supported in this embodiment by two props **2**. It is comparatively short because the overhang **3** is only small. Consequently, the frame cap is comparatively light.

A two-armed lever **5** is pivotably mounted on the frame cap for movement about a pivot axis **4**. The pin **6** of the pivot joint is secured on both sides by split pins, passing through bores **7**. On the forward arm **8** of the lever **5**, a plate breasting cap **9** is pivotably mounted by means of a pivot pin **10**. This plate cap is made of a steel plate **11** and is provided with ribs **12** on its lower surface. A pin **10** passes through the ribs **12**, and the central portion **13** of this pin is mounted in a tube **21**. The pin is secured with split pins **14**.

In this embodiment, the two-armed lever is a welded fabrication. Two side plates **15** and **16** are held together in spaced-apart relationship by stiffening elements **17** to **20**. In addition to the tube **21**, a further

tube 22 is provided which interconnects the two stiffening elements 17 and 20. This tube receives the pivot 6 of a joint by which the lever is connected to the front end of the frame cap 1.

A plate 24 is fitted at the end 23 of the other arm of the lever 5. It is held by a pin 25 between the side plates 15 and 16 and has at its other end a projecting lug 26 which rests on a pin 27 which is also mounted in the side plates 15 and 16.

Between the frame cap 1 and the plate 24, there is a hydraulic drive piston unit 28. The cylinder of the drive piston unit rests in a part-spherical mounting at 29 in the frame cap. The piston rod end is mounted spherically at 30 on the plate 24. In addition, the cylinder of the drive piston unit is also surrounded with clearance by a stiffening element 20 with a circular bore 31. A lever 32 is rotatably mounted on pins 25 and forms a pivotable limit stop. The lever 32 has an extension 33 which is located at a small distance under the plate 24. The other side of the lever 32 rests at 34 on the stiffening element 19 of the two-armed lever 5.

When the drive piston unit 28 is supplied with hydraulic fluid, the drive piston and with it the piston rod 40 extend from the cylinder. The two-armed lever 5 swivels about the axis 4 and the plate cap is raised until the roof is reached. Since the plate cap is adapted to pivot about the pin 10, it rests on the uneven parts of the roof.

The stroke of the drive piston unit is so large that in its highest position the plate cap is substantially above and in its lowest position below the surface of the main cap 1 in order to enable it to overcome steps and shoulders, whether they are positive or negative. This is achieved in such a way that the cylinder of the drive piston unit 28 is arranged substantially parallel to the forward frame prop 2 and to the supporting force of the breasting cap, acting in the pivot joint 10.

The drive piston unit 28 may be connected to the hydraulic circuit of the frame prop. In this case, the inner pressure in the drive piston unit corresponds to the overpressure of the prop and cannot exceed a certain amount. However, when the resilience of the drive piston unit is exhausted, a shear pin in the joint of the drive piston unit on the two-armed lever ensures that the maximum supporting force of the breasting cap is limited.

The pin 27 is a shear pin. It fractures at the moment when the predetermined maximum supporting force is exceeded. In this event, the plate 24 swivels about the pin 25, thereby relieving the plate cap. The plate 24 cannot pivot indefinitely after the fracture of the shear pin 27, which would enable the cylinder to drop. Its rotational movement is limited by the lever 32. The plate rests on the part 33 of the lever 32 which rests in turn at 34 on the stiffening element 19 and thereby limits the pivoting movement of the plate 24 about the pin 25.

As a modification of the embodiment shown, the plate cap 9 may be spherically mounted on the two-armed lever 5. The movement of the ball joint is limited in all directions. The drawing shows a front lug 41 of the two-armed lever 5 on which the top-heavy plate cap 9 rests when it is far removed from the roof. This has the advantage that during the movement of the frame or support, the plate cap 9 cannot foul steps or projections in the roof and slides along the roof without obstruction. In addition, rocks, dislodged from the roof and accidentally dropping on the plate cap 9 cannot lead to breakdowns, because they are deflected towards the front into the long wall, possibly into conveying means there located and cannot be pushed on to the main cap 1.

By suitably choosing the position of the thrust piston drive 28 relative to the pivot axis 4 of the lever 5 and the force application in the thrust piston drive, the specific supporting force on the plate cap is adapted to the force with which the front end of the frame cap 1 supports the roof.

What I claim is:

1. A cap pull for a frame prop of an advancing pit support, comprising a frame cap, forward and rearward frame props supporting the frame cap, a breasting cap having the vector of its supporting force at right angles thereto, a two-armed lever supporting the breasting cap, a pivot joint between said lever and the end of the frame cap, a hydraulic drive piston unit fixed to the frame cap between the forward frame prop and said lever pivot joint, a cylinder of the drive piston unit being arranged generally parallel to the forward frame prop and to the vector of the supporting force of the breasting cap, and a shear pin means associated with the drive piston unit and the lever, whereby a force in excess of a predetermined maximum of said breasting plate effects shearing of said pin means.

2. A cap pull according to claim 1, wherein a bearing plate of the lever is engaged by the drive piston unit, which bearing plate is mounted for limited pivotal movement and fixed by means of said shear pin arrangement.

3. A cap pull according to claim 2, wherein a pivotable limit stop is provided and the lever has a stiffening member on which the limit stop rests, pivotal movement of the bearing plate being limited by engagement with the limit stop.

4. A cap pull according to claim 1, wherein the breasting cap is top-heavy and the lever comprises an abutment for supporting the breasting cap when pivoted under the influence of its top-heaviness.

5. A cap pull according to claim 1, wherein the lever is formed by two continuous side plates interconnected by stiffening members at least one of which is formed by a tube serving as a mounting for a pivot pin providing the lever joint.

6. A cap pull according to claim 1, wherein the breasting cap has a spherical mounting on the lever.

* * * * *