Dec. 22, 1964 P. F. POIZAT 3,161,899

REVERSIBLE ROTARY TOOTHBRUSH

Filed July 9, 1962

FIG.1

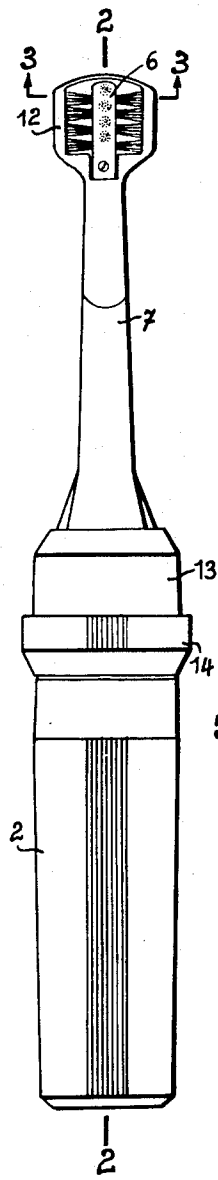

FIG.2

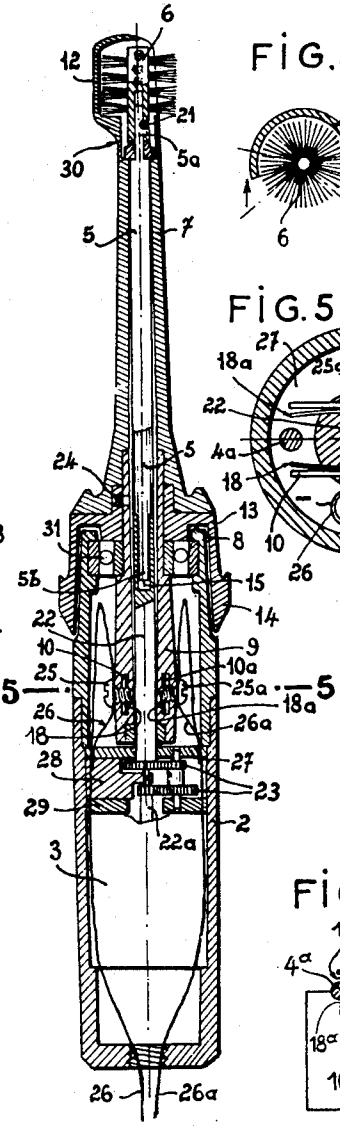

FIG.3

FIG.4

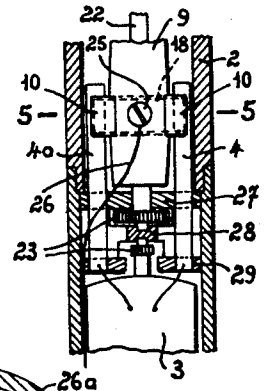

FIG.5

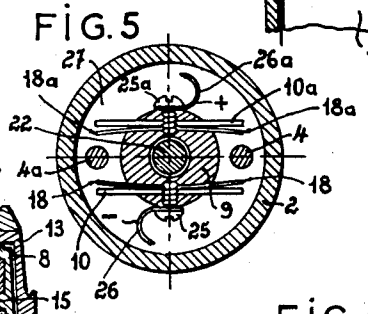

FIG.6

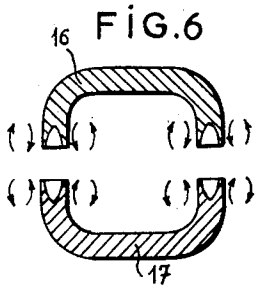

FIG.7

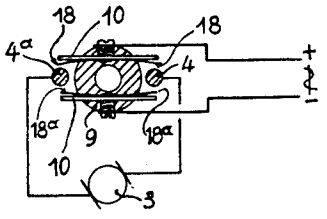

INVENTOR.
PIERRE FLEURY POIZAT
BY Irvin S. Thompson
ATTORNEY

United States Patent Office 3,161,899 Patented Dec. 22, 1964

3,161,899

REVERSIBLE ROTARY TOOTHBRUSH

Pierre Fleury Poizat, 27 Rue du Nord, Cours, France

Filed July 9, 1962, Ser. No. 208,475
Claims priority, application France, July 20, 1961, 41,753, Patent 1,296,174
2 Claims. (Cl. 15—23)

It is a well-known fact that one's teeth should be cleaned by imparting to the toothbrush a movement leading from the gums towards the teeth, but such a movement is not easily executed manually.

My invention has for its object a rotary toothbrush adapted to reverse the direction of the brush in a manner such that the teeth may always be brushed in the proper direction, that is from the gums towards the teeth; to this end, the brush includes an electric motor enclosed inside a casing while its shaft extending outwardly of said casing and carries at its outer end a support for the brush bristles. Said support is enclosed and laterally protected by a small laterally open casing fitted at the end of a hollow handle surrounding the outer end of the motor shaft and adapted to rock around the axis of the latter to either side of an inoperative position into an angular operative position providing for the energization of the reversible motor in a coresponding direction.

The mere contact between one of the edges of the lateral opening in the casing protecting the brush bristles with the gum produces automatically a change in the angular setting of the handle in a corresponding direction, in a manner such that at its opposite end, which extends inside the motor casing, said handle may control a reversing switch defining the direction of rotation of the bristle support.

The accompanying diagrammatic drawings illustrate by way of example, a preferred embodiment of my invention. In said drawings:

FIGS. 1 and 2 show said brush respectively in side view illustrating the lateral opening of the casing protecting the brush bristles and in axial longitudinal cross section through line 2—2 of FIG. 1.

FIG. 3 is a cross-section through line 3—3 of FIG. 1.

FIG. 4 is a longitudinal cross-section on an enlarged scale, showing the relative position of the stationary and movable contact-pieces for the inoperative condition of the tooth brush.

FIG. 5 is a transverse cross-section through line 5—5 of FIG. 4.

FIG. 6 is a diagram of a human mouth seen from the front, showing the direction of rotation to be assumed by the motor according as to whether the brush is to brush the teeth on the lower jaw or on the upper jaw and as to whether it is to brush their inner or outer surface.

FIG. 7 is a wiring diagram including the switches controlled by the rotation of the handle carrying the movable contact-pieces.

As illustrated, there is provided inside a casing 2 serving as a grip for holding the brush, an electric motor 3 connected with the stationary terminals 4 and 4*a* of a reversing switch.

To the end of an extension of the motor shaft 5, projecting beyond the casing 2, is removably secured the bristle support 6 which may assume a round, frusto-conical, barrel, disc or the like desired shape. This is provided by fitting over the outer end 5*a* of the shaft 5, which end has a smaller diameter, said socket-shaped bristle support 6 capping said end 5*a* and secured thereto by any means such as a set screw 21. Said shaft 5 extends freely through the tubular handle 7 which is rigid with the sleeve 13 and the member 9 carrying the movable contact-pieces 10 to form a unit which revolves freely

inside the opening 8 formed in the motor casing 2 round the shaft 5.

For the inoperative position of the member 9 of the rotary unit, the movable contact pieces 10 and 10*a* on said member are located as illustrated in FIG. 5 at a distance from the stationary contact pieces 4 and 4*a*. Antagonistic springs 18 and 18*a*, engaging said movable contact pieces, are secured to the member 9 by screws 25 and 25*a* also securing said contact pieces 10 and 10*a*. The system constituted by the tubular handle 7, the sleeve 13 and the movable contact-carrying member 9 is held in its inoperative medial postion by the yielding wires 26 and 26*a* feeding current to the contact pieces through the same screws 25 and 25*a*. The movable contact pieces 10 and 10*a* are positioned when inoperative to either side of the stationary contact-pieces 4 and 4*a* of the reversing switch. At its end opposed to that entering the motor casing, the handle 7 carries at its outer narrow end a small protecting casing 12 which encloses laterally the bristle support 6 except for a broad opening through which the bristles project. When it is desired to brush for instance the outer surface of the upper teeth, the edge of said protecting casing makes said handle pivot as soon as it engages the gum through the edge of its lateral opening and at such a moment the shifting of the carrier 9 for the movable contact-pieces 10 closes the circuit over the motor to make it rotate in the desired direction.

If the brush is now shifted so as to clean the outer surface of the lower jaw teeth on the same side of the mouth or the inner surface of the upper jaw teeth on the same side, the opposite edge of the protecting casing 12 of the support 6 engages the gums. At such a moment, the handle pivots in a direction opposite to its preceding angular movement and the carrier 9 for the movable contact-pieces 10 reverses the direction of the electric current passing through the stationary contact-pieces, whereby the motor is started rotating in the opposite direction. The bristle support revolves then in the same direction for cleaning the right-hand surfaces of the teeth on the upper jaw and the left-hand surfaces on the lower jaw 17 (FIG. 6) and in a reverse direction for the left-hand surfaces of the teeth on the upper jaw 16 and for the right hand surfaces of the teeth on the lower jaw 17.

In order to prevent any damage to the motor 3 through introduction of water inside the casing, the handle 7 is made rigid with the sleeve 13 overlapping to a large extent the opening 8 in the casing. Fluidtightness is also provided between the shaft 5 and the handle 7.

It is also possible to control the reversal and the stoppage of the motor through action of one's finger on the annular projection 14 formed on the sleeve 13.

The arrangement constituted by the handle 7, the casing 12, the bristle support 6, the outer section of the shaft down to the coupling means 15 is interchangeable and allows using with the same grip and motor a number of such different individual brush arrangements, each of which is allotted to a predetermined member of a family and is fitted removably over the casing, the shaft sections being then interconnected at 15. These coupling means 15 are constituted by the lower end 5*b* of the shaft 5 engaging the upper socket-shaped end of the shaft 22 driven by the speed reducer 23 and revolving freely inside the member 9 rigidly secured to the handle 7 and sleeve 13 by the screw 24. A ball bearing 31 is fitted between the motor casing 2 and the outer wall of the member 9 so as to allow the free rotation of the latter.

The motor 3 drives through its shaft 22*a* the speed reducer 23 housed between two transverse partitions 27 and 29 rigid with the motor casing 2 and stayed by the block 28.

Obviously, my invention is not limited to the sole embodiment described and it includes all the modifica-

tions thereof falling within the scope of the accompanying claims and, in particular, I may resort to mechanical driving means, or else, to a mechanical reversing system. I may also fit on the motor-carrying casing described any other toilet implement such as a nail brush, a nail grinding wheel, a razor or the like. For such implements, the direction of rotation has no importance and the protecting casing is unnecessary. The starting is therefore operated through manual operation of the annular projection 14 associated, if required, with means for locking the arrangement in its operative position.

What I claim is:

1. A toilet implement comprising driving means, a main casing enclosing the latter, a shaft controlled by the driving means and extending outwardly of the main casing, an operative part carried by the outer end of said shaft, a rotary unit revolvably carried around the shaft and extending between a point inside said main casing and a point immediately to the rear of the operative part, a protecting casing rigid with said unit and extending around said operative part to protect the latter along a fraction of its outer surface and provided with a lateral opening facing said operative part, the edges of said opening in said protecting casing being adapted to engage the operator's skin one at a time at the same time as the operative part, a sleeve rigid with the unit and fitted revolvably over the end of the main casing facing the operative part, a manually operable annular projection rigid with said sleeve and revolvably fitted around the main casing, and means carried by said unit inside the main casing and adapted to control the direction of rotation of the driving means according to the direction of shifting of the protecting casing upon engagement of one of the edges of its openings against the operator's skin.

2. A toothbrush compising driving means, a main casing enclosing the latter, a shaft controlled by the driving means and extending outwardly of the main casing, a bristle system carried by the outer end of said shaft, a rotary unit revolvably carried around the shaft and extending between a point inside said main casing and a point to the rear of the bristle system, a protecting casing rigid with the outer end of said unit and surrounding said bristle system to protect the latter along a fraction of its outer surfaces and provided with a lateral opening facing said bristle system, the edges of said opening being adapted to engage the operator's skin one at a time at the same time as the bristle system, means carried by said unit inside the main casing and adapted to control the direction of rotation of the driving means according to the direction of shifting of the protecting casing upon engagement of one of the edges of its openings against the operator's gum, and a manually operable sleeve rigid with the unit and revolvably fitted outside that end of the main casing which is adjacent the bristle system.

References Cited by the Examiner

UNITED STATES PATENTS

2,275,247	3/42	Cauanagh	15—23
2,279,982	4/42	Glynn	15—23

FOREIGN PATENTS

55,719	1/12	Switzerland.
552,436	12/56	Italy.

CHARLES A. WILLMUTH, *Primary Examiner.*