Nov. 9, 1965 J. R. M. ALGER ET AL 3,216,226

CLOTHES WASHING MACHINES AND APPARATUS

Filed Sept. 9, 1963 5 Sheets-Sheet 1

FIG. 1

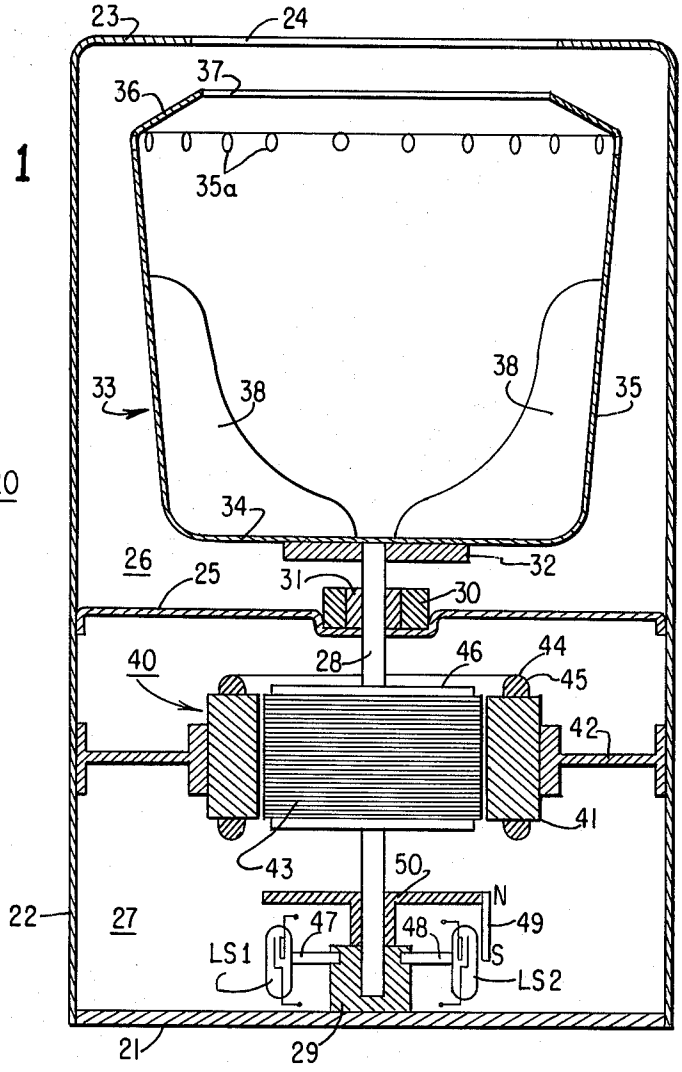

INVENTORS
John R. M Alger
Carl V. Hays.

BY
Brangley, Baird Clayton, Miller & Vogel, Attys.

Nov. 9, 1965 J. R. M. ALGER ET AL 3,216,226

CLOTHES WASHING MACHINES AND APPARATUS

Filed Sept. 9, 1963 5 Sheets-Sheet 2

FIG. 2

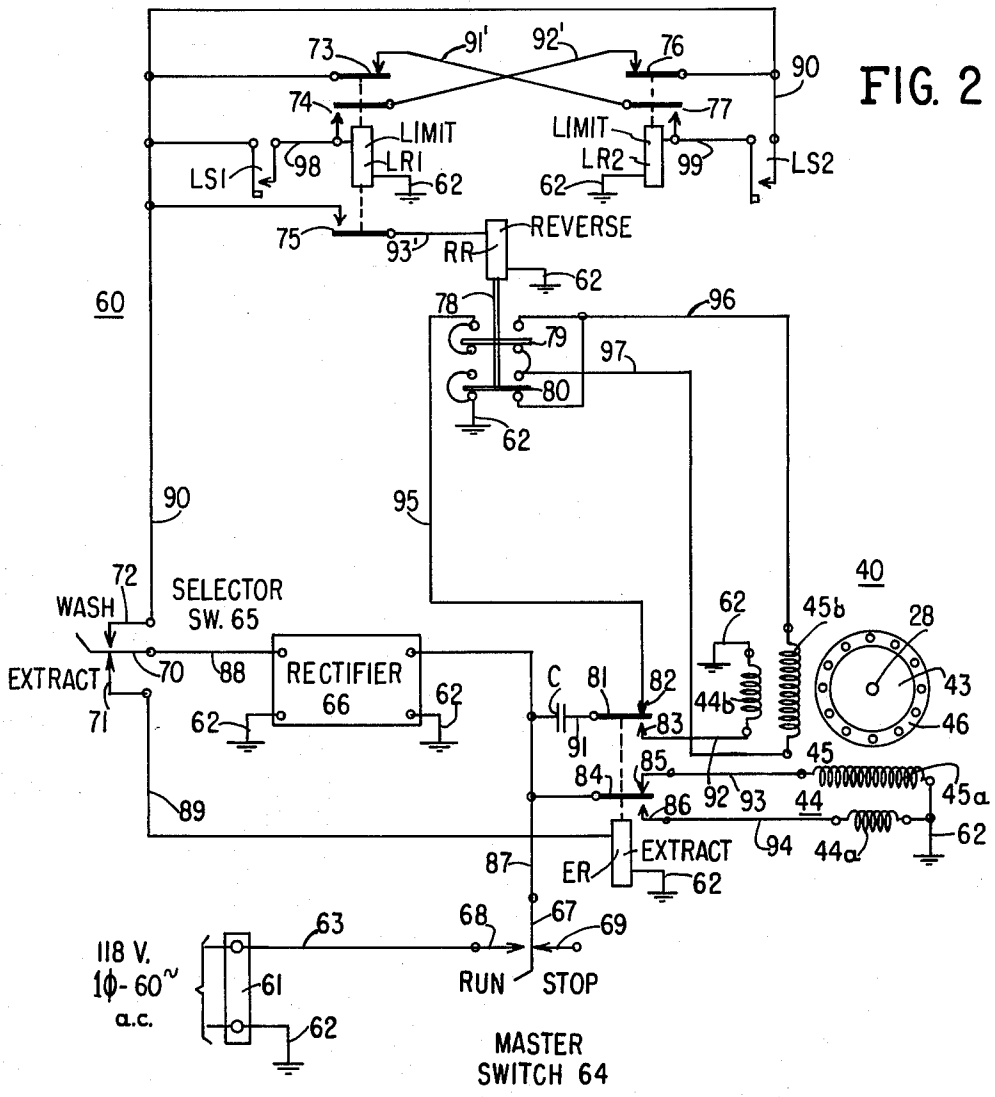

INVENTORS
John R. M. Alger
Carl V. Hays.

BY
Brangley, Baird, Clayton, Miller & Vogel Attys.

Nov. 9, 1965 J. R. M. ALGER ET AL 3,216,226

CLOTHES WASHING MACHINES AND APPARATUS

Filed Sept. 9, 1963 5 Sheets-Sheet 3

FIG. 3

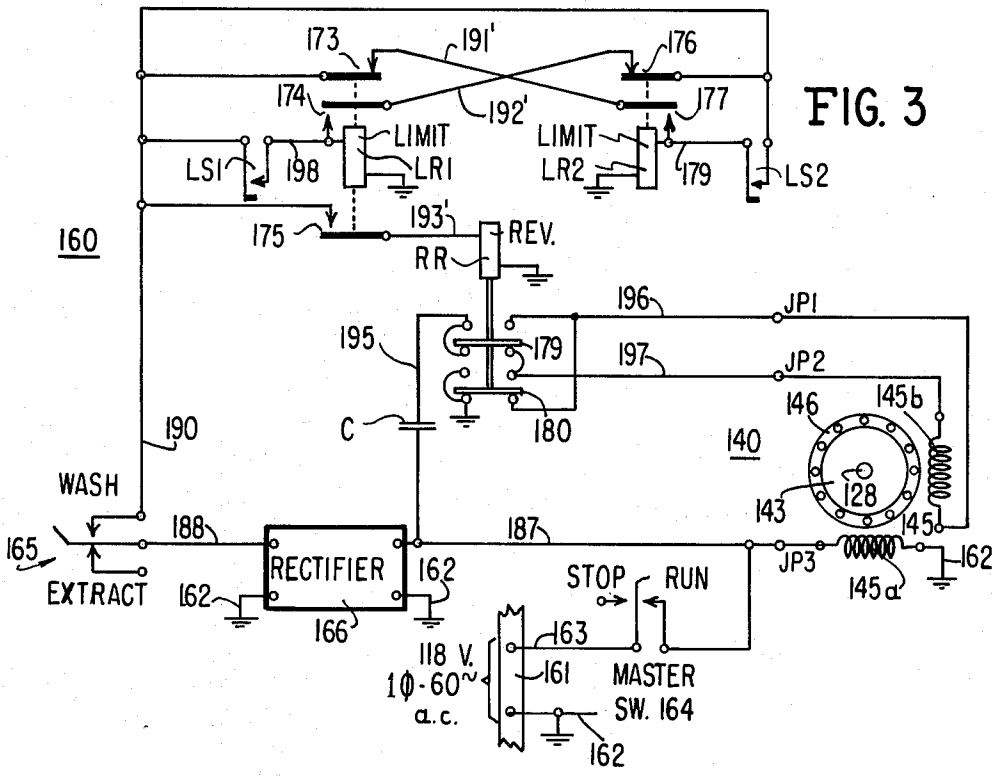

FIG. 4

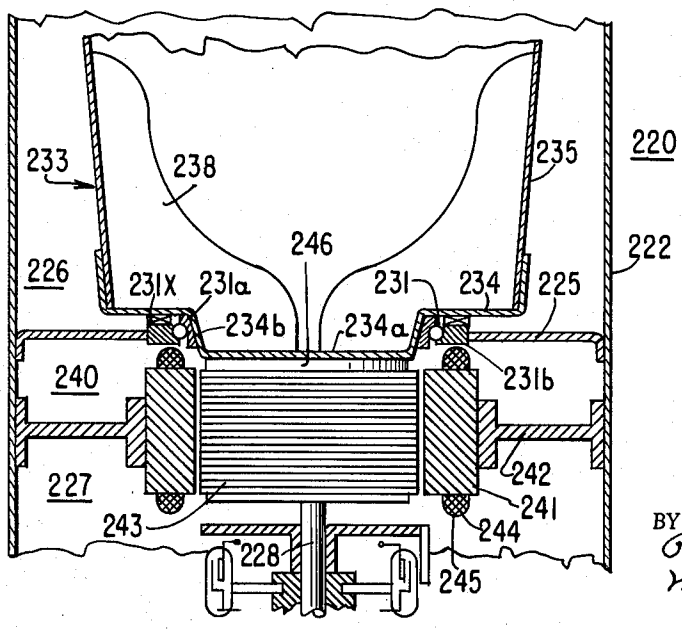

INVENTORS
John R. M. Alger
Carl V. Hays.

BY Brangley, Baird, Clayton, Miller & Vogel
Attys.

Nov. 9, 1965 J. R. M. ALGER ET AL 3,216,226

CLOTHES WASHING MACHINES AND APPARATUS

Filed Sept. 9, 1963 5 Sheets-Sheet 4

FIG. 5

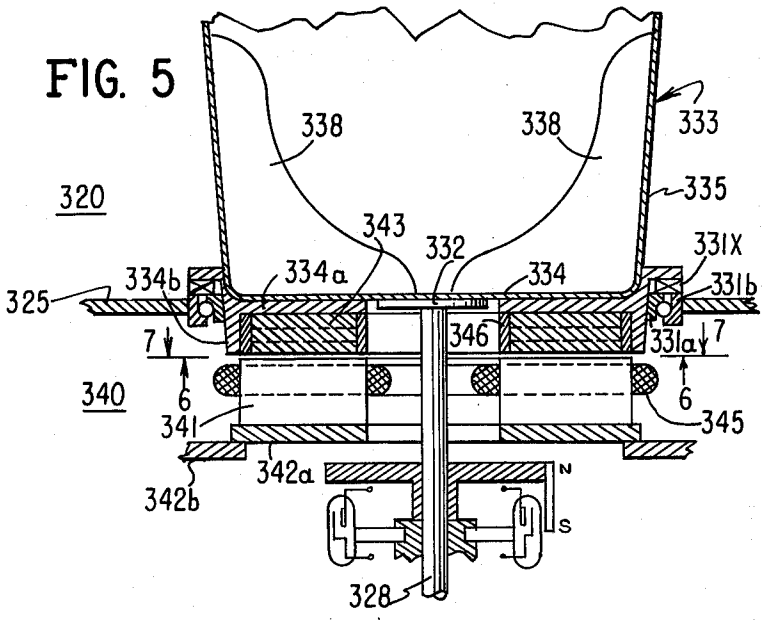

FIG. 6

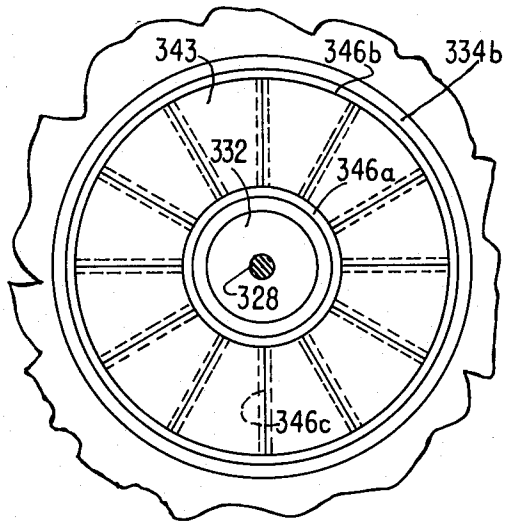

FIG. 7

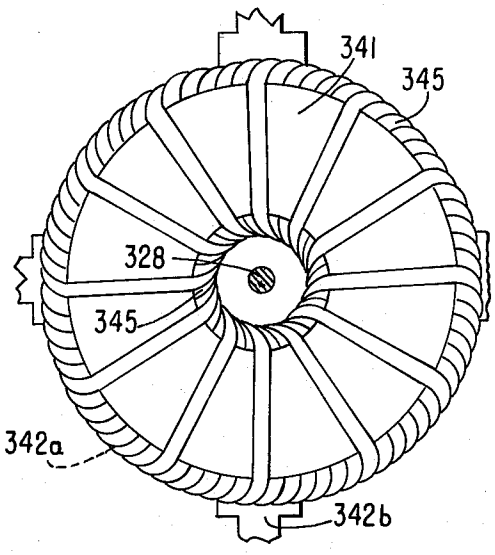

INVENTORS
John R. M. Alger
Carl V. Hays.

BY
Prangley, Baird, Clayton, Miller & Vogel
Attys.

Nov. 9, 1965 J. R. M. ALGER ET AL 3,216,226

CLOTHES WASHING MACHINES AND APPARATUS

Filed Sept. 9, 1963 5 Sheets-Sheet 5

FIG. 8

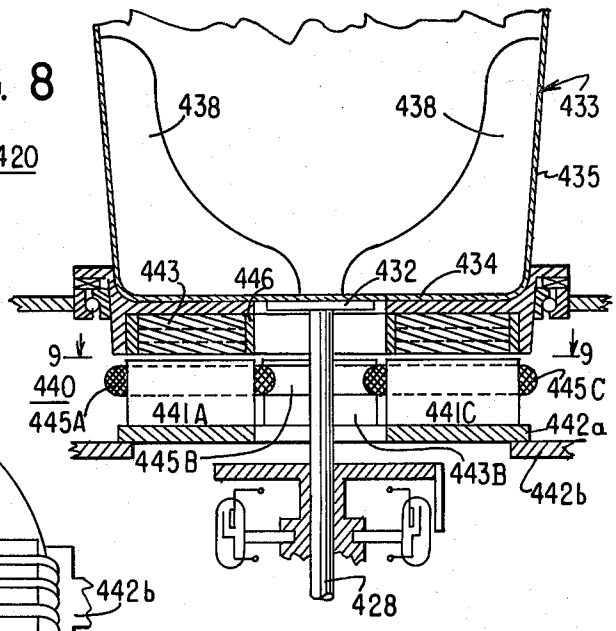

FIG. 9

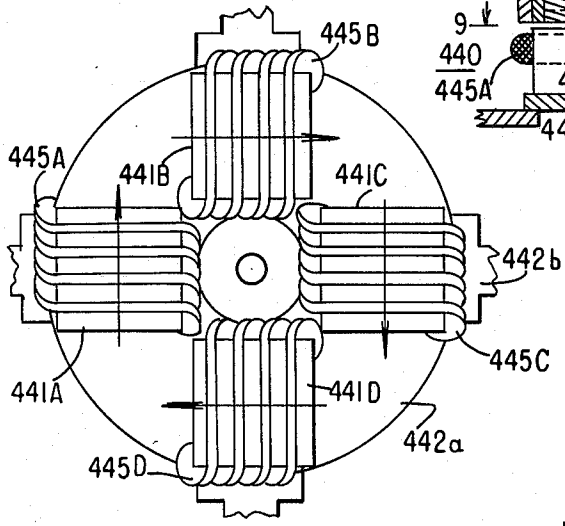

FIG. 10

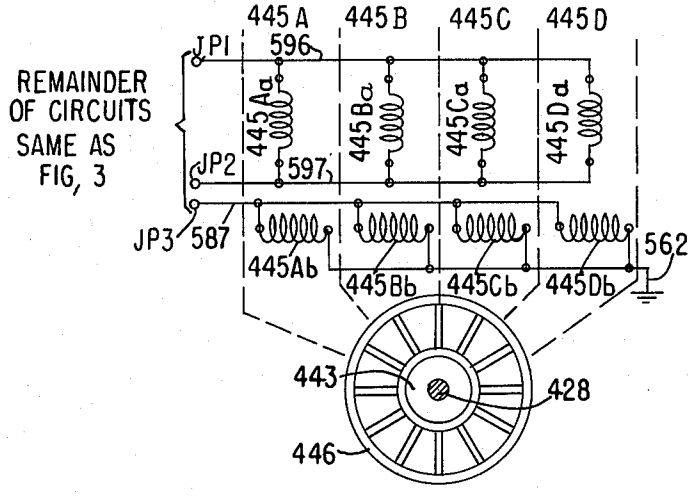

INVENTORS
John R. M. Alger
Carl V. Hays

BY
Prangley, Baird, Clayton, Miller & Vogel
Attys.

United States Patent Office 3,216,226 Patented Nov. 9, 1965

3,216,226 CLOTHES WASHING MACHINES AND APPARATUS

John R. M. Alger, Oak Park, Ill., and Carl V. Hays, Milwaukee, Wis., assignors to General Electric Company, a corporation of New York

Filed Sept. 9, 1963, Ser. No. 307,484
12 Claims. (Cl. 68—23)

The present invention relates to clothes washing machines, and more particularly to such machines of small size or capacity that are especially designed for use in a bath room, or the like.

It is a general object of the invention to provide a clothes washing machine of the type noted that comprises a simple drive mechanism that is devoid of mechanical gearing or other complicated transmission devices.

Another object of the invention is to provide a clothes washing machine that is capable of selective clothes-washing and water-extracting operations, wherein the entire drive mechanism therefor consists fundamentally of a reversible electric motor and a control circuit for the motor, and wherein the desired operations of the machine may be obtained by selectively governing the control circuit for the motor.

A further object of the invention is to provide a clothes washing machine of the character described, wherein the machine includes a support and an upstanding clothes-receiving tub mounted for rotation upon the support, the tub being characterized by oscillation about its upstanding axis to effect washing of the contained clothes and by rotation continuously about its upstanding axis to effect centrifugal water extracting from the contained clothes, an electric motor including a stator mounted upon the support and a rotor mounted upon the tub, whereby movement of the rotor relative to the stator causes direct and corresponding movement of the tub, operatively related stator and rotor windings respectively carried by the stator and by the rotor, a source of electric power, first circuit control facility for energizing the stator winding alternately with first and second polarities from the source, whereby the tub is oscillated to carry out a clothes-washing operation upon the contained clothes, and second circuit control facility for energizing the stator winding continuously with a given polarity from the source, whereby the tub is rotated continuously to carry out a water-extracting operation upon the clothes contained in the tub.

A further object of the invention is to provide a clothes washing machine of the character described, wherein the rotor of the electric motor is mounted directly upon the tub in good heat-exchange relation therewith so that the heat developed in the rotor winding is conducted by the rotor into the tub, thereby to effect heating of the wash water and the clothes contained in the tub during the clothes-washing operation.

A further object of the invention is to provide a clothes washing machine of the character described, wherein the first and second circuit control facilities are selectively governed by the conjoint operations of a master switch and a selector switch, each of the manually operable type.

A still further object of the invention is to provide a clothes washing machine of the type described, wherein the control circuit facility for energizing the stator winding alternately with first and second polarities from the source essentially comprises a reversing switch, cycle mechanism for selectively actuating the reversing switch, and limit mechanism for selectively governing the cycle mechanism.

Yet another object of the invention is to provide a clothes washing machine of the character described, wherein the electric motor is of the induction type so that the stator carries a main winding and the rotor carries an induction winding, and wherein the rotor is directly carried by the bottom of the tub in good heat-exchange relation therewith and the stator is positioned below the rotor and carried by the support so as to produce a magnetic field gap there-between that is located in a substantially horizontal plane arranged substantially normal to the upstanding axis of the tub, and wherein the electric power source is of A.-C., whereby the heat developed by the induction currents in the induction winding carried by the rotor is dissipated by conduction by the rotor into the tub.

Further features of the invention pertain to the particular arrangement of the elements of the clothes washing machine and of the control circuit therefor, whereby the above-outlined and additional operating features thereof are attained.

The invention, both as to its organization and method of operation, together with further objects and advantages thereof, will best be understood by reference to the following specification, taken in connection with the accompanying drawings, in which:

FIG. 1 is a vertical sectional view of a clothes washing machine embodying the present invention;

FIG. 2 is a diagrammatic illustration of the electric circuit network for controlling the clothes washing machine of FIG. 1;

FIG. 3 is a diagrammatic illustration of a modified form of the electric circuit network for controlling the clothes washing machine of FIG. 1;

FIG. 4 is a fragmentary vertical sectional view of a modified form of the clothes washing machine;

FIG. 5 is a fragmentary vertical sectional view of another modified form of the clothes washing machine;

FIG. 6 is a fragmentary horizontal sectional view of the clothes washing machine, this view being taken in the direction of the arrows along the line 6—6 in FIG. 5;

FIG. 7 is a fragmentary horizontal sectional view of the clothes washing machine, this view being taken in the direction of the arrows along the line 7—7 in FIG. 5;

FIG. 8 is a fragmentary vertical sectional view of a further modified form of the clothes washing machine;

FIG. 9 is a fragmentary horizontal sectional view of the clothes washing machine, this view being taken in the direction of the arrows along the line 9—9 in FIG. 8; and

FIG. 10 is a fragmentary diagrammatic illustration of the electric circuit network for controlling the clothes washing machine of FIGS. 8 and 9.

Referring now to FIG. 1 of the drawings, the clothes washing machine 20 there illustrated, and embodying the features of the present invention, comprises a substantially horizontal supportnig base 21 carrying an upstanding substantially cylindrical casing 22 including a top wall 23 having a substantially centrally disposed circular top opening 24 therein. Arranged within the casing 22 is a substantially circular diaphragm or dividing wall 25 defining therein an upper drain tub 26 and a lower machinery compartment 27. An upstanding substantially centrally disposed shaft 28 is arranged principally in the machinery compartment 27 and supported at the lower end thereof by a bearing member 29 carried by the base 21, whereby the shaft 28 is mounted for rotation about its upstanding longitudinally extending axis. The upper end of the shaft 28 projects through a substantially centrally disposed opening provided in the diaphragm 25 and into the bottom of the drain tub 26; and an annular collar 30 is rigidly carried by the diaphragm 25 and sealed in liquid-tight relation therewith and dis-

posed in surrounding relation with the shaft **28**; which annular collar **30** carries interiorly thereof a bearing member **31** surrounding and supporting the shaft **28**. The bearing member **31** is also sealed in liquid-tight relation with both the annular collar **30** and the shaft **28** in order to prevent the escape of wash water from the drain tub **26** along the shaft **28** into the machinery compartment **27**. The upper end of the shaft **28** carries a disk **32** rigidly secured thereto that supports a wash tub **33** rigidly secured thereto.

The wash tub **33** is of upstanding cup-shaped configuration and is disposed substantially centrally within the drain tub **26**; which wash tub **33** comprises a substantially horizontal bottom wall **34** to which the disk **32** is rigidly secured, and upwardly flared tubular side wall **35**, and an upwardly and inwardly directed substantially annular guard rim **36** having a substantially centrally disposed circular top opening **37** therein; which top opening **37** into the wash tub **33** is disposed in substantial registry with the top opening **24** disposed in the top wall **23**. The wash tub **33** is of a conventional construction and carries in the lower portion thereof a plurality of angularly spaced-apart upstanding vanes **38**, each of the vanes **38** being of generally triangular configuration and positioned in an upstanding radially extending plane. Specifically, each of the vanes **38** includes a bas rigidly secured to the bottom wall **34**, an upstanding leg rigidly secured to the side wall **35**, and a hypotenuse that faces the upstanding center line of the wash tub **33**, the so-called "hypotenuse" of each of the vanes **38** being in the general form of a wave with rounded upper and lower ends and with a midsection that is bowed outwardly toward the side wall **35**, as clearly illustrated. The number of the vanes **38** provided within the wash tub **33** is not critical, but ordinaily three such vanes **38** are arranged in the lower portion of the wash tub **33**. Also the usual out-flow holes **35***a* are provided in the top of the side wall **35** of the wash tub **33** and disposed in an annular array at the junction of the extreme top of the side wall **35** and the guard rim **36**.

Further, the machine **10** comprises an electric drive motor **40** that is preferably of the induction type; the motor **40** being arranged in the machinery compartment **27** and comprising a stator **41** mounted upon a spider-like support **42** rigidly secured to the lower portion of the side wall **22** and positioned intermediate the base **21** and the diaphragm **25**, and a rotor **43** rigidly mounted on the intermediate portion of the shaft **28** and rotatable therewith. The stator **41** is of substantially annular form and constitutes a first magnetic field member, and the rotor **43** is of substantially cylindrical form and constitutes a second magnetic field member. The stator **41** closely surrounds the rotor **43** providing a substantially cylindrical magnetic field gap therebetween.

Referring now to FIG. 2, the induction motor **40** is of the split-phase, two-winding type, comprising two main windings **44** and **45** (FIG. 2) carried by the stator **41** and an induction winding **46** of the squirrel-cage type carried by the rotor **43**. The main winding **44** comprises a small number of poles, such, for example, as 12-poles, and includes two sections **44***a* and **44***b* arranged in quadrature relation. In other words, the two sections **44***a* and **44***b* of the main winding **44** are arranged in substantial electrical dephased relation with respect to each other and are commonly inductively coupled to the squirrel-cage winding **46**. The main winding **45** comprises a large number of poles, such, for example, as 60-poles, and includes two sections **45***a* and **45***b* arranged in quadrature relation. In other words, the two sections **45***a* and **45***b* of the main winding **45** are arranged in substantial electrically dephased relation with respect to each other and are commonly inductively coupled to the squirrel-cage winding **46**.

Further, the machine **10** comprises two limit switches

LS1 and LS2 respectively carried by two substantially diametrically positioned arms **47** and **48** carried by the bearing member **29**; which limit switches LS1 and LS2 comprise a portion of limit mechanism, also including a permanent magnet **49** rigidly secured to a disk **50** rigidly carried by the lower portion of the shaft **28** and rotatable therewith. The permanent magnet **49** depends from the disk **50** and alternatively cooperates with the limit switches LS1 and LS2, as the shaft **28** is oscillated through an angle of approximately 180°, as explained more fully hereinafter. More particularly, as the shaft **28** is thus oscillated, the permanent magnet **49** is moved into close proximity first with one of the limit switches and then with the other of the limit switches. Each of the limit switches LS1 and LS2 essentially comprises a glass envelope into which a pair of switch springs are sealed, the switch springs being normally biased into disengagement with each other. One of the switch springs carries a magnetic armature which is attracted toward the depending pole of the permanent magnet **49**, when the same is rotated into close proximity thereto; whereby the armature is moved toward the pole of the approaching permanent magnet **49** to flex the supporting spring so as to move the pair of contacts into engagement with each other for an electrical control purpose explained subsequently. When the permanent magnet **49** moves away from the limit switch LS1 or LS2, the armature thereof is released so that the supporting spring is returned into its normal position, due to the resiliency of the supporting spring, so as to disengage the pair of switch spring contacts.

Referring now to FIG. 2, the washing machine **10** comprises the electric control circuit **60** there illustrated, which further comprises a terminal board **61** to which there is connected an electric power source of 118 volts, single phase, 60 cycles, A.-C., and including a grounded conductor **62** and an ungrounded conductor **63**. The control circuit **60** also comprises a manually operable master switch **64** having a "stop" position and a "run" position, a manually operable selector switch **65** having a "wash" position and an "extract" position, a rectifier **66** of any suitable type, a pair of limit relays LR1 and LR2, a reverse relay RR, an extract relay ER, and a capacitor C that is preferably of the so-called "oil-filled" type. Further, the control circuit **60** comprises the two limit switches LS1 and LS2, and the electric drive motor **40**, as previously described.

The master switch **64** includes a movable switch spring **67** and a pair of stationary switch springs **68** and **69**; and the selector switch **65** includes a movable switch spring **70** and two stationary switch springs **71** and **72**. The limit relay LR1 includes a winding and an armature controlling the contact sets **73**, **74** and **75**; the limit relay LR2 includes a winding and an armature controlling the contact sets **76** and **77**; and the reverse relay RR includes a winding and an armature controlling an insulating contact rod **78**. The rod **78** controls two contact bridging members **79** and **80** each governing front and back pairs of contacts. The extract relay ER includes a winding and an armature controlling two movable switch springs **81** and **84**; the movable switch spring **81** controls a pair of stationary switch springs **82** and **83**; and the movable switch spring **84** controls a pair of stationary switch springs **85** and **86**.

In the control circuit **60**, the conductor **63** is connected to the switch spring **68** of the master switch **64**, and the switch spring **67** of the master switch **64** is connected to a conductor **87**. The rectifier **66** comprises a pair of input terminals respectively terminating the conductors **62** and **87**, and a pair of output terminals respectively terminating the conductor **62** and a conductor **88**. The switch spring **70** of the selector switch **65** terminates the conductor **88**, and the switch springs **71** and **72** of the selector switch **65** respectively terminate two conductors **89** and **90**. The terminals of the limit switch LS1 respectively terminate the conductor **90** and

a conductor 98; the terminals of the limit switch LS2 respectively terminate the conductor 90 and a conductor 99; the winding of the limit relay LR1 is bridged across the conductors 62 and 98; and the winding of the limit relay LR2 is bridged across the conductors 62 and 99. The contacts of the set 75 respectively terminate the conductor 90 and a conductor 93'; and the winding of the reverse relay RR is bridged across the conductors 62 and 93'. The contacts of the set 74 respectively terminate the conductor 98 and a conductor 92'; the contacts of the set 73 respectively terminate the conductor 90 and a conductor 91'; the contacts of the set 77 respectively terminate the conductors 99 and 91'; and the contacts of the set 76 respectively terminate the conductors 90 and 92'. The back contacts controlled by the bridging member 79 respectively terminate a pair of conductors 95 and 97; and the front contacts controlled by the bridging member 79 respectively terminate the conductor 95 and a conductor 96. The back contacts controlled by the bridging member 80 respectively terminate the conductors 62 and 96; and the front contacts respectively controlled by the bridging member 80 respectively terminate the conductors 62 and 97. The terminals of the capacitor C are bridged across the conductor 87 and a conductor 91.

The winding of the extract relay ER is bridged across the conductors 62 and 89; the switch springs 81, 82 and 83 respectively terminate the conductor 91, the conductor 95 and a conductor 92; and the switch springs 84, 85 and 86 respectively terminate the conductor 87, a conductor 93 and a conductor 94. The winding section 44*a* of the main winding 44 is bridged across the conductors 62 and 94; and the winding section 44*b* of the main winding 44 is bridged across the conductors 62 and 92. The winding section 45*a* of the main winding 45 is bridged across the conductors 62 and 93; and the winding section 45*b* of the main winding 45 is bridged across the conductors 96 and 97.

Considering now the general mode of operation of the clothes washing machine 10, and referring to FIG. 1, it will be understood that the water and the clothes to be washed are placed into the wash tub 33 through the aligned top openings 24 and 37 in any suitable manner, not shown. Thereafter, in order to carry out a washing operation upon the clothes contained in the wash tub 33, the main winding 45 of the electric motor 40 is energized alternately with opposite polarities from the source of electric power, whereby the rotor 43 is oscillated within the stator 41 causing corresponding and direct oscillation of the wash tub 33 within the drain tub 26, with the result that the vanes 38 arranged in the wash tub 33 agitate the clothes and the wash water contained in the wash tub 33, so as to produce a clothes-washing action upon the clothes in a known manner.

Thereafter, the clothes are subjected to a water-extracting action; and in order to accomplish this, the main winding 44 of the electric motor 40 is energized continuously with a given polarity from the source of electric power, whereby the rotor 43 is rotated continuously in a given direction within the stator 41 causing corresponding and direct rotation or spinning of the wash tub 33, so that the water and the clothes contained in the wash tub 33 are subjected to centrifugal forces. Specifically, the water climbs the upwardly and outwardly directed side wall 35 of the wash tub 33 and is flung through the holes 35*a* formed therein at the bottom of the guard rim 36. Thereafter, the clothes are pressed against the side wall 35 of the spinning wash tub 33 to express the wash water therefrom, all in a conventional manner, the guard rim 36 preventing throwing of the clothes over the top of the wash tub 33 into the drain tub 26. Of course, the wash water flung from the wash tub 33 is caught in the drain tub 26 and may be pumped, or otherwise discharged therefrom, by conventional facility, not shown. After completion of the water-extracting action upon the clothes contained in the wash tub 33, the main winding 44 of the electric motor 40 is deenergized; whereupon rotation of the wash tub 33 soon ceases, so that the clothes may then be removed from the wash tub 33 through the aligned top openings 37 and 24 to the exterior.

Reverting to the construction and arrangement of the electric motor 40, it is noted that a 12-pole induction motor has a synchronous speed of 600 r.p.m., and a slip speed of about 5% under full-load conditions, whereby the rotor 43 has a run speed of about 570 r.p.m. under full-load conditions in response to continuous energization of the main winding 44 from the source of electric power; which speed is quite satisfactory for the water-extracting action upon the clothes contained in the wash tub 33. On the other hand, a 60-pole induction motor has a synchronous speed of 120 r.p.m., and is designed with a high slip so the speed torque curve is similar to that of a series D.-C. motor in which peak torque occurs at standstill and it falls off as speed increases. The rotor is designed for high resistance to the 60-pole winding in order to provide this speed-torque character and for normal resistance to the 12-pole winding so normal slip occurs. The main winding 45 is not energized continuously from the source of electric power, but rather, alternately with oppoiste polarities therefrom, as explained above. It will be understood that the starting torque of the electric motor 40 under its 60-pole winding is substantially higher than is the starting torque of the motor 40 under its 12-pole winding, with the result the alternately starting-stopping-restarting in the oscillation of the rotor 43 with respect to the stator 41, in the washing cycle of the machine 10, may be more efficiently carried out (with less heating) with the 60-pole electric motor 40 than with the 12-pole electric motor 40. The rate of oscillation of the rotor 43 with respect to the stator 41 not only depends upon the number of poles of the main winding 45, but also upon the load imposed thereupon by the wash tub 33. Further, the characteristic impedance of the induction winding 46, is a fundamental factor in establishing the starting characteristic of the electric motor 40 in response to energization of the main winding 45. Since the rate of oscillation of the wash tub 33 should fall in the general range 40 to 60 cycles per minute, centering about a rate of 50 cycles per minute at medium load, the impedance of the induction winding 46 is chosen so as to effect oscillation in the range mentioned, in response to energization alternately of the respective sections of the 60-pole main winding 45 of the electric motor 40. Of course, the run speed of the electric motor 40 as a 12-pole motor in response to energization continuously of the main winding 44 from the electric power source is dependent on the load; nevertheless, the spin speeds of the wash tub 33 at heavy-load, medium-load and light-load are within the range of about 570 to 590 r.p.m.

Considering now in greater detail the washing operation in conjunction with the control circuit 60 of FIG. 2, the operator actuates the selector switch 65 into its "wash" position and then actuates the master switch 64 into its "run" position. Operation of the master switch 64 into its run position closes the switch springs 67 and 68, so as to connect the line conductor 63 to the conductor 87, whereby the rectifier 66 is operated to impress a D.-C. potential upon the conductor or bus 90 with respect to the grounded conductor 62. It may be assumed that both of the limit switches LS1 and LS2 are open, so that both of the limit relays LR1 and LR2 are restored, the restored limit relay LR1 retaining restored the reverse relay RR. The application of A.-C. potential upon the conductor or bus 87 with respect to the grounded conductor 62 completes an obvious circuit for energizing the winding section 45*a* with a given polarity from the A.-C. source; while a circuit is completed for energizing the winding section 45*b* with a polarity from the A.-C. source, depending upon the position of the reverse relay RR. At

this time, when the reverse relay RR is restored, the circuit mentioned extends from the bus 87 via the capacitor C, the conductor 91, the closed switch springs 81, 82, the conductor 95, the contact bridging member 79 and its back contacts, the conductor 97, the winding section 45*b*, the conductor 96, and the contact bridging member 80 and its back contacts to the grounded conductor 62. Thus, a first polarity is employed to energize the winding section 45*b*; whereby the rotor 43 is rotated in a first direction with respect to the stator 41, so as to move the permanent magnet 49 into close proximity to the nearest one of the limit switches LS1 or LS2, depending upon the stop position of the rotor 43, when the main winding 45 is energized, as described above.

It may be assumed that the permanent magnet 49 first encounters the limit switch LS1; whereby the same is closed to energize the winding of the corresponding limit relay LR1 causing operation thereof. Upon operating, the limit relay LR1 completes at its contacts 74 a stick circuit for energizing the winding thereof, and interrupts at its contacts 73 a point in the stick circuit for energizing the winding of the limit relay LR2. Also, the limit relay LR1 completes at its contacts 75 an obvious circuit for energizing the winding of the reverse relay RR, so as to effect operation thereof. Upon operating, the reverse relay RR actuates the reversing switch 79, 80 from its restored position into its operated position; whereby the above-traced circuit for energizing the winding section 45*b* with the first polarity from the A.-C. source is interrupted, and an obvious reverse circuit for energizing the winding section 45*b* with a second and reverse polarity from the A.-C. source is completed. Accordingly, the rotor 43 is immediately dynamically braked and then rotated with respect to the stator 41 in the opposite or second direction, so that the permanent magnet 49 is rotated toward the limit switch LS2.

When the permanent magnet 49 is moved into close proximity to the limit switch LS2, the same is closed to energize the winding of the corresponding limit relay LR2 causing operation thereof. Upon operating, the limit relay LR2 prepares at its contacts 77 a stick circuit for energizing the winding thereof, and interrupts at its contacts 76 the stick circuit for energizing the winding of the limit relay LR1. The limit relay LR1 restores to complete at its contacts 73 the prepared stick circuit for energizing the winding of the limit relay LR2, and to interrupt at its contacts 75 the circuit for energizing the winding of the reverse relay RR. The reverse relay RR then restores to actuate the reversing switch 79, 80 from its operated position back into its restored position; whereby the above-noted circuit for energizing the winding section 45*b* with the second polarity from the A.-C. source is interrupted, and the above-traced circuit for energizing the winding section 45*b* with the first polarity from the A.-C. source is recompleted. Accordingly, the rotor 43 is immediately dynamically braked and then rotated with respect to the stator 41 in the opposite or first direction, so that the permanent magnet 49 is rotated toward the limit switch LS1.

When the permanent magnet 49 is moved into close proximity to the limit switch LS1, the same is closed to energize the winding of the corresponding limit relay LR1 causing reoperation thereof. Upon reoperating, the limit relay LR1 prepares at its contacts 74 its stick circuit for energizing the winding thereof, and interrupts at its contacts 73 the stick circuit for energizing the winding of the limit relay LR2, so as to cause the latter relay to restore and complete at its contacts 76 the stick circuit for energizing the winding of the limit relay LR1. Also, the limit relay LR1 completes at its contacts 75 the circuit for energizing the winding of the reverse relay RR, so as to effect reoperation thereof.

In view of the foregoing, it will be readily appreciated that the rotor 43 is oscillated within the stator 41 to effect the previously described washing action produced by oscillation of the wash tub 33. The oscillation of the rotor 43 between its limit positions alternately controls the limit switches LS1 and LS2, so as to effect alternate operation and restoration of the limit relays LR1 and LR2, whereby the reverse relay RR is alternately operated and restored, so as alternately to actuate the reversing switch 79, 80 between its two positions oppositely poling the winding section 45*b* of the main winding 45 of the motor 40, whereby the rotor 43 is oscillated, as described above.

At the conclusion of the washing operation, the operator initiates the water-extracting operation by operating the selector switch 65 from its "wash" position into its "extract" position, so as to open the switch springs 70, 72 and to close the switch springs 70, 71; whereby the D.-C. potential is removed from the conductor 90 and applied to the conductor 89. Removal of potential from the conductor 90 insures that both of the limit relays LR1 and LR2 and the reverse relay RR occupy their restored positions, with the result that reversing switch 79, 80 is positively returned into its restored position.

The application of potential upon the conductor 89 completes an obvious circuit for energizing the winding of the extract relay ER, so as to cause operation thereof. Upon operating, the extract relay ER interrupts at the switch springs 84, 85 the circuit for energizing the winding section 45*a*, interrupts at the switch springs 81, 82 the circuit for energizing the winding section 45*b*, completes at the switch springs 84, 86 an obvious circuit for energizing continuously the winding section 44*a* from the A.-C. source, and completes at the switch springs 81, 83 an obvious circuit for energizing continuously via the capacitor C the winding section 44*b* from the A.-C. source. Thus, at this time, the 60-pole winding 45 of the electric motor 40 is deenergized and the 12-pole winding 44 of the electric motor 40 is energized; whereby the rotor 43 is rotated continuously in the first direction with respect to the stator 41 effecting spinning of the wash tub 33, so as to carry out the water-extracting operation upon the clothes contained in the wash tub 33, in the manner previously explained.

In order to terminate the water-extracting operation, the operator restores the master switch 64 into its "stop" position, and then operates the selector switch 65 from its "extract" position into its "wash" position, so as to prepare the washing machine for another washing operation. When the master switch 64 is returned into its stop position, A.-C. power is removed from the conductor 87, with the result that operation of the electric motor 40 is arrested and operation of the rectifier 66 is terminated, so as to remove D.-C. potential from the conductor 88. Removal of potential from the conductor 88 insures deenergization of the relays LR1, LR2, RR and ER, so that they are restored. At this time all of the circuit elements of the control circuit 60 occupy their restored positions, as illustrated in FIG. 2.

Referring now to FIG. 3, a modified form of the clothes washing machine is contemplated, and thus a modified form of the control circuit 160 therefor is there illustrated. More particularly, this form of the washing machine may be identical to the washing machine 10, except that the electric drive motor 140 therefor comprises only one main winding 145, including the winding sections 145*a* and 145*b*, the main winding 145 being of 12-poles in this case. Thus, the circuit network 160 is substantially identical to the circuit network 60, except the extract relay ER may be eliminated from the circuit network 160 since, the motor 140 comprises the single main winding 145, as noted above.

While the reference numerals 161, 162, 163, etc., have been applied to the circuit network 160 of FIG. 3, respectively corresponding to the reference numerals 61, 62, 63, etc., in the circuit network 60 of FIG. 2, the details of operation of the circuit network 160 are not repeated in the interest of brevity, since the mode of operation of the circuit network 160 will be obvious from

an inspeciton of FIG. 3, in view of the full description of the mode of operation of the circuit network **60** of FIG. 2, as previously set forth. In passing, it is noted that in the washing operation of the machine, the wash tub is oscillated at a rate within the range 40 to 60 cycles per minute, notwithstanding the utilization of the 12-pole motor **140**, since this 12-pole motor **140** has a relatively low starting torque, as compared to the 60-pole motor **40**. Moreover, the electrical losses in the motor **140** are substantially greater than in the motor **40**. Of course the water-extracting operations of the machines are identical since the motor **140** also operates as a 12-pole motor in the water-extracting operation, as previously explained in conjunction with the circuit network **60** of FIG. 2.

While the electrical performance of the 12-pole motor **140** is inferior to that of the 60-pole/12-pole motor **40**, for the reasons explained above, the motor **140** is substantially cheaper than the motor **40**; whereby there are advantages to each motor depending upon whether performance or cost is of prime importance.

Referring now to FIG. 4, the modified form of the clothes washing machine **220** there illustrated is substantially identical to the machine **20** of FIG. 1, except in this case the bottom wall **234** of the wash tub **233** is counted in an enlarged opening provided in the diaphragm **225**, so that the bottom wall **234** actually projects below the diaphragm **225** and into the top of the machinery compartment **227**. In the arrangement, the central portion **234***a* of the bottom wall **234** is downwardly depressed to provide an annular rim section **234***b* that rigidly carries the inner race **231***a* of a bearing member **231**, the outer race **231***b* of the bearing member **231** being rigidly supported in the previously mentioned opening provided in the diaphragm **225**. Also, a plurality of balls are arranged between the races **231***a* and **231***b* to complete the bearing member **231**. Finally, a suitable annular packing element **231***x* is carried by the stationary outer bearing race **231***b* and arranged in sealed engagement with the bottom wall **234** of the wash tub **235**, so as to prevent the leakage of wash water from the drain tub **226** into the machinery compartment **240**.

In the machine **220**, the electric drive motor **240** may be identical to the electric drive motor **40**, comprising the stator **241** carrying the two main windings **244** and **245**, and the rotor **243** carrying the induction winding **246**. In this arrangement, the shaft **228** terminates at the upper end of the rotor **243**, and the upper end of the induction winding **246** and the upper end of the rotor **243** are secured directly to the central section **234***a* of the bottom wall **234** and in good heat-exchange relation therewith. Thus, the heat that is developed in the induction winding **246** and in the rotor **243** is conducted directly into the central section **234***a* of the bottom wall **234** of the wash tub **235**; which heat effects desired heating of the wash water and the clothes contained in the wash tub **235** in the washing operation of the machine **220**, in a very advantageous manner.

The mode of operation of the machine **220** in conjunction with the circuit network **60** of FIG. 2, is the same as that previously described in connection with the machine **20** of FIG. 1; whereby this operation is not reiterated in the interest of brevity.

Also, it will be understood that the machine **220** may comprise the motor **140** of 12-poles, instead of the motor **240** of 60-poles/12-poles, as described above; whereby then the machine **220** would employ the circuit network **160** of FIG. 3, and then the mode of operation thereof would be the same as that of the machine **20** as described in connection with the control circuit **160**.

Referring now to FIGS. 5 to 7, inclusive, the modified form of the clothes washing machine **320** there illustrated is substantially identical to the machine **220** of FIG. 4, except that a different form of electric drive motor **340** is incorporated therein. More particularly, this motor **340** is illustrated as being of 12-poles (similar to the motor **140**), but it may be of 60-poles/12-poles (similar to the motor **40**). Specifically, in the machine **320**, the wash tub **325** has a flat bottom wall **334** that is mounted directly upon the disk **332** carried upon the upper end of the shaft **328**. Also, the bottom wall **334** carries an annular member **334***a* rigidly secured thereto; which annular member **334***a* is mounted in a centrally disposed opening provided in the diaphragm **325** by a bearing member **331***a*–**331***b* of the ball bearing type previously described, and provided with the annular packing element **331***x*.

The motor **340** comprises an annular stator **341** carried by an annular plate **342***a* supported by a number of radially disposed arms **342***b* secured to the casing, not shown; and the stator **341** carries the main winding **345**. Also, the motor **340** comprises an annular rotor **343** directly secured in place within a depending annular flange **334***b* carried by the annular member **334***a*; and also, the rotor **343** carries an induction winding **346**. The induction winding **346** includes inner and outer conducting bands **346***a* and **346***b* and a plurality of radially disposed conducting bars **346***c* interconnecting the bands **346***a* and **346***b*. In the motor **340** the annular stator **341** is positioned immediately below the annular rotor **343**, so as to provide a narrow annular magnetic field gap therebetween, the magnetic field members **341** and **343** being disposed in longitudinally spaced-apart relation along the upstanding shaft **328**.

The mode of operation of the clothes washing machine **320** incorporating the electric drive motor **340** is the same as that of the machine **220** incorporating the motor **140**, as previously explained. Of course, the motor **340**, also embodies the advantageous feature that the induction winding **346**, the rotor **343** and the bottom wall **334** of the wash tub **333** are arranged in good heat-exchange relation with each other for the purpose previously explained.

Referring now to FIGS. 8 and 9, the modified form of the clothes washing machine **420** there illustrated is identical to the machine **320** of FIGS. 5 to 7, inclusive, except that a different form of electric drive motor **440** is incorporated therein. More particularly, this motor **440** is illustrated as being of 12-poles (similar to the motor **140**), but it may be of 60-poles/12-poles (similar to the motor **40**). Specifically, the motor **440** comprises a plurality of stator units, four being selected as an example, the four stator units being indicated at **441A**, **441B**, **441C** and **441D**, and a single rotor **443** cooperating therewith. The stator units **441A**, **441B**, **441C** and **441D** are of linear form and respectively carry main windings **445A**, **445B**, **445C** and **445D**, that respectively comprise two sections each, as best illustrated in FIG. 10, at **445A***a*, **445A***b* and **445B***a*, **445B***b* and **445C***a*, **445C***b* and **445D***a*, **445D***b*.

As shown in FIG. 10, the circuit control network **560** there illustrated for controlling the electric motor **440** may be identical to the circuit network **160** of FIG. 3; whereby the junction points common to the two circuits are indicated at **JP1**, **JP2**, and **JP3** in both FIGS. 3 and 10. Thus, in FIG. 10, the junction points **JP1**, **JP2** and **JP3** respectively terminate the conductors **596**, **597** and **587** respectively corresponding to the conductors **196**, **197** and **187** in FIG. 3; also, the grounded conductor **562** in FIG. 10 corresponds to the grounded conductor **162** in FIG. 3. Hence, in FIG. 10, the four winding sections **445A***a*, **445B***a*, **445C***a* and **445D***a* are connected in parallel between the conductors **596** and **597**; and the four winding sections **445A***b*, **445B***b*, **445C***b* and **445D***b* are connected in parallel between the conductors **562** and **587**.

Each of the winding units **445A**, **445B**, **445C** and **445D** is coupled to the single induction winding **446**; whereby, in effect, the stator unit **441A** and the common rotor **443** comprise a first 12-pole electric motor, the stator unit **441B** and the common rotor **443** comprise a second 12-pole electric motor, the stator unit **441C** and the common rotor **443** comprise a third 12-pole electric motor, and the stator unit **441D** and the common rotor **443** comprise a

fourth 12-pole electric motor. These four electric motors operate in parallel to oscillate and to rotate the shaft **428** for the respective washing and water-extracting purposes in the machine **420**, as previously explained.

Of course, the motor **440**, also embodies the advantageous feature that the induction winding **446**, the rotor **443** and the bottom wall **434** of the wash tub **433** are arranged in good heat-exchange relation with each other for the purpose previously explained.

In the motor **440**, each of the field members or stator units **441A**, **441B**, etc., has a substantially linear configuration having a longitudinal axis disposed substantially tangential to the center line of the common rotor **443**, all as shown in FIGS. 8 and 9.

In connection with the electric drive motors **340** of FIGS. 5 to 7, inclusive, and **440** of FIGS. 8 to 10, inclusive, it is pointed out that the illustrated form of the induction windings **346** and **446** is most advantageous, as the separate and distinct conductor bars interconnecting the associated inner and outer rings channelize the induced currents in the induction windings **346** and **446**, so as to maximize the starting torques of the motors **340** and **440** by virtue of the improved "Lenz effect." However, it will be understood that such arrangement of the induction winding is not critical to operation of an induction motor of this character; whereby the induction winding may comprise a simple single annular ring of good electrical conducting material, such as copper, aluminum, etc., as is well understood in the electric motor art. The last-mentioned arrangement may be employed in order deliberately to increase the RI^2 losses in the induction winding, so as to maximize the heating effect upon the bottom wall of the wash tub. In fact, the bottom wall of the wash tub itself may comprise the induction winding, by omitting the magnetic field element of the rotor, but this form of the electric motor has an undesirably low starting torque, as is well understood in the electric motor art.

In view of the foregoing it is apparent that there has been provided a clothes washing machine of improved construction and arrangement, and involving a transmission, that incorporate no mechanical gearing or equivalent complicated devices, that fundamentally comprise only a reversible electric motor selectively controllable to cause washing and water-extracting operations to be carried out upon the clothes. Also the selective control of the electric motor is effected by an improved arrangement of manually operable switches that is very economical to manufacture. Further, the control of the electric motor in the washing operation employs an electrical cycle mechanism of improved connection and arrangement that is automatic and positive in operation.

While there has been described what are at present considered to be the preferred embodiments of the invention, it will be understood that various modifications may be made therein, and it is intended to cover in the appended claims all such modifications as fall within the true spirit and scope of the invention.

What is claimed is:

1. In a clothes washing machine including a support and an upstanding clothes-receiving tub mounted for rotation upon said support, said tub being characterized by oscillation about its upstanding axis to effect washing of the contained clothes and by rotation continuously about its upstanding axis to effect centrifugal water extracting from the contained clothes; the combination comprising an electric motor including a stator mounted upon said support and a rotor mounted upon said tub, whereby movement of said rotor relative to said stator causes direct and corresponding movement of said tub, operatively related stator and rotor windings respectively carried by said stator and by said rotor, a source of electric power, selective energization of said stator winding with first and second polarities from said source effecting rotation of said rotor with respect to said stator in corresponding first and second directions, a reversing switch having first and second positions respectively poling said stator winding for energization with corresponding first and second polarities from said source, a master switch having a stop position disconnecting said source from said reversing switch and a run position connecting said source to said reversing switch, whereby operation of said master switch into its run position effects energization of said stator winding with a polarity from said source corresponding to the position of said reversing switch, cycle mechanism selectively operative between first and second control positions respectively actuating said reversing switch into its corresponding first and second positions, a selector switch having wash and extract positions, joint operation of said master switch into run position and operation of said selector switch into its wash position conditioning said cycle mechanism for cyclic operation, and limit mechanism selectively operative between first and second limit positions for respectively operating said conditioned cycle mechanism between its corresponding first and second control positions, said limit mechanism being selectively operative between its first and second limit positions in response to rotation of said rotator into corresponding first and second limit positions, whereby said joint operation of said master switch into its run position and operation of said selector switch into its wash position effects energization of said stator winding alternately with said first and second polarities from said source so that said tub is oscillated to carry out a clothes-washing operation upon the contained clothes, operation of said selector switch into its extract position positively operating said cycle mechanism into its first control position, whereby said joint operation of said master switch into its run position and operation of said selector switch into its extract position effect energization of said stator winding continuously with said first polarity from said source so that said tub is rotated continuously to carry out a water-extracting operation upon the contained clothes.

2. The clothes washing machine combination set forth in claim **1**, wherein said limit mechanism includes first and second limit switches respectively mounted in angularly spaced-apart limit positions upon said support and a control element mounted upon said rotor and rotatable therewith and respectively cooperating with said first and second limit switches when said rotor is rotated respectively into said first and second limit positions.

3. The clothes washing machine combination set forth in claim **2**, wherein each of said limit switches comprises an armature that is actuated in response to rotation of said cooperating control element into close proximity thereto as said rotor is rotated into the corresponding one of said limit positions, and a pair of contacts governed by actuation of said armature.

4. The clothes washing machine combination set forth in claim **1**, wherein said electric motor essentially comprises a substantially annular stator provided with a longitudinal axis, and a substantially cylindrical rotor provided with a longitudinal axis common to that of said stator, said stator being arranged in surrounding relation with said rotor and spaced radially outwardly therefrom to provide a substantially cylindrical magnetic field gap therebetween.

5. The clothes washing machine combination set forth in claim **1**, wherein said electric motor essentially comprises a substantially annuular stator provided with a longitudinal axis, and a substantially annular rotor provided with a longitudinal axis common to that of said stator, said stator being arranged in longitudinally spaced-apart relation with said rotor to provide a substantially annular magnetic field gap therebetween.

6. The clothes washing machine combination set forth in claim **1**, wherein said electric motor essentially comprises a substantially linear stator provided with a lateral axis, and a substantially annular rotor provided with a

longitudinal axis disposed substantially normal to the lateral axis of said stator and in offset relation with respect thereto, said stator being disposed in longitudinal spaced-apart relation with said rotor to provide a substantially rectilinear magnetic field gap therebetween.

7. In a clothes washing machine including a support and an upstanding clothes-receiving tub mounted for rotation upon said support, said tub being characterized by oscillation about its upstanding axis to effect washing of the contained clothes and by rotation continuously about its upstanding axis to effect centrifugal water extracting from the contained clothes; the combination comprising an induction motor including a stator mounted upon said support and a rotor mounted upon said tub, whereby movement of said rotor relative to said stator causes direct and corresponding movement of said tub, a first stator winding carried by said stator and having M poles, a second stator winding carried by said stator and having N poles, wherein M and N are even numbers and N is substantially larger than M, a rotor winding carried by said rotor and commonly inductively coupled to said first and second stator windings, a source of A.-C. electric power, first circuit control means for energizing said second stator winding alternately with first and second polarities from said source, whereby said tub is oscillated at a relatively low frequency to carry out a clothes-washing operation upon the contained clothes, and second circuit control means for energizing said first stator winding continuously with a given polarity from said source, whereby said tub is rotated continuously at a relatively high speed to carry out a water-extracting operation upon the clothes contained in said tub.

8. The clothes washing machine combination set forth in claim 7, wherein M is about 12 and N is at least as great as about 60.

9. In a clothes washing machine including a support and an upstanding clothes-receiving tub mounted for rotation upon said support, said tub being characterized by oscillation about its upstanding axis to effect washing of the contained clothes and by rotation continuously about its upstanding axis to effect centrifugal water extracting from the contained clothes; the combination comprising an induction motor including a stator mounted upon said support and a rotor mounted upon said tub, whereby movement of said rotor relative to said stator causes direct and corresponding movement of said tub, a first stator winding carried by said stator and having M poles, a second stator winding carried by said stator and having N poles, wherein M and N are even numbers and N is substantially larger than M, a rotor winding carried by said rotor and commonly inductively coupled to said first and second stator windings, a source of A.-C. electric power, a master switch having stop and run positions, a selector switch having wash and extract positions, first circuit control means responsive jointly to operation of said master switch into its run position and to operation of said selector switch into its wash position for energizing said second stator winding alternately with first and second polarities from said source, whereby said tub is oscillated at a relatively low frequency to carry out a clothes-washing operation upon the contained clothes, and second circuit control means responsive jointly to operation of said master switch into its run position and to operation of said selector switch into its extract position for energizing said first stator winding continuously with a given polarity from said source, whereby said tub is rotated continuously at a relatively high speed to carry out a water-extracting operation upon the clothes contained in said tub.

10. In a clothes washing machine including a support and an upstanding clothes-receiving tub mounted for rotation upon said support, said tub being characterized by oscillation about its upstanding axis to effect washing of the contained clothes and by rotation continuously about its upstanding axis to effect centrifugal water extracting from the contained clothes; the combination comprising an induction motor including a stator mounted upon said support and a rotor mounted upon said tub, said stator including a plurality of first field members arranged in angularly spaced-apart positions disposed substantially concentric with the upstanding axis of said tub, said rotor including a single second field member of substantially annular form disposed substantially concentric with the upstanding axis of said tub and commonly cooperating with said first field members, a plurality of main windings respectively carried by said first field members, a single induction winding carried by said second field member and commonly inductively coupled to said main windings, a source of A.-C. electric power, first circuit control means for energizing said main windings in parallel relation alternately with first and second polarities from said source, whereby said tub is oscillated to carry out a clothes-washing operation upon the contained clothes, and second circuit control means for energizing said main windings in parallel relation continuously with a given polarity from said source, whereby said tub is rotated continuously to carry out a water-extracting operation upon the clothes contained in said tub.

11. The clothes washing machine set forth in claim 10, wherein said second field member is mounted directly upon the bottom of said tub and positioned in a substantially horizontal upper plane, and said first field members are mounted directly upon said support and positioned in a substantially horizontal lower plane, said upper and lower planes being positioned immediately adjacent to each other.

12. The clothes washing machine set forth in claim 10, wherein each of said first field members has a substantially linear configuration having a longitudinal axis disposed substantially tangential to the center line of said second field member.

References Cited by the Examiner

UNITED STATES PATENTS

1,722,984	7/29	Hendry	68—23 X
1,816,033	7/31	Wilsey	68—15
2,897,387	7/59	Welter	310—268
2,986,915	6/61	Nau	68—12

FOREIGN PATENTS

609,695	8/26	France.
477,384	6/29	Germany.

WALTER A. SCHEEL, *Primary Examiner.*

WILLIAM I. PRICE, *Examiner.*