Nov. 17, 1970 E. J. CASTELLANI 3,541,496

TERMINAL

Filed Dec. 21, 1967

FIG. 1

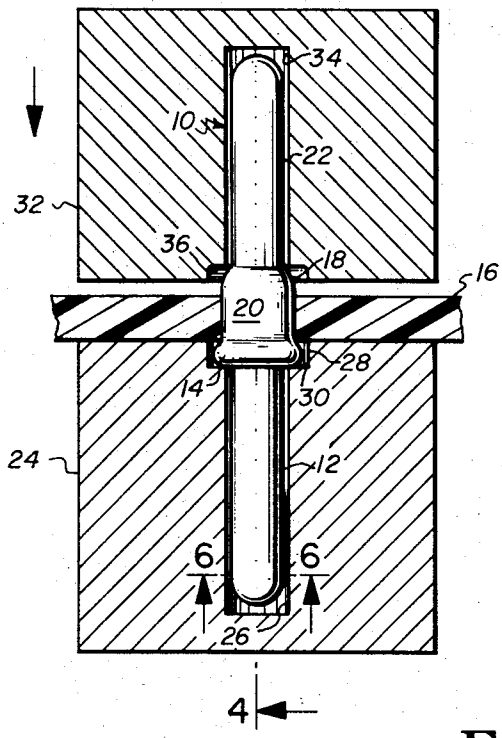

FIG. 2

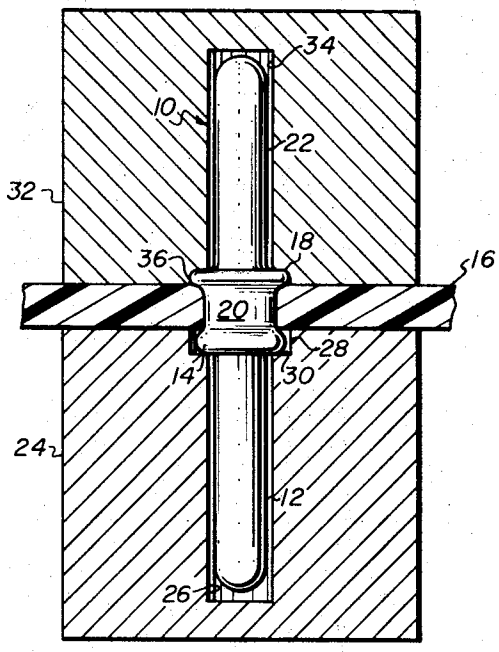

FIG. 4

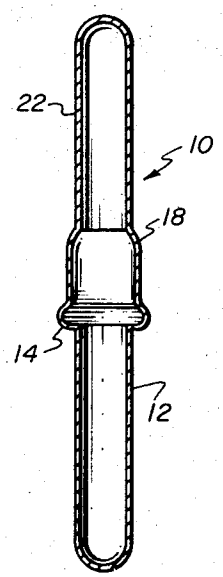

FIG. 3

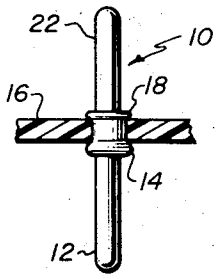

FIG. 5

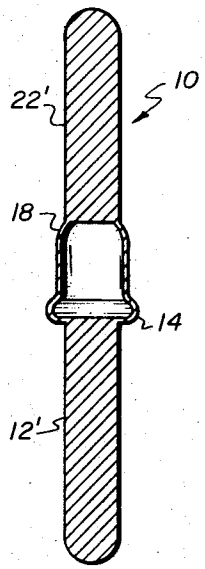

FIG. 6

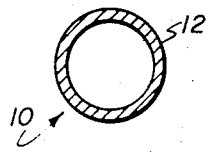

FIG. 7

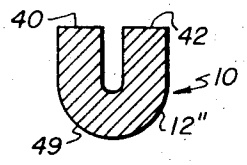

INVENTOR.
EDWARD J. CASTELLANI
BY David Castellani
ATTORNEY

United States Patent Office 3,541,496 Patented Nov. 17, 1970

3,541,496

TERMINAL

Edward J. Castellani, South Plainfield, N.J., assignor to Thomas & Betts Corporation, Elizabeth, N.J., a corporation of New Jersey

Filed Dec. 21, 1967, Ser. No. 692,507
Int. Cl. H01r 9/16
U.S. Cl. 339—220 4 Claims

ABSTRACT OF THE DISCLOSURE

The invention is directed to a feed through contact pin and more particularly to a contact pin adapted to be staked to a terminal board or other supporting surface. The pin is provided with a first contact portion having a shoulder coupled thereto. The shoulder is brought into contact with a first surface of the supporting member. A deformable staking portion coupled to the shoulder, and further coupled to a second contact portion which extends beyond the other surface of the supporting member, is positioned in an aperture in the supporting member. The first contact portion is then placed in a first portion of a staking die set having a nest shaped the same as that of the first contact portion and of the shoulder. The second portion of the die set is then positioned over the second contact portion, said second portion having a shape similar to the second contact portion as well as providing for the desired shape of a shoulder to be formed from the deformable staking portion. The die set is then closed by press means against the deformable staking portion, which staking portion is then deformed to form a shoulder on the opposite side of the supporting member from that provided by the shoulder of the first contact portion. Thus an intimate and positive connection between the supporting member and the contact pin is established.

BACKGROUND OF THE INVENTION

Field of the invention

The invention is generally directed to the field of contact blocks to provide for the interconnection of various electrical components. The invention is equally suited to connection to conductors whether by soldering, wire wrapping or similar techniques or may be employed with detachable contact pins or terminals.

DESCRIPTION OF THE PRIOR ART

Contact pins, as are commonly found in the prior art, and which will provide contact surfaces on both sides of a supporting member, are of three general types. The first type is the so called snap-in type which provides two contact portions and a portion of a shank of decreased diameter which must be snapped into place in an aperture within a supporting member. Such snap-in contact pins require that the supporting member, or terminal board upon which they are to be mounted, be semirigid and yieldable around the portion of the terminal board or aperture which is to receive the snap-in contact pin. This is required so that the surrounding wall of the aperture will expand at the time that the snap-in contact pin is inserted into position. If a rigid type of board were employed the attempted insertion of a snap-in type of contact pin will cause the destruction of the board or at least a fracture of that portion of the board adjacent the aperture in which the contact pin is to be placed. Such contact pins are not useable with rigid type terminal boards. In addition, the thickness of the terminal board must be carefully chosen to match the spacing between the various shoulder elements of the snap-in contact pin; otherwise, a loose fit would result and the contact pin would be free

to move in a direction perpendicular to the surface of the board. A wide variety of sizes of snap-in contact pins is required for use with varying thicknesses of terminal boards.

A second type of contact pin found in the prior art, which provides a double-ended terminal contact pin, is the type which is snapped together upon installation. In a typical device of this type a first contact portion is inserted within the terminal board and has at one end thereof a shoulder to be brought into contact with a first surface of the supporting member or terminal board. A second portion of the contact pin is then brought in from the opposite side of the terminal board and snapped into position within first contact portion. Again, variations in the thickness of the terminal board must be met by different sized contact pins to properly match the spacing between the shoulder of the contact pin when assembled. Failure to match the contact pin to the thickness of the terminal board will result in an improper coupling between the two contact portions and result in an easily separable contact pin. Additionally, the ability to separate the contact portions is dependent upon the type of fit achieved between the two contact pin portions as assembled. Some degree of force exerted on either one of the contact pins will usually result in separation of the two portions of the double-ended terminal.

The third type of contact pin found in the prior art is that which is staked to position in the terminal board. This type of device generally provides a number of cut-out sections whose intermediate lands will form the second shoulder of the contact pin when staked. However, contact between the terminal board and the shoulder formed due to the staking operation is incomplete in a sense that only a portion of the terminal board surface is contacted by the formed shoulder of the contact pin. As a result the contact pin is often free to rotate forming an unstable contact. Additionally, due to the cut-out portions of the contact pin the overall contact pin is greatly weakened and may be easily broken off at the terminal board.

SUMMARY OF THE INVENTION

The present invention overcomes the difficulties noted above with respect to the three representative types of prior art contact pins. This is done by providing a unitary feed through contact pin which includes a lower contact portion terminating in a shoulder which is made to abut one surface of a supporting member such as a terminal board, a deformable shank portion which passes through an aperture in the terminal board and which will provide a second shoulder on the opposite surface of the terminal board and a second contact pin coupled to the deformable shank portion. A set of dies, having nests therein, the first to receive the first contact portion and the shoulder and the second to receive the second contact portion and to form a shoulder on the opposite side of the terminal board are made to fit about the contact pin and to support the first contact portion and shoulder while forming the second shoulder. Because the contact pin is unitary it is not subject to separation as is true of the double-ended type of terminal which is snapped together for assembly. Further, since the deformable shank portion is made for a light press fit with the aperture in the terminal board it is not necessary that a semi-rigid terminal board be employed with this type of contact pin. Also, since the shoulder on the second surface of the terminal board is made at the time of crimping few limitations as to the thickness of the terminal board is placed upon this particular contact pin. Finally, since the shoulder formed in the crimping operation extends around the complete 360° periphery of the contact pin and since there are no apertures cut out within the contact pin it-

self, complete contact between the contact pin and the terminal board is achieved and the contact pin is not in any way weakened. It is therefore an object of this invention to provide an improved form of contact pin.

It is another object of this invention to provide an improved form of contact pin of the feed through type.

It is still another object of this invention to provide an improved form of contact pin having one preformed shoulder and a second shoulder formed during the attachment operation of the contact pin to a terminal board or other supporting member.

It is yet another object of this invention to provide an improved form of contact pin having high physical strength and which can be secured to terminal boards having a wide variety of thicknesses.

It is still another object of this invention to provide a unitary contact pin having first and second contact portions of a first wall thickness and an intermediate shank portion of lesser wall thickness adapted to be secured to a terminal board in a staking operation.

It is yet another object of this invention to provide an improved form of contact pin having solid contact portions.

It is yet another object of this invention to provide an improved form of contact pin having nonsymmetrical contact portions for the receipt of wire wrap connections.

Other objects and features of the invention will be pointed out in the following description and claims and illustrated in the accompanying drawings, which disclose, by way of example, the principle of the invention, and the best modes which have been contemplated for carrying it out.

BRIEF DESCRIPTION OF THE DRAWING

In the drawings:

FIG. 1 is a side elevation of a contact pin constructed in accordance with the concepts of the invention and shown positioned in a die set, shown in section.

FIG. 2 is a side elevation of the contact pin of FIG. 1 shown in the crimped position with the die set, shown in section, closed about the contact pin.

FIG. 3 is a side elevation of the connector pin of FIG. 1 completely installed upon a terminal board, shown in section.

FIG. 4 is a side elevation, in section, of the contact pin of FIG. 1 taken along the line 4—4.

FIG. 5 is a side elevation, in section, of a further embodiment of a contact pin constructed in accordance with the concepts of the invention also taken along a line similar to 4—4 of FIG. 1.

FIG. 6 is a sectional view, of the contact pin of FIG. 1, taken along the lines 6—6 of FIG. 1.

FIG. 7 is a sectional view of a further embodiment of a contact pin constructed in accordance with the concepts of the invention and taken along a line similar to 6—6 of FIG. 1.

Similar elements are given similar reference characters in each of the respective figures.

DESCRIPTION OF THE PREFERRED EMBODIMENTS

Turning now to FIG. 1 there is shown a contact pin **10** constructed in accordance with the concepts of the invention. The contact pin **10** has a first cylindrical contact portion **12** which has a uniform diameter along its entire length and which terminates in a shoulder **14**. The shoulder **14** is brought into contact with a first surface of a supporting member, or terminal board, such as **16**. The deformable shank portion **18**, coupled to the shoulder **14**, is passed through an aperture **20** in the terminal board **16**. The respective dimensions of the deformable shank portion **18** and the aperture **20** are so chosen that a light press fit is achieved between the deformable shank portion **18** and the aperture **20**. This will provide complete contact between the deformable shank portion **18** and the inner surface of the aperture **20**. The deformable shank portion **18** is coupled to a second cylindrical contact portion **22** having a uniform diameter along its entire length equal to that of the first cylindrical contact portion **12**. The use of uniform and equal first and second cylindrical contact portions without any enlargements at the ends thereof permits the use of the same female terminal connector with both contact portions.

The contact pin **10** is positioned into the nests of a die set having a lower die portion **24**. The first contact portion **12** will fit into the die nest **26** of the first die portion **24**. Die portion **24** also has a nest **28** having a transverse dimension approximately that of the shoulder **14**. The width nest **28** is slightly in excess of the width of the shoulder portion **14** and will provide a supporting shoulder **30** to contact the shoulder portion **14**. The extra width of the die nest **28** is provided to accept any expansion of the shoulder **14** during the staking operation to be described below. The upper die portion **32** has a die nest **34** to accept the second contact portion **22** and a further nest portion **36** which will form, from the deformable shank portion **18**, an additional shoulder to be described below. The die set comprising the lower die portion **24** and the upper die portion **32**, as shown in FIG. 1, in a position prior to the application of a crimping force to the contact pin **10**.

Turning now to FIG. 2, the upper die portion **32** and lower die portion **24** have been closed to stake the contact pin **10** to the terminal board **16**. As can be seen in FIG. 2, the closing of the die portions **24** and **32**, against the contact pin **10**, has caused the deformable shank portion **18** to deform forming a shoulder on the opposite side of the terminal board **16** from that upon which the shoulder **14** is positioned. FIG. 3 illustrates the completed coupling of the contact pin **10** to the terminal board **16** showing that the shoulder **14** is positioned adjacent the underside of the terminal board **16** while the deformable staking portion, which has been deformed by means of the die set **32**, now forms a shoulder on the upper surface of the terminal board **16**. a coupling, between the deformable shank portion **18** and the upper surface of the terminal board **16** is achieved along the entire periphery of the contact pin **10** and there are no weakened points which would permit the breaking off of the upper contact portion **22** as is found in the prior art devices described above.

In FIG. 4 there is shown a side elevation of a section of the contact pin **10**, of FIG. 1, taken along the line 4—4. This figure shows that the wall thickness of the first contact portion **12** and the second contact portion **22** are approximately the same and both are greatly in excess of the wall thickness of the shoulder **14** and the deformable shank portion **18**. In this manner the deforming of the deformable shank portion **18** and of the shoulder **14** are facilitated. It has been found that by constructing the contact pin **10** of a uniform wall thickness throughout, attempts to stake the contact pin **10** to a terminal board by deforming the deformable shank portion **18** generally results in the shearing of the material of the deformable shank portion causing destruction of the contact pin **10**.

The contact pin **10** of FIG. 4 may be constructed by first cutting from a planar sheet of metal a blank having the general shape of the contact pin **10**. The material will be chosen to have a thickness equal to the desired wall thickness of the contact portions **12** and **22**. The blank is then rolled to form the contact pin **10** and is then subjected to tensional forces at the contact portions **12** and **22** to cause the elongation and thus the decrease in the wall thickness of the shoulder **14** and the deformable shank portion **18**. The reduction in the wall thickness, at the shoulder **14**, and the deformable shank **18**, facilitates the forming of both of these portions and also permits full contact between the deformable shank portion in the aperture of a terminal board as a result of the staking operation. Further, the manner of staking of the

contact pin **10** to the terminal board, at the portion of the deformable shank **18**, prevents the distortion of either of the contact pin portions **12** or **22** during the staking operation. Such distortion often occurred in prior art devices which employed punched apertures and alternating lands to provide the desired upper shoulder during the crimping operation.

In FIG. 5 an alternative pin arrangement is shown. Instead of providing the hollow contact portions **12** and **22**, the contact portions **12'** and **22'** are provided as solid members. Deformable shank portion **18** and the shoulder **14** will still be provided with relatively thin wall thickness to accommodate the crimping operation as was described above.

Turning now to FIG. 6 there is shown a sectional view of the contact portion **12** of the contact pin **10** taken along the lines **6—6**. As can be seen, the contact portion **12** is hollow, and is of circular cross-section. However, although the pin is shown to have a circular cross-section any other convenient regular or nonregular geometric form can be employed, such as hexagonal, square, rectangular or the like. In FIG. 7 a variation of either, or both, of the contact portions **12** and **22** is shown. The first contact portion **12''** is shown to be U-shaped and to be made of solid material. This form is found extremely suitable for wire-wrap operations by providing two right angle contact points **40** and **42** required to hold the wire-wrap connection while the arcuate portion **44** provides the maximum contact surface between the wires wrapped about the contact portion **12''**.

While there have been shown and described and pointed out the fundamental novel features of the invention as applied to the preferred embodiments it will be understood that various omissions and substitutions and changes of the form and details of the devices illustrated and in their operation may be made by those skilled in the art, without departing from the spirit of the invention.

The embodiments of the invention in which an exclusive property or privilege is claimed are defined as follows:

1. A double ended contact pin adapted to be rigidly secured in an aperture in a mounting board by deformation of a portion thereof comprising: first and second oppositely directed, equal diameter, tubular, cylindrical contact portions having closed opposite ends; the outer surface of said contact pin being continuous and substantially uninterrupted; a hollow deformable, annular shank portion integral at its respective ends with one of said first and second contact portions; said shank portion securing said first and second contact portions together; said shank portion comprising: an enlarged annular shoulder adjacent said first contact portion for engagement with a first surface of a mounting board and a relatively enlarged, tubular portion adjacent said second contact portion dimensioned to pass through an aperture in a mounting board and adapted to be deformed into engagement with the second surface of said mounting board whereby said contact pin is rigidly coupled to said supporting member.

2. A contact pin as defined in claim **1** wherein the wall thickness of said shank portion is relatively less than the wall thickness of said first and second contact portions.

3. A double ended contact pin adapted to be rigidly secured in an aperture in a mounting board by deformation of a portion thereof comprising: first and second oppositely directed, axially aligned contact portions of solid cross-section; a hollow, deformable, annular shank portion integral at its respective ends with one of said first and second contact portions, said shank portion securing said first and second contact portions together; said shank portion comprising: an enlarged, annular shoulder adjacent said first contact portion for engagement with a first surface of a mounting board and a relatively enlarged, tubular portion adjacent said second contact portion dimensioned to pass through an aperture in a mounting board and adapted to be deformed into engagement with the second surface of said mounting board whereby said contact pin is rigidly coupled to said supporting member.

4. A contact pin as defined in claim **3** wherein a portion of the outer surface of one of said first and second contact sections is formed to provide a flattened surface along a substantial portion of its length; and a medial, longitudinal slot extending along said flattened surface of said formed contact portion extending from the surface of said contact portion towards the radial center thereof.

References Cited

UNITED STATES PATENTS

2,386,171	10/1945	Wild	339—275 X
2,533,987	12/1950	Bahr	339—220 X
3,128,813	4/1964	Davis et al.	151—41.72
2,673,336	3/1954	Peters	339—220
3,155,448	11/1964	Korsgren	339—94 X

FOREIGN PATENTS

942,245	2/1949	France.

RICHARD E. MOORE, Primary Examiner

U.S. Cl. X.R.

339—248