J. W. HILL.

CAR-AXLE BOXES.

No. 194,351. Patented Aug. 21, 1877.

Fig. 1

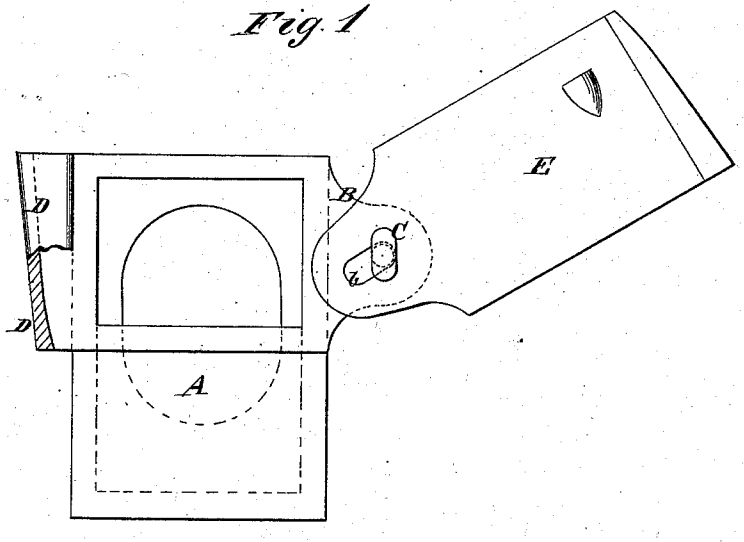

Fig. 2.

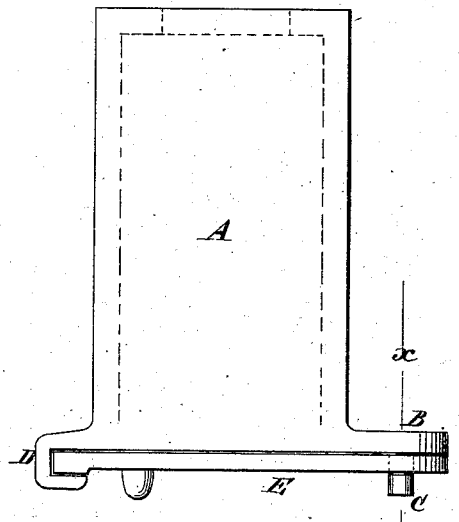

Fig. 3

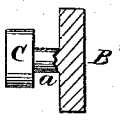

WITNESSES:

A. W. Strongvist

J. H. Scarborough.

INVENTOR:

BY J. W. Hill.

ATTORNEYS.

N. PETERS, PHOTO-LITHOGRAPHER, WASHINGTON, D. C.

UNITED STATES PATENT OFFICE.

JAMES W. HILL, OF SOUTH ST. LOUIS, MISSOURI.

IMPROVEMENT IN CAR-AXLE BOXES.

Specification forming part of Letters Patent No. **194,351**, dated August 21, 1877; application filed June 4, 1877.

To all whom it may concern:

Be it known that I, JAMES W. HILL, of South St. Louis, county of St. Louis, and State of Missouri, have invented a new and useful Improvement in Car-Axle Box, of which the following is a specification:

This invention relates to truck-boxes for railroad-car axles; and the nature of my invention consists in casting or otherwise applying to the outer face of a truck-box a button-head fastening in combination with an opening through one end of the lid or cover, whereby an inexpensive and safe attachment is secured, as will be hereinafter explained.

In the annexed drawings, Figure 1 is a front view of a car-truck box, showing the cover open. Fig. 2 is a top view, showing the cover shut. Fig. 3 is a section through dotted line *x x* on Fig. 2.

Similar letters of reference indicate corresponding parts in the three figures.

The letter A designates a truck-box for car-axles, on which I cast an ear, B, and a grooved jaw, D. C is a button-head, which may be cast on the face of the ear B, or it may be made of wrought-iron and cast into or riveted to the ear. This head C is formed on a contracted portion or neck, *a*, and it is preferably of an elliptical form, although I do not confine myself to this form.

The cap or cover E is constructed with an elliptical opening, *b*, through one end, the longest diameter of which is in a direction with the length of the cap, as shown in Fig. 1. When the cap is held upright the button-head can be passed through the hole *b* and turned upon the neck *a*. The cap is thus safely attached to the box A, and will not be liable to casual detachment whether it be left open or shut.

I am aware that the cover of a car-axle box has been hung on a bolt secured by a nut, but the nut is liable to jar off the bolt and allow the cover to drop.

What I claim is—

The combination, with box A, having ear B, with button-head C on the neck *a*, and provided with grooved jaw D, of the cover E, having the opening *b*, as and for the purpose specified.

JAS. W. HILL.

Witnesses:

WM. T. MASON,

DAVID BROWNLEE.