A. L. SOHM.

PRINTING MACHINE.

APPLICATION FILED JUNE 3, 1911.

1,082,774.

Patented Dec. 30, 1913.

5 SHEETS—SHEET 1.

Fig. 1.

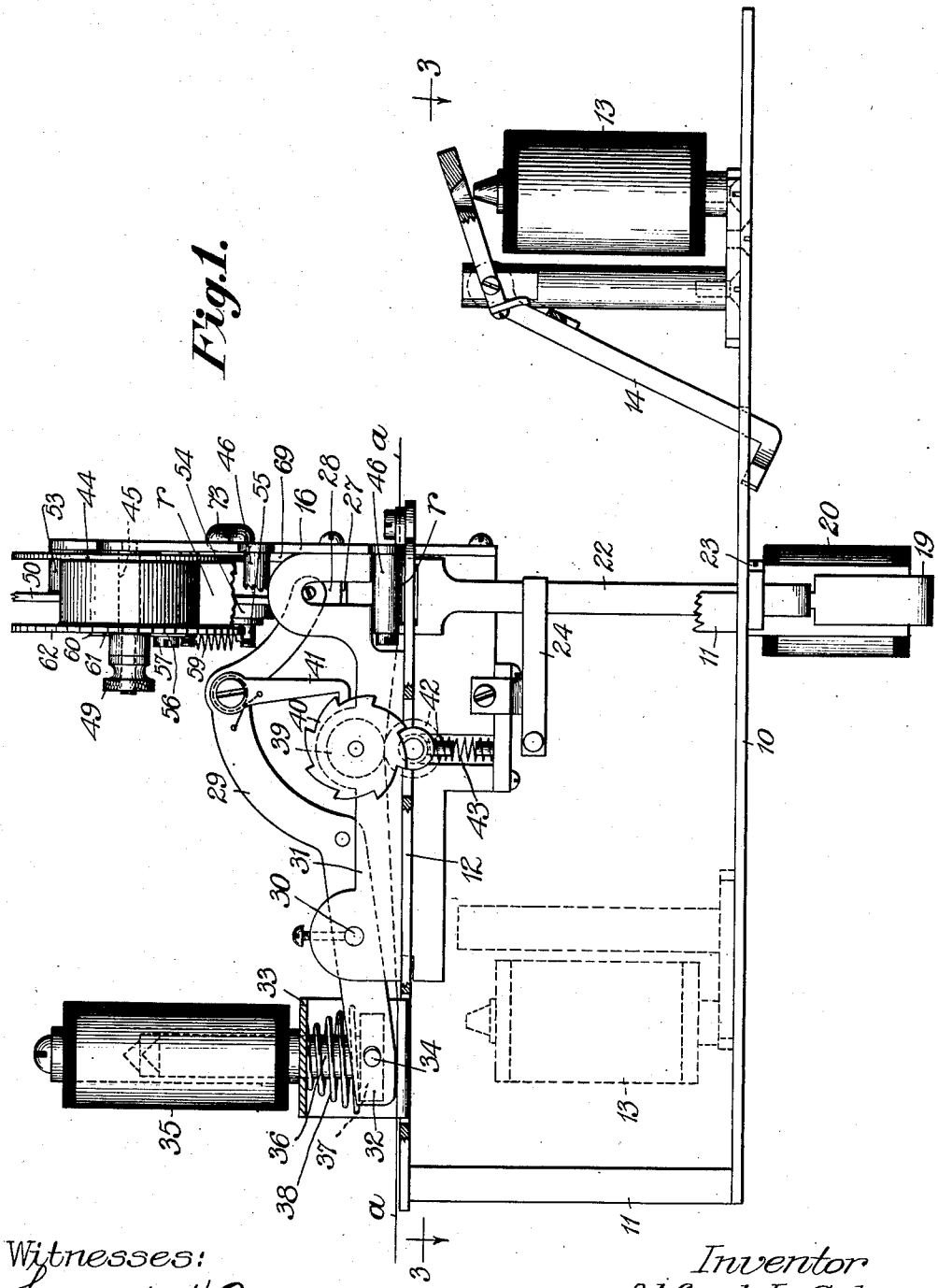

Witnesses:
Leonard W. Novander
Robert F. Bracke

Inventor
Alfred L. Sohm
By Brown & Williams
Attorneys

A. L. SOHM.

PRINTING MACHINE.

APPLICATION FILED JUNE 3, 1911.

1,082,774.

Patented Dec. 30, 1913.

5 SHEETS—SHEET 2.

Fig. 2.

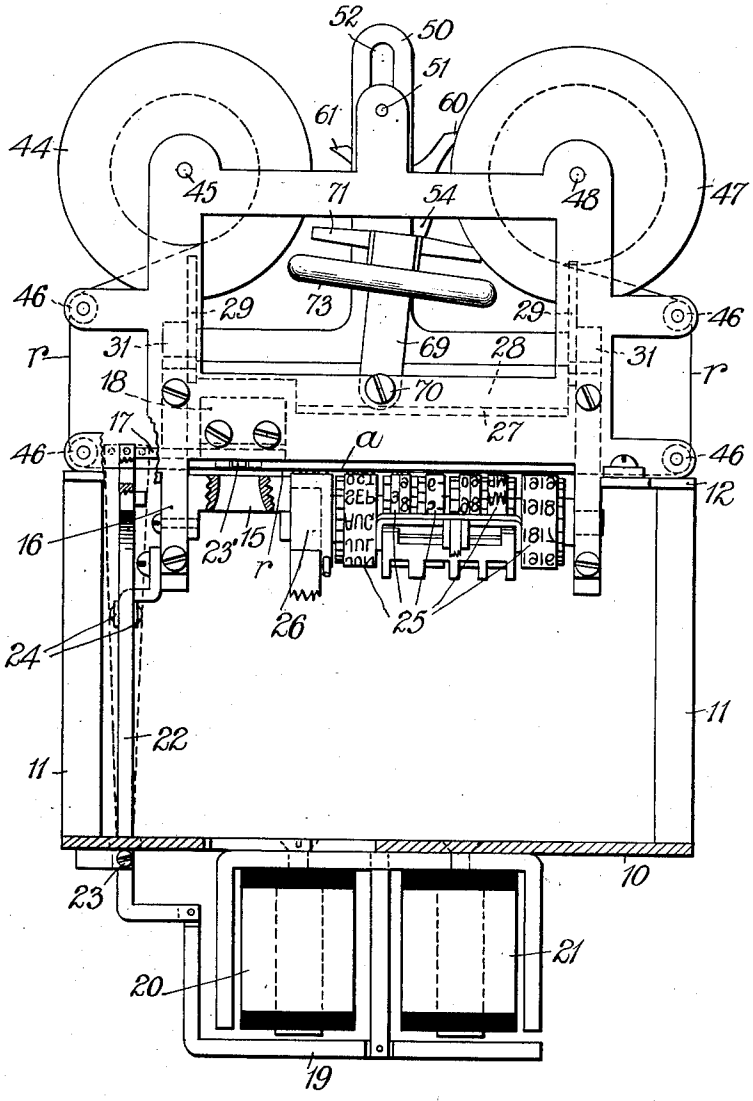

Witnesses:
Leonard W. Novander
Robert F. Bracke

Inventor
Alfred L. Sohm
By Drew & Williams
Attorneys

A. L. SOHM.

PRINTING MACHINE.

APPLICATION FILED JUNE 3, 1911.

1,082,774.

Patented Dec. 30, 1913.

5 SHEETS—SHEET 3.

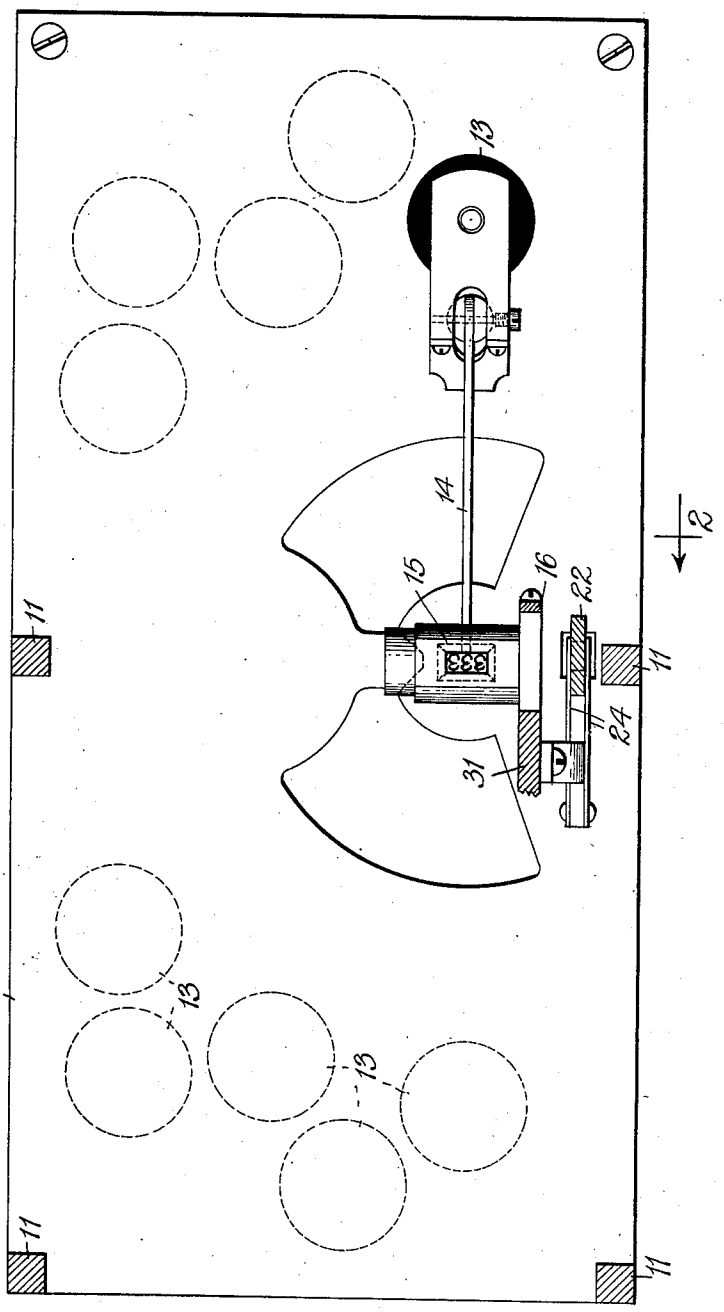

Fig. 3.

Witnesses:
Leonard W. Novander.
Robert F. Bracke

Inventor
Alfred L. Sohm
By Brown & Williams
Attorneys

A. L. SOHM.

PRINTING MACHINE.

APPLICATION FILED JUNE 3, 1911.

1,082,774.

Patented Dec. 30, 1913.

5 SHEETS—SHEET 4.

Fig. 4.

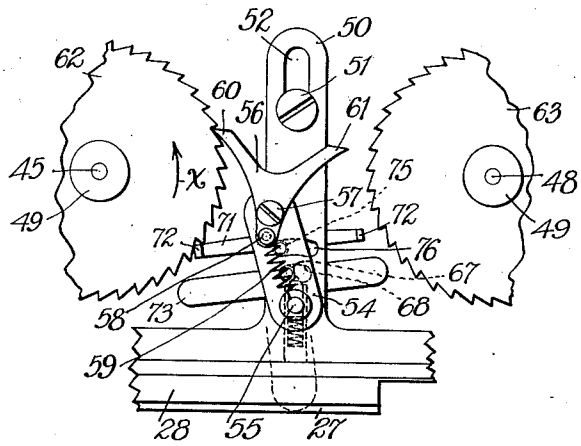

Fig. 5.

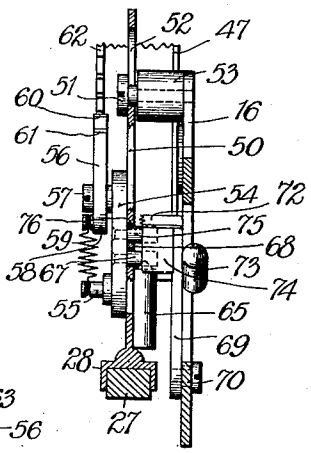

Fig. 7.

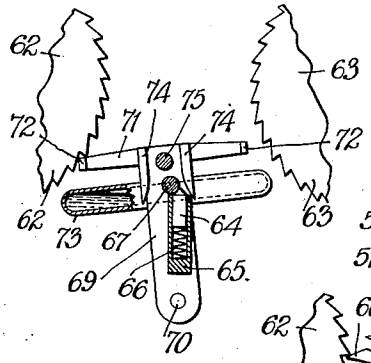

Fig. 6.

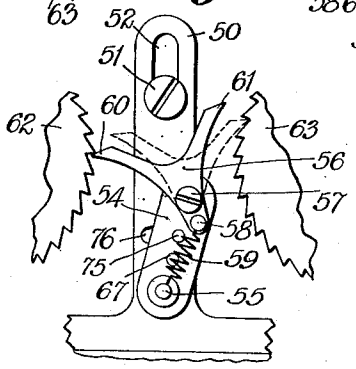

Witnesses:

Leonard W. Novander

Robert F. Bracke

Inventor

Alfred L. Sohm

By Brown & Williams

Attorneys

A. L. SOHM.

PRINTING MACHINE.

APPLICATION FILED JUNE 3, 1911.

1,082,774.

Patented Dec. 30, 1913.

5 SHEETS—SHEET 5.

Fig. 8.

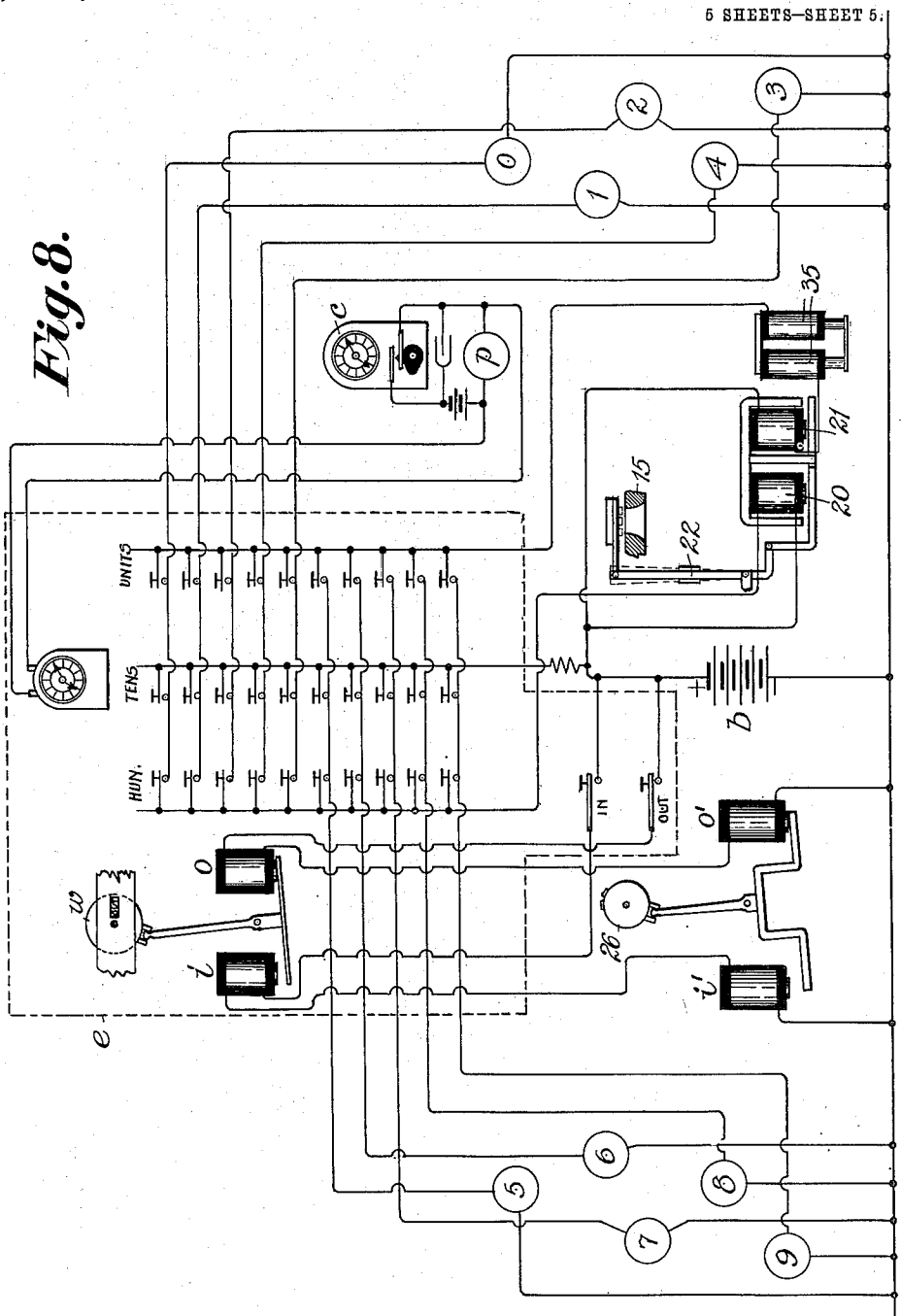

Witnesses:

Robert E. Bracke

Leonard W. Novander.

Inventor

Alfred L. Sohm

By Brown & Williams

Attorneys

UNITED STATES PATENT OFFICE.

ALFRED L. SOHM, OF LOS ANGELES, CALIFORNIA, ASSIGNOR TO SOHM ELECTRIC SIGNAL & RECORDING COMPANY, OF SPOKANE, WASHINGTON, A CORPORATION OF ARIZONA.

PRINTING-MACHINE.

1,082,774. Specification of Letters Patent. Patented Dec. 30, 1913.

Application filed June 3, 1911. Serial No. 631,033.

To all whom it may concern:

Be it known that I, ALFRED L. SOHM, a citizen of the United States, residing at Los Angeles, in the county of Los Angeles and State of California, have invented a certain new and useful Improvement in Printing-Machines, of which the following is a full, clear, concise, and exact description, reference being had to the accompanying drawings, forming a part of this specification.

My invention relates to printing machines and is particularly concerned with that class of machines wherein an inking ribbon travels between the paper, which is adapted to receive the printing, and the type, the platen being disposed at the back of the paper. In machines of this kind it is usual to run the inking ribbon between two spools and it is the practice to automatically shift the ribbon slightly after each printing operation, so that the printing may be even and the type always supplied with ink and so that the ribbon itself may, in its ordinary deterioration, do so evenly. In printing machines of the type referred to, it has been found convenient to utilize the mechanical operation, which brings the type and the platen together, to secure this shifting or travel of the ribbon. Thus, as in an ordinary typewriter, the ribbon runs from one spool to another, rotating power being applied to one spool to draw the ribbon in one direction or to the other spool to draw it in the other direction.

My invention is concerned with improved means for transmitting the motion of a movable platen or type bar to one or the other of the ribbon spools and with novel means for shifting the application of the power thus secured from one spool to the other when the ribbon has reached either limit of its travel.

My invention contemplates a simple and improved construction for the purpose set forth and for otherwise controlling the affected parts, as will be described, so as to secure positive and reliable operation.

It will appear, as this description proceeds that the device of my invention is applicable to many different forms of machines so long as they are of the general type referred to. It will be clear to those skilled in the art that my invention is adaptable to an electrically operated or a mechanically operated machine. I have embodied the features of my invention in an electrical recording apparatus and, since I find that it is especially efficient in its operation in this connection, I consider this application of importance and I have, therefore, elected to illustrate and describe my invention as applied to such a machine. This electrical recording apparatus is of the same general type as that described and claimed in my co-pending application, Serial No. 603,621, filed June 20, 1911, and is, in fact, an improvement over the ribbon controlling mechanism therein set forth.

In the accompanying drawings Figure 1 is a general side elevational view of a machine embodying my invention; Fig. 2 is a side elevation view thereof, parts being broken away and removed for the purposes of clearness; Fig. 3 is a horizontal sectional view taken approximately on the plane of the line 3—3 of Fig. 1 and looking in the direction indicated by the arrows. The line 2—2 of this figure indicates the plane of Fig. 2; Fig. 4 is a detail, face, elevational view of the ribbon mechanism isolated from the other parts of the machine; Fig. 5 is a side elevational view of the parts shown in Fig. 4; Fig. 6 is a view similar to Fig. 4, parts being omitted, showing the mechanism in another position; Fig. 7 is a further detail view of the ribbon mechanism; and Fig. 8 is a diagrammatic representation of the system in connection with which the machine is employed.

Like reference characters are applied to the same parts throughout the various figures.

I shall first give a brief description of the general construction and operation of the machine and shall then proceed to a detailed account of the ribbon mechanism.

It will be seen that the various parts of the machine are mounted upon a base 10 which, toward one side thereof, is provided with four pillars 11, 11 which support the shelf 12, this shelf in turn being the supporting means for the printing mechanism with which my present invention is particularly concerned. In the device illustrated, part of the printing is done by means of a plurality of electromagnetic printing devices 13, 13 which are arranged upon the base plate 10 in the manner indicated in dotted lines in Fig. 3. Each of these devices comprises an electromagnet, the energization of which results in the upward throw of a type bar 14. In this par-

ticular machine, there are ten of these electromagnetic printing devices and the type bars are provided with numbers from one to ten inclusive. Each of these type bars 14, 14 carries three type of the same number and that part of the bar upon which these type are carried is adapted to be thrown into a guide box 15 which is carried upon a vertical frame piece 16 secured to the secondary shelf 12. A sliding bar 17 is mounted in a bracket 18 secured to this vertical frame piece and this sliding bar is connected with an oscillating armature 19, disposed in proximity to the electromagnets 20 and 21, by means of a lever 22 pivoted at 23 to the base plate 10. The electromagnets 20 and 21, as illustrated in Figs. 1 and 2, are secured on the under side of the base plate and the armature 19 is normally in the same position relative to each of them. The sliding bar 17 carries a small platen 23′, substantially of the same width as that of one of the type on the type bars, and a pair of springs 24 maintain this platen normally in its "middle" position in the guide box. The energization of the magnet 20 brings the movable platen over toward the left side of the guide box (Fig. 2) and the energization of the magnet 21 brings it over toward the other side of the guide box. In this way only one of the three type carried by the type bars is effective at one time and the one which is effective depends upon the position of the platen 23′. By the proper control of the electromagnets 20 and 21 a figure may be printed in a "hundreds" column or in a "units" column, the normal position being in the "tens" column—and a three digit column is the result.

The machine described is used for the purpose of making a record of the entering and leaving times of employees in large industrial establishments and each employee makes his individual registration by the pressing of certain buttons on a so-called "entrance plate" to control the circuits, to energize certain magnets, and to register the number in the manner just described, by energization of certain of the electromagnetic devices 13, 13. Associated with the printing mechanism, which has been described in general terms, are a number of type wheels 25, 25 which are intended to print the time of day and the date, these type wheels being advanced regularly by the use of a master-clock. This advancing mechanism does not concern the present invention and I shall, therefore, refrain from burdening this description by detailed reference thereto. Another printing wheel 26 is provided, this wheel being provided with the notations "in" and "out". Electromagnetic mechanism is provided to shift from one notation to the other, so that an employee may register the fact as to whether he is entering or leaving the premises. Thus, certain type of the type wheels 25 and one or the other of the notations of the type 26 are brought into a certain "printing line", this line being coincident with the printing line of the electromagnetic printing devices 13, 13.

In the case of the printing devices 13, 13, the platen remains in a certain horizontal plane and the type are thrown up against it. In the case of the other printing wheels, the type remain in a certain horizontal plane and the platen is brought down upon it, as will be described presently. It will be understood that the paper passes lengthwise between the platens and the type, that is, it passes from left to right (Fig. 1). The strip of paper is indicated at *a*, and the manner in which it is advanced after each registration will now be described.

The platen for the "in and out" wheel and the time wheels is illustrated at 27. This platen, of course, lies in the vertical plane of the "printing line" and is adapted to be lowered when the impression is to be made. This platen is adapted to occupy that part of the "printing line" not already occupied by the platen arrangement 23′. The platen 27 is carried in a box 28 which is carried upon an oscillating frame 29. The frame 29 is mounted upon a pivot rod 30 held in place in upright frame pieces 31, 31 extending rearwardly from the front vertical frame piece 16. The frame 29 has a tail part 32 which passes under a bridge 33 mounted upon the shelf 12. A rod 34 passes across the sides of this tail part of the frame and is loosely connected therewith, as clearly shown in Fig. 1. Mounted upon the bridge 33 is a pair of electromagnets 35, the cores of which are jointed and formed for the reception of a solenoid armature 36 which is connected with the rod 34 through the medium of a head 37. A coiled spring 38 is disposed between the head and the under side of the bridge so as to hold the armature in its lowered position. Since the tail of the frame is thus held downwardly, the platen 27 is normally held in its raised position, that is, the position shown in Fig. 1.

Mounted between the side plates 31, 31, just to the left of the printing mechanism, (Fig. 1), is a roller 39 which carries a ratchet wheel 40 on its shaft just outside the side plates. This ratchet wheel is arranged to be engaged by a dog 41 carried by the oscillating frame, and the throw of the frame is such as to secure the movement of the dog through a distance slightly more than the length of one of the teeth of the ratchet. The teeth of the ratchet are of such length that the periodic movement of the strip of paper rolling on the roller 39 will be ample to print on the strip until out of the range of the so-called "printing line". The roller

39 has associated therewith a second roller 42 which is mounted in collars set in the side plates upon the tension of coiled springs 43, 43. These springs hold the roller 42 against the roller 39 and the strip of paper passing between them may, therefore, respond positively to the action of the driving roller 39.

I shall now refer to the inking mechanism with which my invention is directly concerned.

The inking ribbon is indicated at *r*. One end of the ribbon is secured to and is rolled upon a spool 44, pivoted at 45 in the upright frame piece 16. The ribbon then passes over suitably mounted idlers, 46, 46, which guide the ribbon between the strip of paper *a* and the type to the other spool 47 pivoted at 48, to the frame piece 16. The spools 44 and 47 are mounted substantially in the same vertical plane with the printing line, and in this way the effective part of the ribbon *r* is always kept in proper place. Each of the spools are retained upon their respective pivot pins by means of a thumb screw 49 which has threaded engagement with the reduced end of the pivot pin, the screw being tightened up against the shoulder thus formed to leave the corresponding spool free to rotate. The mechanism for securing the progression of the ribbon is illustrated in detail in Figs. 4 to 7. The platen box 28, which is operated up and down by means of the electromagnets 35, has, extending upwardly therefrom, a strap 50 which is guided relative to the upright frame 16 by means of a screw 51 passing through an elongated slot 52 therein and into a boss 53 suitably secured to the frame. Near the point where the strap 50 joins the box 28, as clearly shown in Fig. 4, a small lever 54 is pivoted at 55. This lever is provided at the top with a double acting dog 56 centrally pivoted thereto at 57 and having a tail 58, between which and the pivot 55 a small coiled spring 59 is connected. The dog 56 is provided with two pawl teeth 60 and 61 which are adapted for association with ratchets 62 and 63 respectively, secured to the spools 47 and 44 respectively. As will be clear presently, the lever 54 is adapted to occupy two different operative positions. In one of such positions the pawl tooth 60 is in place for cooperation of the ratchet 62 while the other tooth remains inoperative. When the lever 54 is thrown over to its alternative position, the pawl tooth 61 is brought into position for coöperation with the ratchet 63 and the tooth 60 is rendered inoperative. The lever 54 is arranged to be held in either of its positions by means of a special mechanism illustrated in Figs. 4, 5 and 7. This mechanism comprises a plunger 64, with a conical head, which is confined in a small tube 65 against the tension of a spiral spring 66, this tube being secured to the strap 50 in the manner illustrated in Fig. 5. The lever 54 is provided with a pin 67 which extends through a circular slot 68 in the strap 50, so that it may engage either one side or the other of the plunger 64, as illustrated in the drawings. In other words, the lever 54 is limited in its movement by the length of the slot 67, and the plunger arrangement operates to maintain the lever at either limit at this movement with a certain degree of security. The force which, as will be described presently, moves the lever from one side to the other easily overcomes the tension of the coiled spring and the plunger is merely depressed so as to allow the pin 67 to pass. Since the head of the plunger is conical, the ordinary cam movement is secured and the lever is held on either side with equal certainty.

As the strap 50 reciprocates up and down in response to the movement of the frame 29 under the influence of the magnets 35 the active pawl tooth 60 or 61, whichever the case may be, operates to advance the associated ratchet and to draw the ribbon across the printing line in this way. The means for preventing back lash of the active ratchet is an important feature of my invention. This means is clearly illustrated in Figs. 2, 4, 5 and 7 and comprises a key-shaped lever 69 pivoted at 70 to the upright frame piece 16. The cross piece 71 of this lever is disposed between the ratchets 62 and 63, but is of such length that when it is in engagement with one of them it cannot be in engagement with the other. Each end of this cross piece is provided with a toe 72 which is adapted to engage with the teeth of the corresponding ratchet, as illustrated in Fig. 7. A capsule 73 is transversely and symmetrically secured upon the lever 69, and a small quantity of a heavy liquid, like mercury, is confined therein. When the lever is thrown over to one side so as to be placed in operative relation to one of the ratchets, the weight of the mercury will tend to hold the active toe 72 in engagement with such ratchet. When the lever is thrown over to the other side the mercury will pass over and its weight will be similarly effective on the other side to hold the corresponding toe in engagement with the other ratchet. This lever is provided with two lugs 74, 74 between which a pin 75, extending from the lever 54 and passing through a circular slot 76 in the strap 50, is adapted to extend. As shown in Fig. 7, there is sufficient play between these lugs and the pin 75 so that the lever 69 may respond to the movement of the active ratchet in the proper direction. At the same time, the engaging toe 72 prevents any movement of that ratchet in the unwinding direction.

It will now be seen that when the lever 54 is in one position, the lever 69 may have its play on one of the ratchets, and when the lever 54 is thrown over into the other position, the lever 69 is also thrown over into the corresponding position and may have its play on the other ratchet.

Let it be assumed, for the purposes of illustration, that the main part of the ribbon is on the spool 44 and that it is traveling over to the spool 47. Under those circumstances, the dog mechanism is in the condition shown in Fig. 4. The levers 54 and 69 are thrown over to the left and the pawl tooth 60 is in operative relation to the ratchet 62. The corresponding toe 72 is resting against the ratchet 62. As the reciprocations of the strap 50 take place, the pawl tooth 60 operates the ratchet and rotates the associated spool in the direction of the arrow *x*. It will be noted that there is nothing to hinder the responsive rotation of the spool 44, at this point, by the pull on the ribbon. As before stated, the ribbon is fastened at its ends to the respective spools and when it has reached the limit of its travel the pawl tooth 60 on its upward return stroke under the influence of the spring 38,—the stroke when it should advance the ratchet,—cannot move it because the ribbon cannot be drawn any farther. The spring 38 is a strong spring, as heretofore pointed out, and the holding action of the plunger 64 is overcome. Since the tooth 60 is in engagement with the ratchet 62, and since the strap rises, as pointed out, the lever 54 and the dog 56 must buckle, in the manner of a toggle, in the position shown in full lines in Fig. 6. On the next downward movement of the strap 50, due to the energization of the magnets 35, the pawl tooth 60 is released from the ratchet 62 and the small coiled spring 59 operates to throw the dog 56 into the position shown in dotted lines in Fig. 6, that is, the position in which the pawl tooth 61 makes operative engagement with the ratchet 63. At the same time, the pin 75 throws the lever 69 over into the right-hand position and the corresponding toe 72 makes operative engagement with the ratchet 63. The succeeding reciprocations of the strap 50 are then effectively applied to the ratchet 63 and the ribbon is then drawn across the printing line in the opposite direction. This action continues until the other limit of the travel of the ribbon has been reached, when the cycle of events, just pointed out, is repeated.

A very brief description of the electrical system is given, in order that the operation of the printing mechanism with which the ribbon controlling arrangement is operatively associated, may be understood: Referring to Fig. 8, the electromagnetic printing devices 13 are illustrated by the circles with the notations from zero to nine inclusive. The "entrance plate" is indicated by the character *e* and includes a system of switches for closing the circuit through any of the electromagnetic printing devices and the battery *b*. It also comprises "in" and "out" buttons and means for indicating the position of the "in and out" printing wheel 26. The circle *p* indicates an electromagnet, the circuit of which is controlled by a master-clock *c*, which operates to advance the printing wheels 25, 25. It will be noted that the switches on the entrance plate are arranged in three columns, the "hundreds" column, the "tens" column, and the "units" column. When it is desired to print a number in the hundreds column the electromagnet 20 is energized, being properly connected in circuit, and when it is desired to print a number in the units column the electromagnet 21 is energized, being properly connected in the units circuit. In either event the platen is shifted from its normal position into one of its abnormal positions, as has been described. The magnets 35 are connected up in the unit circuit so that when the unit number is printed they will be energized simultaneously and the platen 27 will come down to print the "in" or "out" indication and the time indication. The "in" and "out" buttons control the circuit of electromagnets *i*, *i'* and *o*, *o'* which control armatures to shift the printing wheel 26 and to shift the indicating wheel on the "entrance plate".

I claim as new and desire to secure by Letters Patent:

1. In a printing machine, a pair of ribbon rolls each carrying a ratchet, a reciprocating member disposed between said rolls, a lever pivoted on said reciprocating member, a dog pivoted on said lever, said lever being arranged to occupy two operative positions, one with the dog in operative relation to one ratchet and the other with the dog in operative relation to the other ratchet, and a pivoted detent member arranged to be thrown from one to the other of two operative positions, said detent being held in either of its operative positions by a weight arranged to be effective on either side of the center of gravity of said detent member.

2. In a printing machine, a pair of ribbon rolls each having a ratchet, a reciprocating member disposed between said rolls, a lever pivoted on said reciprocating member, a dog pivoted on said lever, said dog being adapted to occupy two operative positions, one in operative relation to one ratchet and the other in operative relation to the other ratchet, a pivoted detent member arranged to be thrown from one to the other of two

operative positions, and a weight for holding said detent member in operative engagement with either of said ratchets.

3. In a printing machine, a pair of ribbon rolls each having a ratchet, a reciprocating member disposed between said rolls, a dog lever pivoted on said reciprocating member, said dog lever being adapted to occupy two operative positions, one in operative relation to each of said rolls, a detent member arranged to be held in engagement with either of said ratchets by a weight, and mechanical connection between said lever and said detent member, there being play in said mechanical connection so as to admit of the responsive movement of said detent member when said ratchet is moved by the dog coöperating with the teeth thereof.

4. In a printing machine, a ribbon roll carrying a ratchet, a reciprocating member, a dog lever pivoted on said reciprocating member for operative connection with said ratchet, a detent member held in engagement with said ratchet by a weight, and mechanical connection between said dog lever and said detent member.

5. In a printing machine, a ribbon roll carrying a ratchet, a reciprocating member, a dog lever pivoted on said reciprocating member for operative connection with said ratchet, a detent member held in engagement with said ratchet by weighted mechanism, and mechanical connection between said dog lever and said detent member, said mechanical connection having a certain play so that said detent member may respond to the movement of the ratchet under the influence of the dog.

6. In combination, an oscillating frame, a pair of ribbon rolls, a ratchet on each ribbon roll, an operating member extending from said frame between said ribbon rolls, a dog carried by said operating member for cooperation with either of said ratchets, and a detent member held in engagement with either of said ratchets by weighted mechanism, and mechanical connection between said dog and said detent whereby said detent may be carried into engagement with the ratchet with which said dog is associated.

7. In combination, an oscillating frame, a pair of ribbon rolls, a ratchet on each ribbon roll, an operating member extending from said frame between said ribbon rolls, a dog pivoted upon said operating member, a detent mounted upon a stationary pivot and arranged for engagement with either of said ratchets, a capsule carried by said detent, and mercury in said capsule, the weight thus formed being adapted to be disposed on either side of the center of gravity of said detent to be held in engagement with either of said ratchets by weighted mechanism.

In witness whereof, I hereunto subscribe my name this 29th day of May, A. D., 1911.

ALFRED L. SOHM.

Witnesses:

ALBERT G. MCCALEB,

ARTHUR H. BOETTCHER.