AMENDED

AUSTRALIAN PATENT OFFICE Reg 76 (3)

SPRUSON & FERGUSON

COMMONWEALTH OF AUSTRALIA
PATENTS ACT 1952

627504

CONVENTION APPLICATION FOR A STANDARD PATENT

We **FLEXXAIRE MANUFACTURING INC.**, of 15803 - 121A Avenue, Edmonton, Alberta, T5V 1B1, Canada, hereby apply for the grant of a standard patent for an invention entitled:

"VARIABLE PITCH FAN"

which is described in the accompanying complete specification.

DETAILS OF BASIC APPLICATIONS

Number(s) of Basic Application(s):-
579,151

Name(s) of Convention Country(ies) in which Basic Application(s) was/were filed:-
Canada

Date(s) of Basic application(s):-
3 October 1988

The address for service is:-

Spruson & Ferguson
Patent Attorneys
Level 33 St Martins Tower
31 Market Street
Sydney New South Wales Australia

DATED this ELEVENTH day of MAY 1990

FLEXXAIRE MANUFACTURING INC.,

By:

Registered Patent Attorney.

TO: THE COMMISSIONER OF PATENTS
AUSTRALIA

gr/2186F

SPRUSON & FERGUSON

COMMONWEALTH OF AUSTRALIA

PATENTS ACT 1952

DECLARATION IN SUPPORT OF A CONVENTION APPLICATION FOR A PATENT

In support of the convention application made for a patent for an invention entitled:

Variable Pitch Fan

I, ...Frederick.H.G..Drury.....
[full name of declarant(s)]

of 53025 Range Road 265, Spruce Grove, Alberta, T7X 3G6
[full address of declarant(s) - not post office box]

.....

.....

do solemnly and sincerely declare as follows:

1. I am authorised by Flexxaire Manufacturing Inc., the applicant for the patent to make this declaration on its behalf.

2. The basic application as defined by Section 141 of the Act was made in the Canada on 3 October 1988 by Clarence Isert.

3. Clarence Isert, of Box 120, Dewberry, Alberta, Canada, T0B 1G0

.....,
is the actual inventor of the invention and the facts upon which the applicant is entitled to make the application are as follows:-

Overland Manufacturing Limited is the assignee of the actual inventor and the applicant is the assignee of Overland Manufacturing Limited.

4. The basic application referred to in paragraph 2 of this Declaration was the first application made in a Convention country in respect of the invention(s) the subject of the application.

DECLARED at Edmonton, this 22nd day of January 1992

.....
Signature of Declarant(s)

TO: THE COMMISSIONER OF PATENTS
AUSTRALIA

TMS/6453U

(12) PATENT ABRIDGMENT (11) Document No. AU-B-42522/89
(19) AUSTRALIAN PATENT OFFICE (10) Acceptance No. 627504

(54) Title
VARIABLE PITCH FAN

International Patent Classification(s)
(51)[4] **F04D 029/36** **F04D 029/06**

(21) Application No. : **42522/89** (22) Application Date : **03.10.89**

(30) Priority Data

(31) Number (32) Date (33) Country
579151 **03.10.88** **CA CANADA**

(43) Publication Date : **05.04.90**

(44) Publication Date of Accepted Application : **27.08.92**

(71) Applicant(s)
FLEXXAIRE MANUFACTURING INC.

(72) Inventor(s)
CLARENCE ISERT

(74) Attorney or Agent
SPRUSON & FERGUSON , GPO Box 3898, SYDNEY NSW 2001

(56) Prior Art Documents
US 2812027

(57) Claim

1. A fan assembly incorporating a plurality of variable pitch blades adjustable during operation of said assembly to alter volume and direction of air flow induced by said assembly, comprising:

a main, non-rotatable shaft;

a secondary shaft coaxially located within said main shaft for limited axial fore and aft movement within said main shaft;

a pulley hub and pulley mounted for rotation on said main shaft;

a blade hub secured to said pulley hub for rotation therewith;

a plurality of fan blades each having a blade shaft mounted for rotation in said blade hub;

each blade shaft having an interior end extending into the blade hub, and having a crank arm secured to the interior end;

means for axially moving the secondary shaft within the main shaft;

interconnect means rotatably mounted on the secondary shaft, the interconnect means interconnecting with the blade shafts for effecting rotation of said fan blades;

the crank arm of each blade shaft being mounted for rotation within the interconnect means;

each fan blade being straight, having a neutral airfoil shape in cross-section extending along the fan blade and having a rounded leading edge;

one or both of the pulley hub and blade hub defining an annular reservoir for receiving lubricant upon rotation of the fan assembly;

.../2

the pulley hub being mounted on a first bearing assembly on the main shaft;

the interconnect means being mounted on a secondary bearing assembly on the secondary shaft;

a stationary feed pipe fixed to the secondary shaft and having a pick-up end disposed within the reservoir;

the secondary shaft including a lubricant gallery terminating at openings in fluid connection with the first and secondary bearing assemblies;

the lubricant gallery directly interconnecting the feed pipe and the openings; and

in which the assembly has a first end and a second end, the blade hub being mounted on the first end and the secondary shaft extending from one end to the other and further including a mounting bracket mounted at the second end of the fan assembly, the means for axially moving the secondary shaft being mounted on the main shaft between the mounting bracket and the pulley hub.

S & F Ref: 108951

FORM 1 627504

COMMONWEALTH OF AUSTRALIA

PATENTS ACT 1952

COMPLETE SPECIFICATION

(ORIGINAL)

FOR OFFICE USE:

Class Int Class

Complete Specification Lodged:
Accepted:
Published:

Priority:

Related Art:

Name and Address of Applicant: FLEXXAIRE MANUFACTURING INC.
~~Overland Manufacturing Ltd~~
15803 - 121A Avenue
Edmonton Alberta T5V 1B1
CANADA



Address for Service: Spruson & Ferguson, Patent Attorneys
Level 33 St Martins Tower, 31 Market Street
Sydney, New South Wales, 2000, Australia

Complete Specification for the invention entitled:

Variable Pitch Fan

The following statement is a full description of this invention, including the best method of performing it known to me/us

5845/5

ABSTRACT OF THE DISCLOSURE

A fan assembly has variable pitch blades adjustable from outside the assembly while the fan is operating so as to alter the volume and direction of the induced airflow. The fan blades have an airfoil configuration such that air is moved by the fan in either direction with equal efficiency. A novel lubricating system is disclosed.

VARIABLE PITCH FAN

FIELD OF THE INVENTION

This invention relates to fans and in particular to a multi-bladed propeller type fan adjustable to reverse the flow of air or other fluids or gases in which the fan operates.

BACKGROUND OF THE INVENTION

There are numerous fan installations in industry where the fan is required to move air in one direction and then, after a period of time, to move the air in the opposite direction. It is also desirable that a fan be adjusted to move a smaller amount of air without changing the speed of the fan. For example, on the engine of a tracked type of tractor such as a bulldozer or the like it is desirable to have the fan in a neutral or zero pitch position when the engine of the vehicle is being warmed up. When the equipment is being used in the summer, however, it is preferred to have air blown through the radiator and away from the operator but just the reverse is desired in the colder winter months when it is preferred to have the warm air of the radiator blown towards the operator.

A further example is when such equipment is used in dusty and dirty conditions resulting in radiators being partially plugged or blocked with debris from the environment. It is desirable at such times that the fan be reversed in order to blow out the dust, dirt or other materials from the interstices of the radiator core.

Systems presently available require that the engine fan be stopped so that the blades can be manually adjusted one at a time to set the required pitch, by the operator.

Another example is in the mining industry where, in a mine shaft, fans are used to move air down a shaft and then, after a time, the motors are reversed and the air is exhausted from the mine. These are large diameter fans and require large motors of substantial horsepower. The stopping, starting and reversing of these motors is time consuming and expensive.

In large agricultural operations it is required to keep the air in buildings at a constant temperature during changing outside air temperature levels. A variable speed reversing fan which is temperature controlled is expensive when compared to a constant speed fan with variable pitch blades.

There are fans on the market which are reversible but they do not move air in both directions with equal efficiency. There are also some designs which disclose adjustable blades but they are limited in the number of blades and have inherent friction and lubrication problems associated with the inner components of the fan assemblies. Such fans have never come into production due to these problems. There is also the problem of the physical size associated with the available adjustable blade fans which prohibits their use in many vehicular applications.

SUMMARY OF THE INVENTION

It is the object of the present invention to overcome or substantially ameliorate the above disadvantages.

There is disclosed herein a fan assembly incorporating a plurality of variable pitch blades adjustable during operation of said assembly to alter volume and direction of air flow induced by said assembly, comprising:

a main, non-rotatable shaft;

a secondary shaft coaxially located within said main shaft for limited axial fore and aft movement within said main shaft;

a pulley hub and pulley mounted for rotation on said main shaft;

a blade hub secured to said pulley hub for rotation therewith;

a plurality of fan blades each having a blade shaft mounted for rotation in said blade hub;

AUSTRALIAN PATENT OFFICE

each blade shaft having an interior end extending into the blade hub, and having a crank arm secured to the interior end;

means for axially moving the secondary shaft within the main shaft;

interconnect means rotatably mounted on the secondary shaft, the interconnect means interconnecting with the blade shafts for effecting rotation of said fan blades;

the crank arm of each blade shaft being mounted for rotation within the interconnect means;

each fan blade being straight, having a neutral airfoil shape in cross-section extending along the fan blade and having a rounded leading edge;

one or both of the pulley hub and blade hub defining an annular reservoir for receiving lubricant upon rotation of the fan assembly;

the pulley hub being mounted on a first bearing assembly on the main shaft;

the interconnect means being mounted on a secondary bearing assembly on the secondary shaft;

a stationary feed pipe fixed to the secondary shaft and having a pick-up end disposed within the reservoir;

the secondary shaft including a lubricant gallery terminating at openings in fluid connection with the first and secondary bearing assemblies;

the lubricant gallery directly interconnecting the feed pipe and the openings; and

in which the assembly has a first end and a second end, the blade hub being mounted on the first end and the secondary shaft extending from one end to the other and further including a mounting bracket mounted at the second end of the fan assembly, the means for axially moving the secondary shaft being mounted on the main shaft between the mounting bracket and the pulley hub.

BRIEF DESCRIPTION OF THE DRAWINGS

A preferred form of the present invention will now be described by way of example with reference to the accompanying drawings, wherein:

Fig. 1 is a frontal view of a six bladed version of the present invention;

Fig. 2 is a side elevation in cross-section of the fan assembly according to the present invention showing the relative position of the

AUSTRALIAN PATENT OFFICE

internal parts of the assembly with the blades of the assembly in a forward pitch position;

Fig. 3 is a view similar to Fig. 2 but shows the relative position of the internal parts of the assembly with the blades in a reverse pitch position;

Fig. 4 is a schematic view, partly in cross-section, illustrating the lubrication system of the invention; and

Fig. 5 is a cross-section of a typical neutral airfoil shape of the blade of the fan assembly.

DETAILED DESCRIPTION OF THE PREFERRED EMBODIMENT

The fan assembly is driven by any suitable means such

AUSTRALIAN PATENT OFFICE

as an electric motor, gasoline or diesel engine, lay shaft or the like, and such drive means to the fan pulley is not illustrated. Moreover, it is to be appreciated that different numbers of blades may be used in the configuration to be described and that the airfoil shape of the blades may vary.

Referring to figures 1 and 2, the fan assembly indicated generally at 10 externally discloses a plurality of blades 12 mounted in an assembly housing 14 rotatably mounted on a main shaft 16. Housing 14 comprises a blade hub 18 having a front cover 20 and sealed thereto by means of an oil ring seal 22. A pulley hub 24 and pulley 26 are secured to the blade hub 18 by means of a series of circumferentially positioned bolts 28.

As clearly seen in figures 2 and 3, the pulley hub is rotatably mounted to the main shaft 16 by means of a pair of spaced bearing races 30 which include a suitable oil seal 32 adjacent to one race and the other race securing the pulley hub 24 in place by means of a locknut 34 and washer 36. As illustrated, pulley hub 24 includes an inner peripheral shoulder 38 of reduced diameter which lies between the two bearing races 30 and is thereby axially located on the main shaft 16.

Pulley 26 is shown as a separate component from pulley hub 24 and this is the preferred arrangement although a unit structure of these two components is feasible.

The means for reversing the pitch of the fan blades 12 includes a secondary shaft 40 which is interconnected to blade reversing means illustrated generally at 42 and located within the cavity 44 of the fan assembly.

Secondary shaft 40, like main shaft 16, is a non-rotating element of the assembly and is concentrically located within the main shaft 16 and mounted for reciprocating, axial movement with respect to the main shaft from the back position shown on figure 2 to the forward position shown on figure 3. Shaft 40 is slidably positioned in shaft 16 by way of suitable bushings 46 and that portion of shaft 40 that lies outside the

rotatable assembly 10 is provided with a slot or like opening 48 which receives an actuating pin or crank 50 mounted on a shaft 52 which in turn is located on a bracket or mounting plate 54 which is used to secure the assembly to a desired location on the vehicle.

It will be appreciated that the means for actuating the crank or pin 50 to reciprocate the secondary shaft 40 within the main shaft 16 can be a manual operation, or a hydraulic or electric operation possibly governed by temperature sensing means.

The end of the secondary shaft 40 remote from the crank 50 has a portion 56 of reduced diameter on which a pair of bearing races 58 are located and which support a spider 60 mounted for rotation thereon.

As shown in figures 2 and 3, each fan blade 12 has a shaft 62 the upper end of which 64 is secured to the fan blade while the lower end of the shaft 62 is located in a cylindrical aperture 66 in the hub 18 by means of a bushing 68. An oil seal 69 mounts the outer end of the end of the shaft 62 in the bushing 68 and the inner end of the shaft 62 is supported by a bearing 70 located in a raceway 72 at the inner end of aperture 66.

A bellcrank 74 interconnects the inner end of each blade shaft 62 to the spider 60 and this is accomplished by means of an offset crank pin 76 mounted in an arm 78 by means of a tapered locking pin 80 secured in place by a suitable nut and washer combination 82 and 84 which secure the crank arm 78 to the inner end of the blade shaft 62.

The crank pin 76 includes an inner end 86 which is located in the spider 60 by means of spherical or roller bearings 88, one for each crank pin 76.

As shown by the cross-section of the blade 12, its configuration provides an equal surface to the air whether it is oriented for forward or rearward attack against the air as shown between figures 2 and 3.

Figure 2 shows the crank pin 50 being so located in the slot 48 of secondary shaft 40 that the shaft 40 is located at its innermost position in the main shaft 16 and a peripheral flange 41 on the shaft 40 engages the terminal end 17 of main shaft 16 to limit the innermost movement of one shaft within the other.

Actuating the crank pin 50 to vary the pitch of the fan blades results in the change of location of the elements shown in figure 3. It will be observed that the secondary shaft 40 has moved to the left in figure 3 by virtue of the crank pin 50 operating in the slot 48 of the shaft and, in so doing, the spider 60, operating on the crank pins 76 of the bellcranks 74 rotate the blade shafts 62 and therefore the fan blades 12 to their illustrated position, a reverse pitch compared to that of figure 2.

The secondary shaft 40 also incorporates the lubrication system of the present invention.

It will be noted from figures 2 and 3 that an oil ring seal 23 is located between the mating surfaces of the pulley hub 24 and blade hub 18 as well as between the cover 20 and the blade hub 18. These oil ring seals, together with the oil seal 32 provide a sealed cavity 44 in which oil can be distributed and circulated. To this end, secondary shaft 40 includes a plurality of oil galleries 90 adapted to direct oil to the bushings and bearings of the assembly. The galleries 90 are interconnected to the central gallery 92 which in turn is interconnected to a feed pipe 94 and is in communication therewith through a short gallery 96. As seen in figure 4 as well as in figures 2 and 3, the lower end of the feed pipe has a pickup end 98 which sits in a trough 100 that provides a reservoir for lubricating oil, the level thereof shown being that when the assembly is running.

When the fan assembly is being rotated, centrifugal force throws the lubricating oil into the trough 100 and the pickup end 98 of the feed pipe 94 receives the oil under the pressure induced by the rotation of the assembly, that pressure

working through the galleries 96, 92 and 90 to lubricate the bearing races and bushings between the stationary and rotatable parts of the assembly. The lubricant works through the bearings and splashes onto the remainder of the moving parts before being again directed to the reservoir portion of the cavity.

While the present invention has been described in connection with a specific embodiment thereof and in a specific use, various modifications of the invention will occur to those skilled in the art without departing from the spirit and scope of the invention as set forth in the attached claims.

The terms and expressions which have been employed in this specification are used as terms of description and not of limitation and there is no intention in the use of such terms and expressions to exclude any equivalents of the features shown and described or portions thereof. It is recognised that various modifications are possible within the scope of the invention as claimed.

The claims defining the invention are as follows:

1. A fan assembly incorporating a plurality of variable pitch blades adjustable during operation of said assembly to alter volume and direction of air flow induced by said assembly, comprising:

a main, non-rotatable shaft;

a secondary shaft coaxially located within said main shaft for limited axial fore and aft movement within said main shaft;

a pulley hub and pulley mounted for rotation on said main shaft;

a blade hub secured to said pulley hub for rotation therewith;

a plurality of fan blades each having a blade shaft mounted for rotation in said blade hub;

each blade shaft having an interior end extending into the blade hub, and having a crank arm secured to the interior end;

means for axially moving the secondary shaft within the main shaft;

interconnect means rotatably mounted on the secondary shaft, the interconnect means interconnecting with the blade shafts for effecting rotation of said fan blades;

the crank arm of each blade shaft being mounted for rotation within the interconnect means;

each fan blade being straight, having a neutral airfoil shape in cross-section extending along the fan blade and having a rounded leading edge;

one or both of the pulley hub and blade hub defining an annular reservoir for receiving lubricant upon rotation of the fan assembly;

the pulley hub being mounted on a first bearing assembly on the main shaft;

the interconnect means being mounted on a secondary bearing assembly on the secondary shaft;

a stationary feed pipe fixed to the secondary shaft and having a pick-up end disposed within the reservoir;

the secondary shaft including a lubricant gallery terminating at openings in fluid connection with the first and secondary bearing assemblies;

the lubricant gallery directly interconnecting the feed pipe and the openings; and

AUSTRALIAN PATENT OFFICE

in which the assembly has a first end and a second end, the blade hub being mounted on the first end and the secondary shaft extending from one end to the other and further including a mounting bracket mounted at the second end of the fan assembly, the means for axially moving the secondary shaft being mounted on the main shaft between the mounting bracket and the pulley hub.

2. The fan assembly of claim 1 in which the feed pipe is connected to the lubricant gallery approximately midway between the first and secondary bearing assemblies.

3. A fan assembly substantially as hereinbefore described with reference to the accompanying drawings.

DATED this NINETEENTH day of MAY 1992

Flexxaire Mfg. Ltd

Patent Attorneys for the Applicant
SPRUSON & FERGUSON

AUSTRALIAN PATENT OFFICE
CC

TMS/761

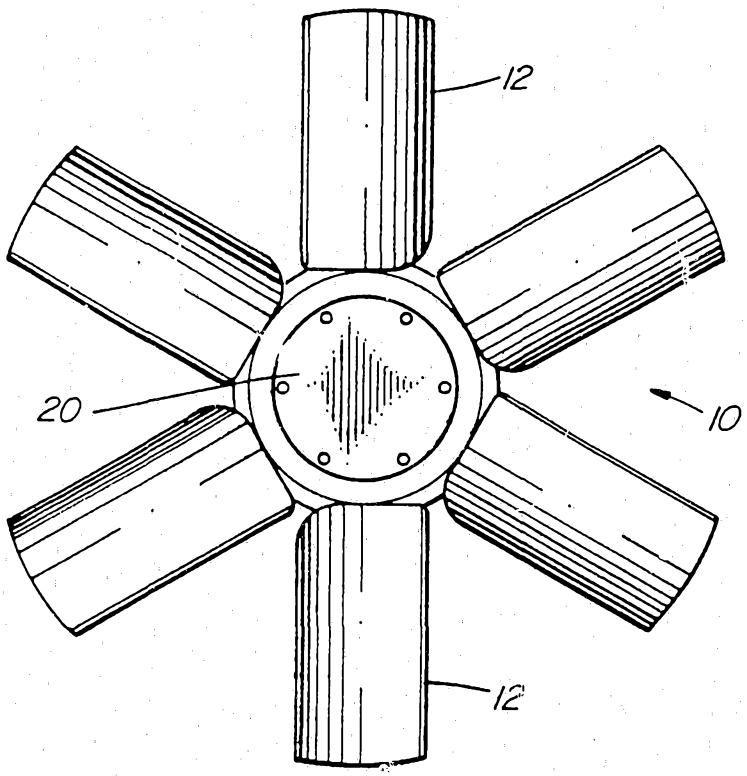

FIG. 1

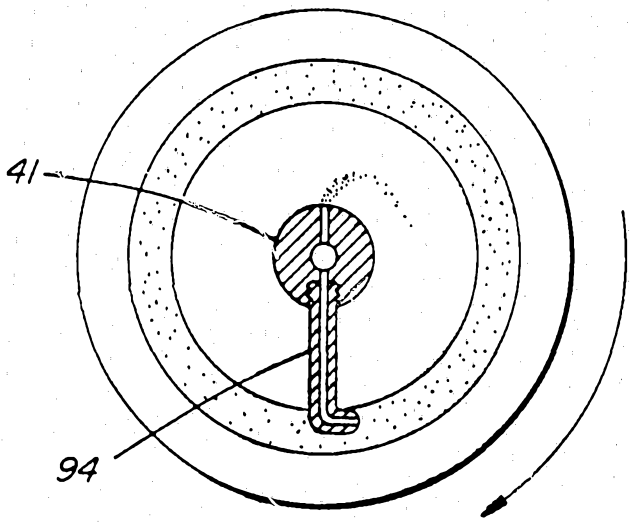

FIG. 4

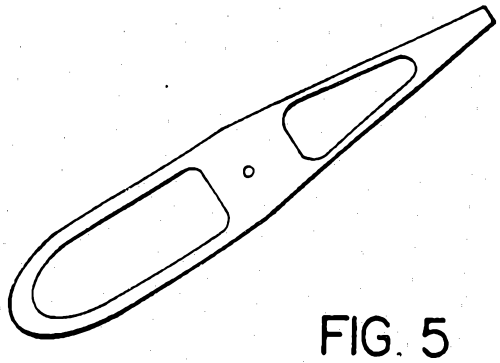

FIG. 5

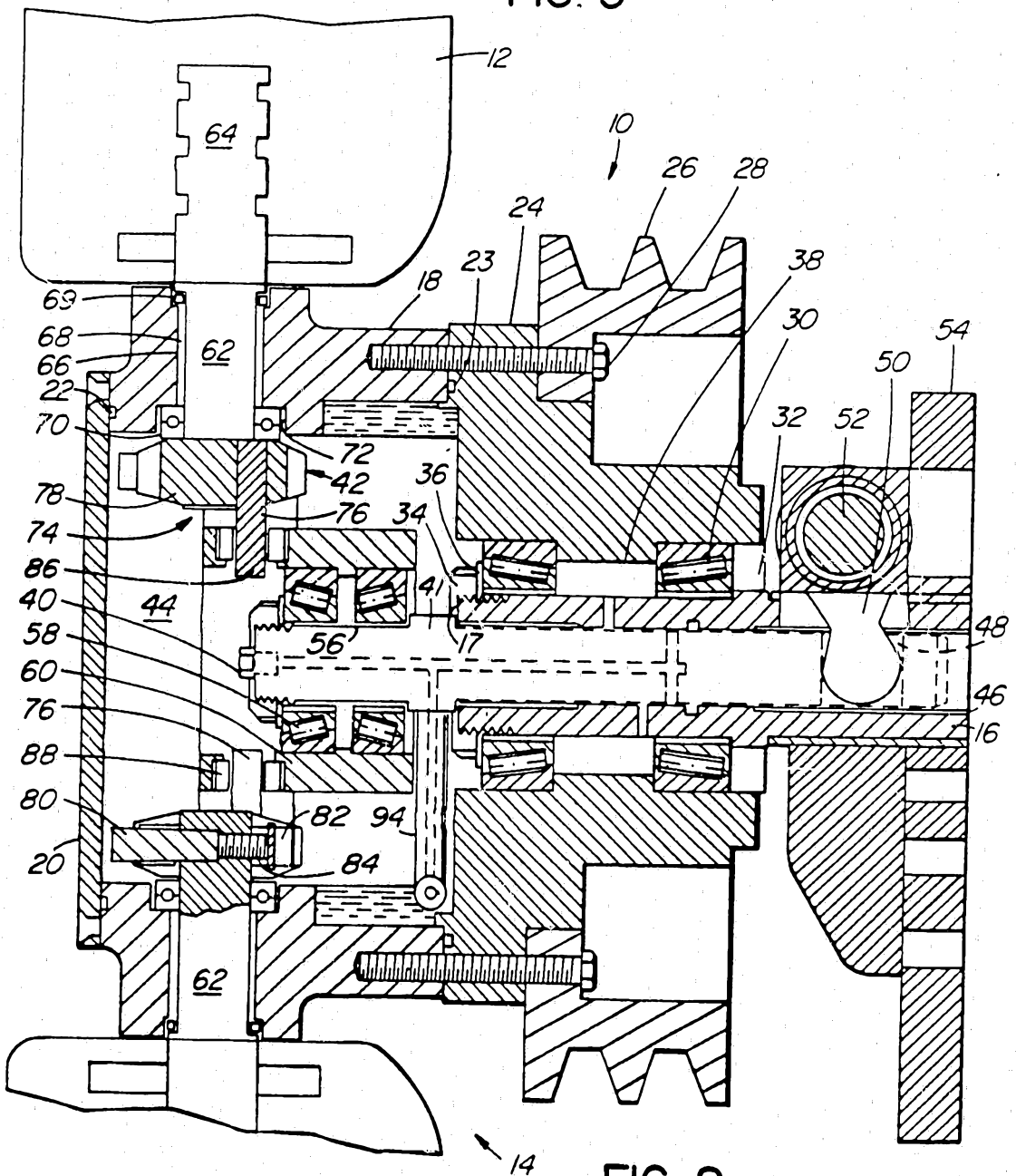
12
64
10
26
28
24
23
38
18
69
30
54
68
62
50
66
22
32
52
70
72
42
36
78
76
34
74
86
41
40
44
48
58
56'
17
60
46
76
16
88
80
82
94
20
84
62
14

FIG. 2

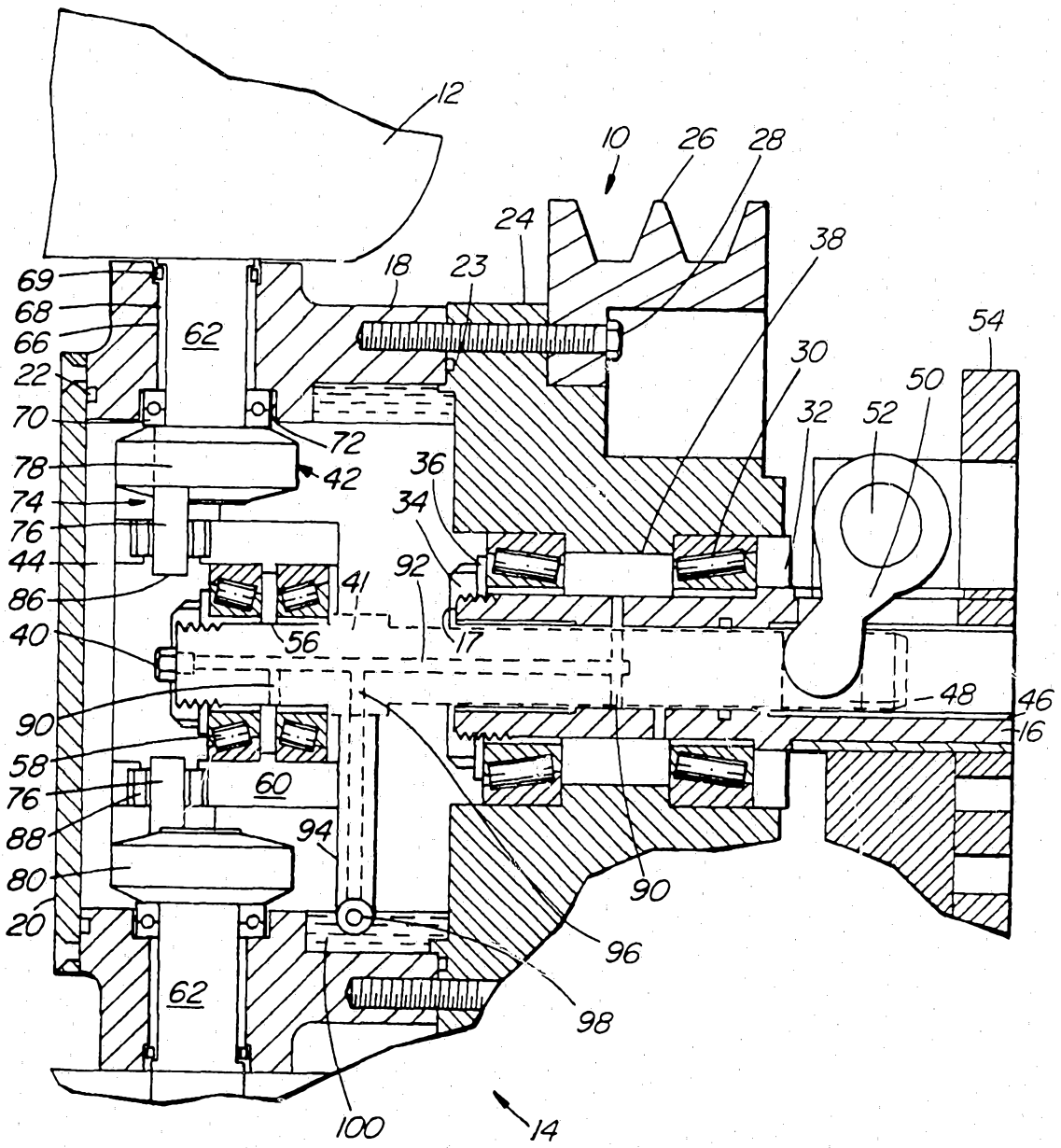
12
10
26
28
24
38
18
23
69
68
66
62
22
70
72
54
30
50
32
52
78
42
36
74
34
76
44
41
92
86
56
17
40
48
46
16
90
58
60
76
88
94
80
90
20
96
62
98
100
14

FIG. 3