ORIGINAL

A CONNECTING STRUCTURE BETWEEN THE SLAG-DRIP TUBE AND THE PRIMARY CHAMBER

Abstract of the Invention

A connecting structure between a slag-drip tube and a primary chamber contains a wallboard of the primary chamber, a slag-drip tube and the nickelclad, the slag-drip tube is set inside the opening in the wallboard of the primary chamber, and there is an air-distributor at the furnace bottom connecting to the top of the slag-drip tube, and a slag cooler connecting to the bottom of the slag-drip tube, a nickelclad surrounds the slag-drip tube. The vertical section of the nickelclad is in the shape of arcuate. The slag-drip tube is soldered on the upper end of the nickelclad, and the wallboard of the primary chamber is soldered on the other end. The nickelclad can produce some deformation for absorbing the differential expansion between the slag-drip tube and the wallboard of the primary chamber. There is a shield covering the slag-drip tube on the upper end of the nickelclad. And the shield covers the nickelclad in order to avoid damage to the nickelclad due to the slag leakage from the air distribution plate. The present invention can absorb the differential expansion between the slag-drip tube and the wallboard of the primary chamber, it might prevent damages of the slag-drip tube.

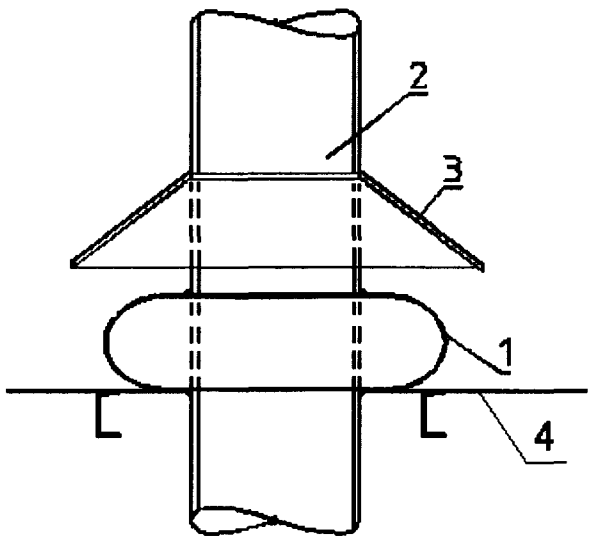

We Claim:

1. A connecting structure between the slag-drip tube and the primary chamber, wherein, said connecting structure between the slag-drip tube and the primary chamber contains a wallboard of the primary chamber (4), a slag-drip tube (2) and a nickelclad (1),

   there is an opening in said wallboard of the primary chamber (4);

   said slag-drip tube (2) is set inside the opening in the wallboard of the primary chamber (4); an air-distributor at the furnace bottom connects to the top of the slag-drip tube (2), and a slag cooler connects to the bottom of the slag-drip tube (2);

   the vertical section of said nickelclad (1) is in the shape of arcuate; said slag-drip tube is soldered on the upper end of the nickelclad (1), and the wallboard of the primary chamber (4) is soldered on the other end.

2. A connecting structure between the slag-drip tube and the primary chamber of claim 1, wherein said connecting structure between the slag-drip tube and the primary chamber is that the vertical section of the nickelclad (1) is in the shape of arcuate or letter U or letter V.

3. A connecting structure between the slag-drip tube and the primary chamber of claim 1, wherein the size of said opening in the wallboard of the primary chamber (4) is matched with the external diameter of the slag-drip tube (2).

4. A connecting structure between the slag-drip tube and the primary chamber of claim 1, wherein said wallboard of the primary chamber (4) is settled horizontally.

5. A connecting structure between the slag-drip tube and the primary chamber of claim 1, wherein, said wallboard of the primary chamber (4) is settled at a slant with a inclination angle from 0°to 45°.

6. A connecting structure between the slag-drip tube and the primary chamber of claim 1, wherein said connecting structure also comprises a shield covering (3), and the shield covering (3) covers the slag-drip tube (2) on the upper end of the nickelclad (1).

7. A connecting structure between the slag-drip tube and the primary chamber of claim 1, wherein said nickelclad (1) surrounds the slag-drip tube (2).

Dated this the 16th Day of January, 2012

MANISHA SINGH NAIR
Agent for the Applicant [IN/PA-740]
LEX ORBIS IP PRACTICE

Shanghai Boiler Works, Ltd. ORIGINAL 439 DELNP 12
Total No. of Sheets: 02
Sheet No. 1 of 02

16 JAN 2012

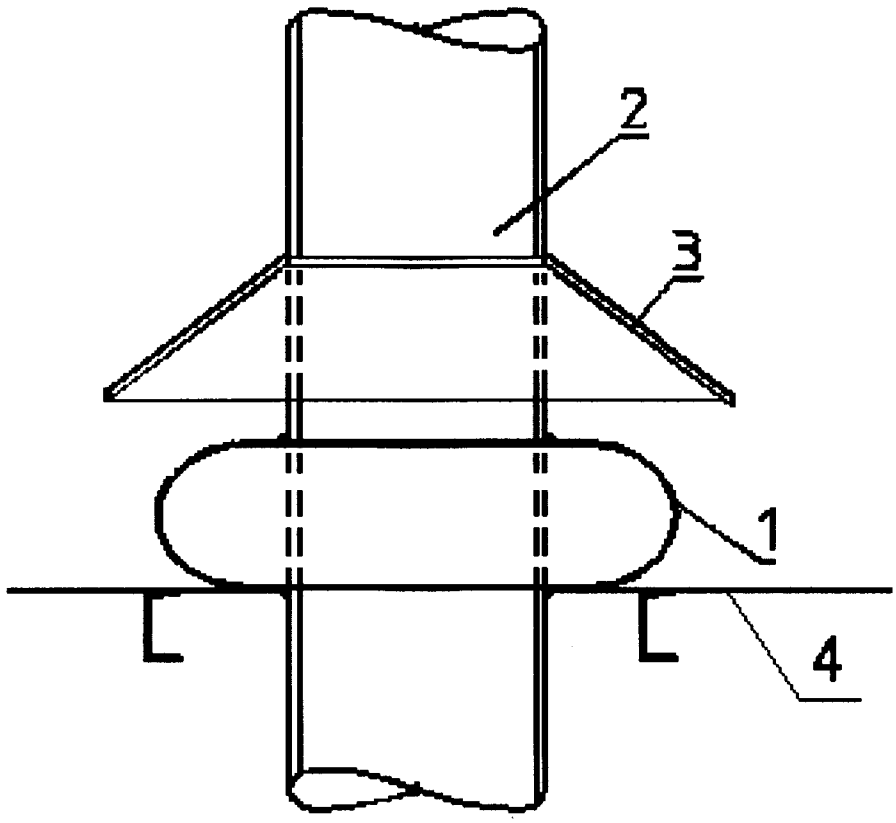

Figure 1

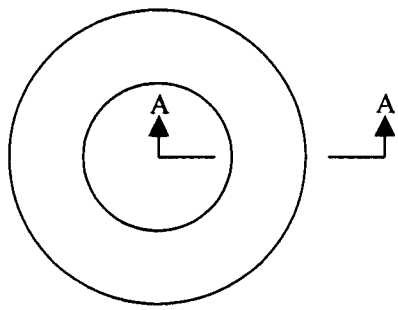

Figure 2

MANISHA SINGH NAIR
Agent for the Applicant [IN/PA-740]
LEX ORBIS IP PRACTICE

ORIGINAL

439/DELNP/12

Shanghai Boiler Works, Ltd.

Total No. of Sheets: 02
Sheet No. 2 of 02

16 JAN 2012

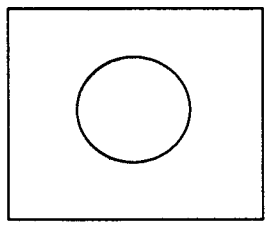

Figure 3

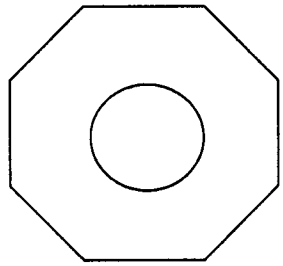

Figure 4

MANISHA SINGH NAIR
Agent for the Applicant [IN/PA-740]
LEX ORBIS IP PRACTICE

Field of the Invention

The present invention relates to a connecting structure between the slag-drip tube and the primary chamber, and more particularly, it is applicable to the slag cooling system in circulating fluidized bed boiler (CFB).

Background of the Invention

The slag-drip tube is an important part of the slag cooling system in the circulating fluidized bed (CFB) for slag conveying. The top of the slag-drip tube locates in the furnace which is on the air-distributor at the furnace bottom, and the top of the slag-drip tube is soldered with the air-distributor at the furnace bottom. The slag-drip tube passes through the primary chamber, and connects to the slag cooler, and both of them are soldered together at the slag-drip inlet of the slag cooler. Due to the different temperature between the slag in the slag-drip tube and the primary air in the primary chamber, the coefficients of expansion are different, and yielding differential expansion. If the differential expansion couldn't be absorbed, the slag-drip tube might be damaged.

Disclosure of the Invention

This invention aims to provide a connecting structure between the slag-drip tube and the primary chamber, which can absorb the differential expansion between the slag-drip tube and the wallboard of the primary chamber, and it might prevent damages of the slag-drip tube.

In order to achieve the above-mentioned purpose, the technical solution of the present invention is to provide a connecting structure between the slag-drip tube and the primary chamber, containing the wallboard of the primary chamber,

the slag-drip tube and the nickelclad.

There is an opening in the above-mentioned wallboard of the primary chamber, and the size of the opening in the wallboard of the primary chamber is matched with the external diameter of the slag-drip tube. The wallboard of the primary chamber can be settled horizontally or at a slant with a inclination angle from 0°to 45°.

The above-mentioned slag-drip tube is set inside the opening in the wallboard of the primary chamber, and there is an air-distributor at the furnace bottom connecting to the top of the slag-drip tube, and a slag cooler connects to the bottom of the slag-drip tube.

The above-mentioned nickelclad surrounds the slag-drip tube. The vertical section of the nickelclad is in the shape of arcuate or letter U or letter V.

The slag-drip tube is soldered on the upper end of the above-mentioned nickelclad, and the wallboard of the primary chamber is soldered on the lower end. The nickelclad can produce some deformation for absorbing the differential expansion between the slag-drip tube and the wallboard of the primary chamber.

Moreover□the above-mentioned connecting structure also comprises a shield covering the slag-drip tube on the upper end of the nickelclad. And the shield covers the nickelclad in order to avoid damage to the nickelclad due to the slag leakage from the air distribution plate.

The present invention can absorb the differential expansion between the slag-drip tube and the wallboard of the primary chamber, and prevent damages of the slag-drip tube.

BRIEF DESCRIPTION OF THE DRAWINGS

Figure 1 is a perspective view of the connecting structure between the slag-drip tube and the primary chamber.

DETAILED DESCRIPTION OF THE EMBODIMENTS

The invention will be disclosed in detail with reference to the preferred

embodiments according to figure 1□

As illustrated in figure1, it is a perspective view of the connecting structure between the slag-drip tube and the primary chamber. The connecting structure contains a wallboard of the primary chamber 4, a slag-drip tube 2 and a nickelclad 1.

There is an opening in the above-mentioned wallboard of the primary chamber 4, and the size of the opening in the wallboard of the primary chamber is matched with the external diameter of the slag-drip tube 2. The wallboard of the primary chamber 4 can be settled horizontally or at a slant with a inclination angle from 0° to 45°.

The above-mentioned slag-drip tube 2 is set inside the opening in the wallboard of the primary chamber 4, there is an air-distributor at the furnace bottom connecting to the top of the slag-drip tube 2, and a slag cooler connects to the bottom of the slag-drip tube 2.

The above-mentioned nickelclad surrounds the slag-drip tube 2. As illustrated in figure 2, the vertical section from A-A of the nickelclad 1 is in the shape of arcuate or letter U or letter V.

The cross section of the above-mentioned nickelclad is in the shape of ring cycle (as shown in figure 2) or is rectangular with a hole in the middle (as shown in figure 3) or is in the shape of hexagon with a hole in the middle (as shown in figure 4) or is in other geometric patterns with a hole in the middle.

The slag-drip tube is soldered on the upper end of the above-mentioned nickelclad 1, and the wallboard of the primary chamber 4 is soldered on the other end. The nickelclad 1 can produce some deformation for absorbing the differential expansion between the slag-drip tube 2 and the wallboard of the primary chamber 4.

Moreover□the above-mentioned connecting structure also comprises a shield 3 covering the slag-drip tube 2 on the upper end of the nickelclad 1. The shield 3 might be trumpet-shaped, which covers the nickelclad 1 in order to avoid damage to the nickelclad due to the slag leakage from the air distribution plate.

Although the invention has been described with respect to specific embodiments for a complete and clear disclosure, the appended claims are not to be thus limited, those skilled in the art will appreciate that various other embodiments can be provided without departing from the scope of the invention. Accordingly, the invention is defined only by the claims.