# United States Patent [19]

**Foggia et al.**

[11] **Patent Number: Des. 277,478**

[45] **Date of Patent: ** Feb. 5, 1985**


[54] **TELEPHONE ATTENDANT CONSOLE**


[75] Inventors: **Donald A. Foggia**, Ocean, N.J.; **Rolf E. Schneider**, Boca Raton, Fla.

[73] Assignee: **Siemens Corporation**, Iselin, N.J.



[**] Term: **14 Years**

[21] Appl. No.: **362,167**

[22] Filed: **Mar. 26, 1982**

[52] **U.S. Cl.** ..... **D14/58**; D14/53

[58] **Field of Search** ..... D14/52, 53, 58, 101, D14/65, 64, 92; 179/2 DP, 179, 178, 18 BC; D13/12; D18/6, 7, 11



[56] **References Cited**

U.S. PATENT DOCUMENTS

| | | | |
|---|---|---|---|
| D. 211,643 | 7/1968 | Kamp | D14/58 |
| D. 237,625 | 11/1975 | Uolf et al. | D14/58 |
| D. 243,773 | 3/1977 | Foggia | D14/58 |
| D. 251,843 | 5/1979 | Knoll et al. | D14/58 |
| D. 266,512 | 10/1982 | Furbershaw | D14/101 |
| D. 267,173 | 12/1982 | Georgopulos | D14/58 |
| D. 268,181 | 3/1983 | Bonko | D14/60 |
| D. 269,178 | 5/1983 | Foggia et al. | D14/58 |
| D. 269,268 | 6/1983 | Ko | D14/53 |
| D. 273,110 | 3/1984 | Genaro | D14/53 X |

OTHER PUBLICATIONS

GEC Telecommunications Journal 41 (1980) 2 page excerpt, article entitled Digital Transmission/Multi--Terminal Appl.



*Primary Examiner*—A. Hugo Word
*Assistant Examiner*—Horace B. Fay
*Attorney, Agent, or Firm*—Karl F. Milde, Jr.


[57] **CLAIM**

The ornamental design for a telephone attendant console, as shown.

**DESCRIPTION**

FIG. **1** is a front and right side perspective view from above of a telephone attendant console;

FIG. **2** is a rear and left side perspective view from above; and

FIG. **3** is a top plan view thereof, with the handset removed.

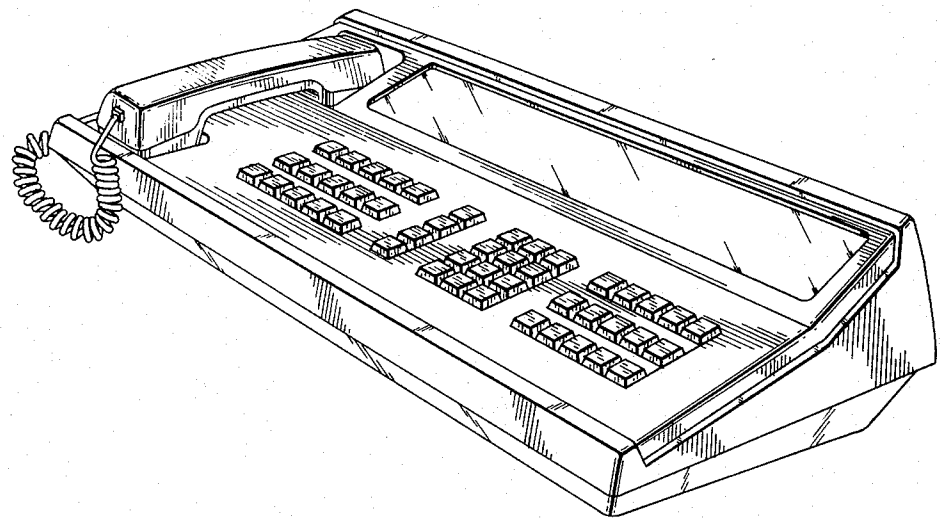

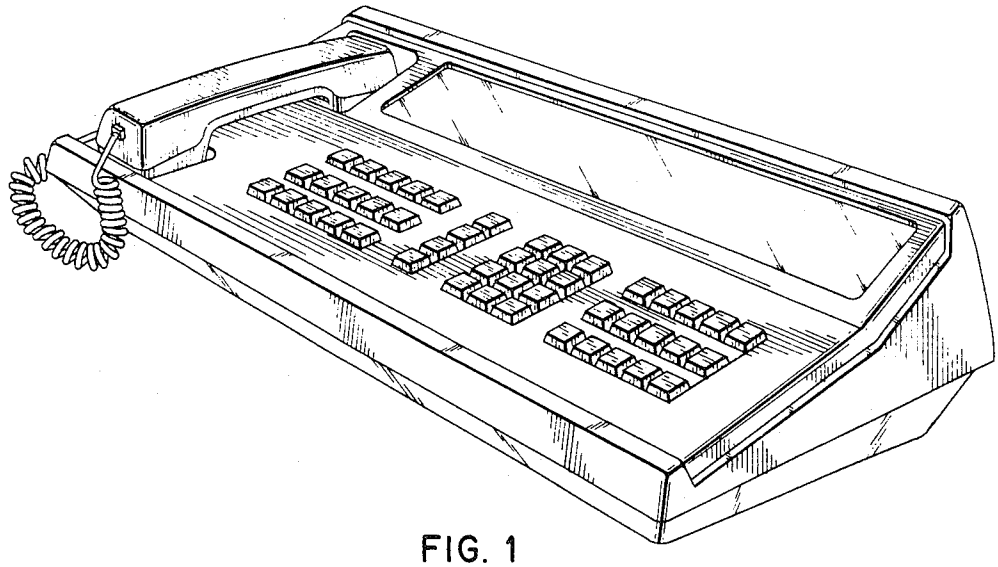

FIG. 1

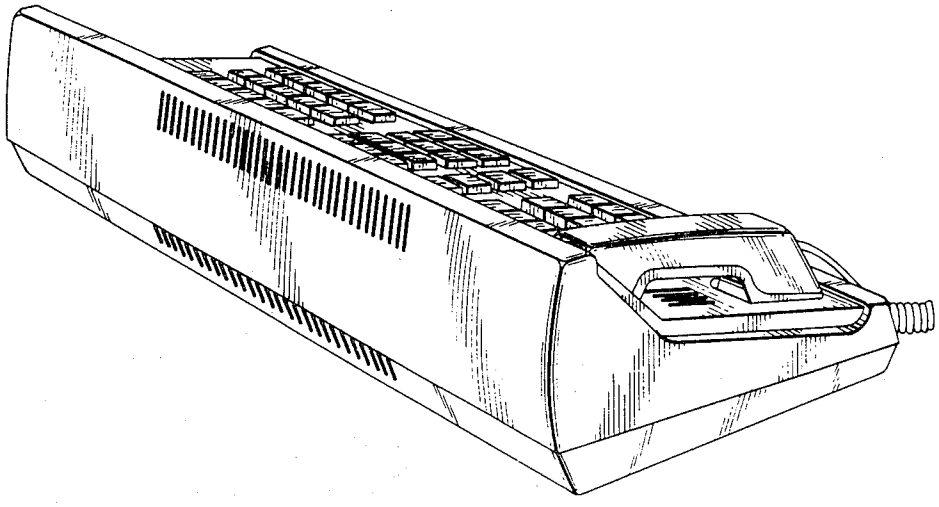

FIG. 2

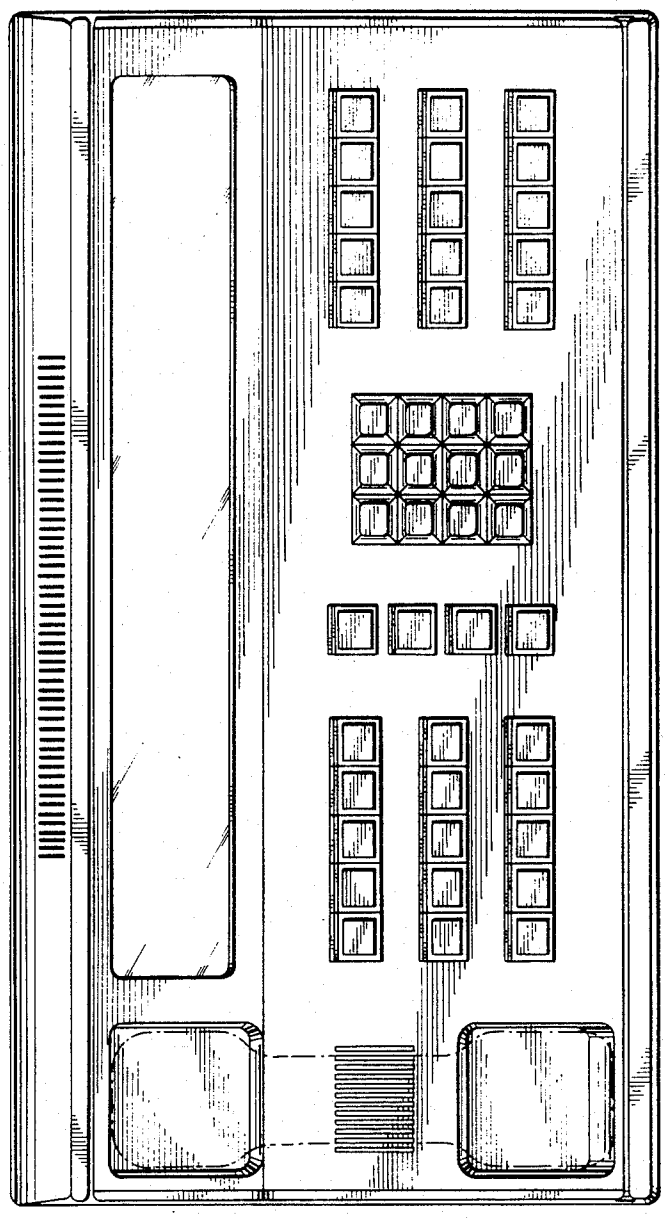

FIG. 3