July 5, 1949. V. J. PRINCE 2,475,401

MACHINE FOR REGRINDING WORN CRANKSHAFTS

Filed Dec. 16, 1946 7 Sheets-Sheet 1

FIG. 1.

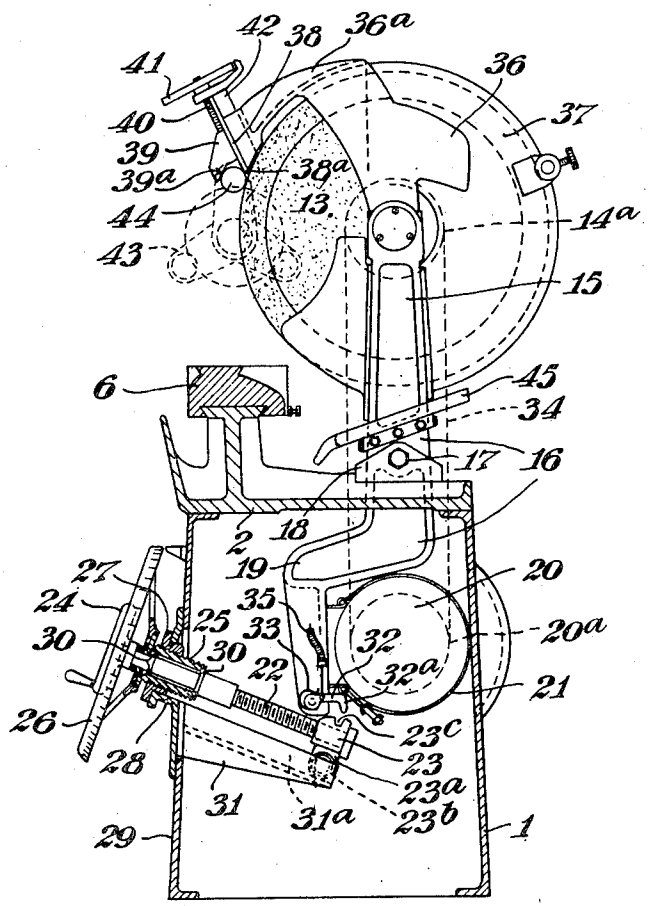

INVENTOR
VICTOR J. PRINCE
By Emory P. Wolf
Atty

July 5, 1949. V. J. PRINCE 2,475,401

MACHINE FOR REGRINDING WORN CRANKSHAFTS

Filed Dec. 16, 1946 7 Sheets-Sheet 2

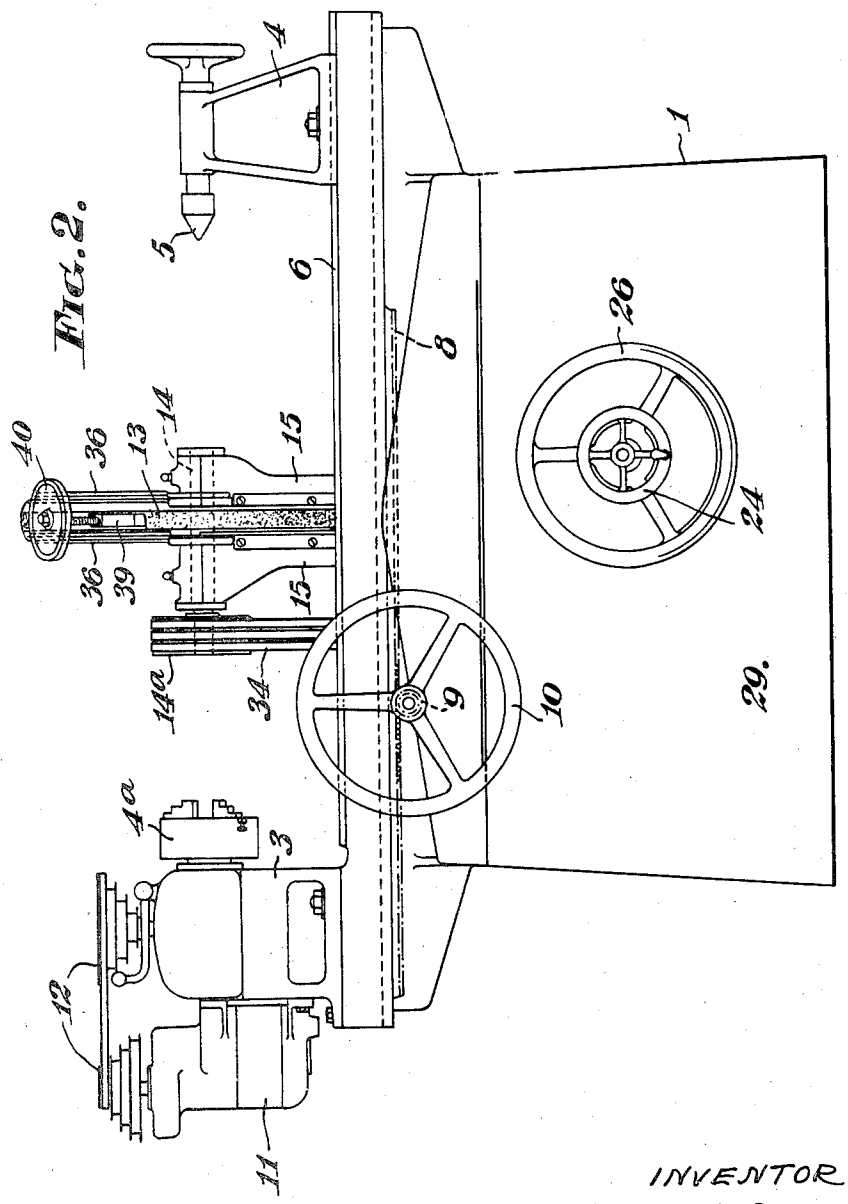

FIG. 2.

INVENTOR
VICTOR J. PRINCE
By Timothy L. Groff
Atty.

MACHINE FOR REGRINDING WORN CRANKSHAFTS

Filed Dec. 16, 1946 7 Sheets-Sheet 3

FIG. 3.

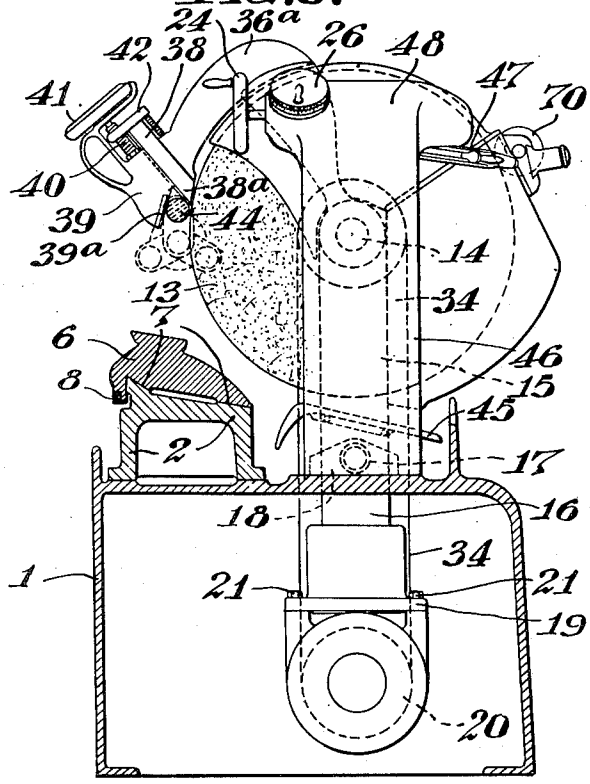

FIG. 5.

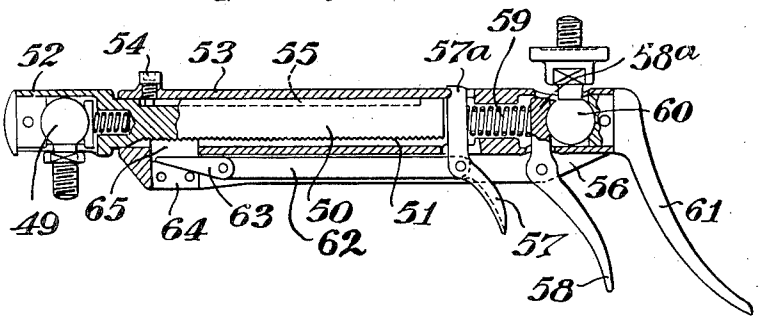

INVENTOR
VICTOR J. PRINCE
By Emory P. Groff
Atty

July 5, 1949. V. J. PRINCE 2,475,401

MACHINE FOR REGRINDING WORN CRANKSHAFTS

Filed Dec. 16, 1946 7 Sheets-Sheet 4

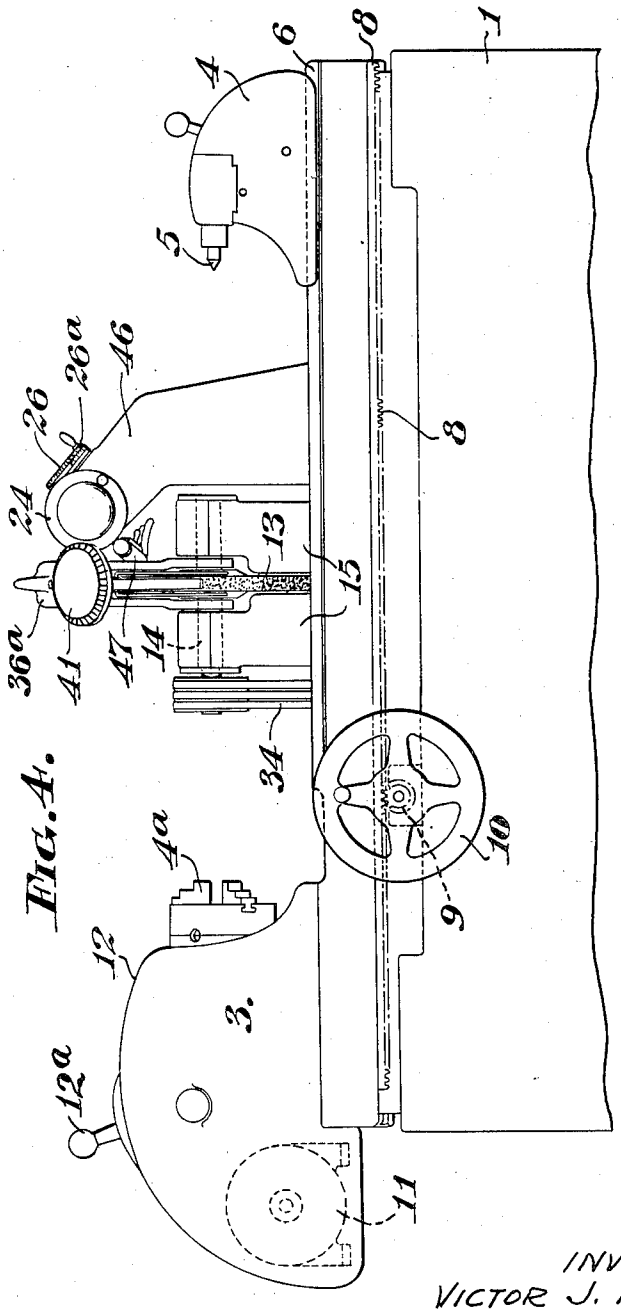

FIG. 4.

INVENTOR
VICTOR J. PRINCE
By Emory D. Roff
Atty

July 5, 1949. V. J. PRINCE 2,475,401

MACHINE FOR REGRINDING WORN CRANKSHAFTS

Filed Dec. 16, 1946 7 Sheets-Sheet 5

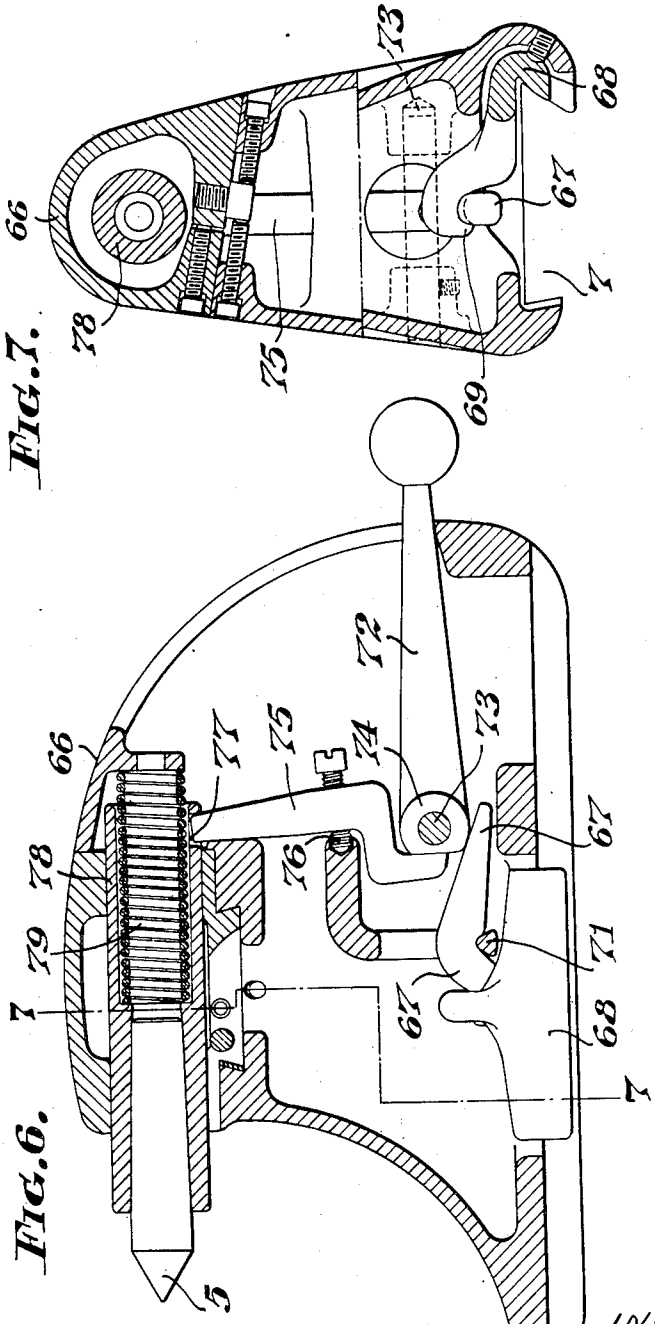

INVENTOR
VICTOR J. PRINCE
By Emory L. Wolff Atty

MACHINE FOR REGRINDING WORN CRANKSHAFTS

Filed Dec. 16, 1946 7 Sheets-Sheet 6

FIG. 10.

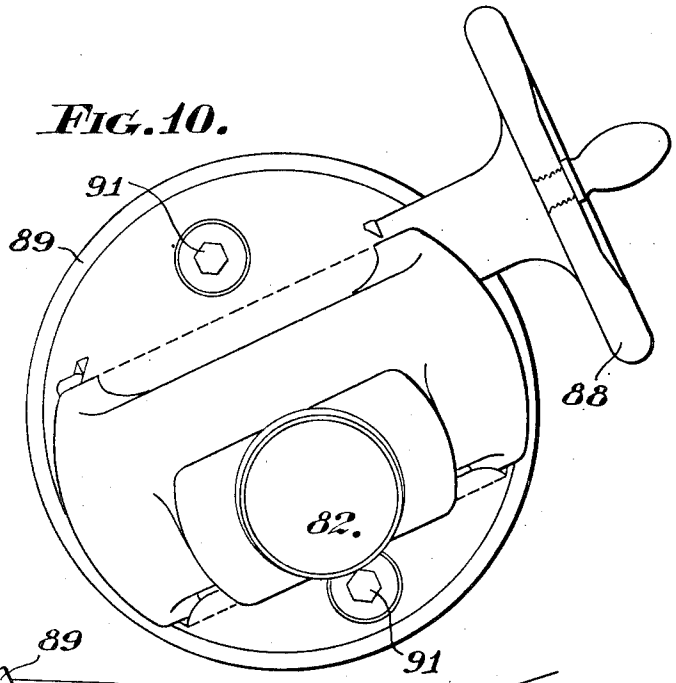

FIG. 8.

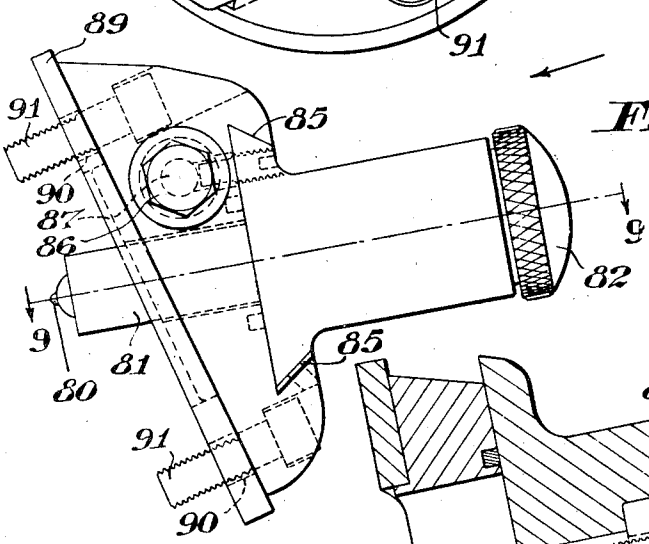

FIG. 9.

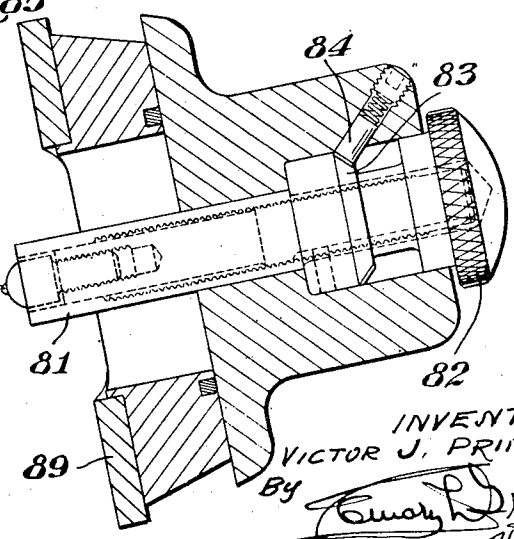

INVENTOR
VICTOR J. PRINCE
BY
Atty

MACHINE FOR REGRINDING WORN CRANKSHAFTS

Filed Dec. 16, 1946 7 Sheets-Sheet 7

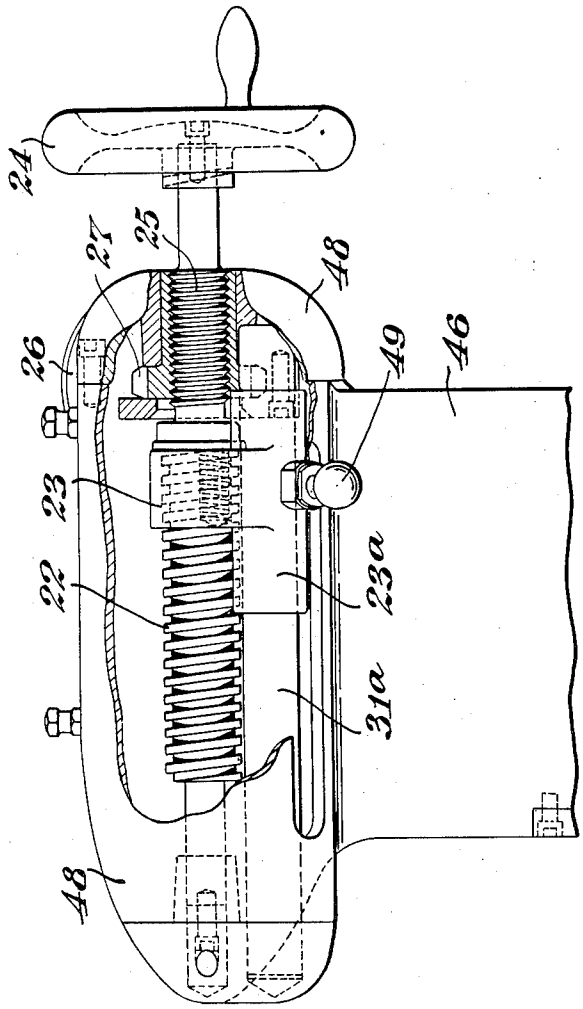

FIG. 11.

INVENTOR
Victor J. Prince.
BY Emory L. Groff
ATTORNEY

Patented July 5, 1949 2,475,401

UNITED STATES PATENT OFFICE

2,475,401

MACHINE FOR REGRINDING WORN CRANKSHAFTS

Victor John Prince, Kingston-on-Thames, England

Application December 16, 1946, Serial No. 716,484
In Great Britain April 22, 1943

Section 1, Public Law 690, August 8, 1946
Patent expires April 22, 1963

9 Claims. (Cl. 51—72)

1

This invention relates to machines for regrinding worn crankshafts in which a grinding wheel is rotated in contact with the periphery of a big end journal or crankpin, or shaft ends or journals, the work being moved whilst in contact with the grinding wheel so that the whole of the periphery of the appropriate part of the work is negotiated. In existing machines for regrinding crankshafts the grinding wheel, which usually is considerably larger in diameter than the work, is mounted to rotate upon a fixed axis so that it is necessary to so set up the work that the actual part, for example crankpin being reground must be rotated on its own axis. Such a method of setting up is not only tedious and difficult but, particularly when grinding a crankpin, the parts of the shaft on its normal axis of rotation, for example, shaft ends and flanges, tend to bias the work, such bias being enhanced by centrifugal force. Also it is necessary to set up the crankshaft for each set of coaxial crankpins and also it is not possible to make a speedy change from one crankpin to another.

The main object of this invention is to provide a machine wherein it is unnecessary to set up the work for the grinding of each part.

An important feature of the invention is that instead of mounting the grinding wheel axis is fixed bearings, the bearings and consequently the wheel are mounted so as to be capable of swinging movement towards or away from the work, and means are provided for coupling the wheel axle to the part being worked in such a manner that the work itself in the case of a crankpin will impart a swinging movement to the grinding wheel which results in the periphery of said wheel always being maintained a fixed distance from the crankpin axis although the endless path generated by the points of contact of the grinding wheel and work is not concentric with the axis of rotation of the work. This is preferably achieved by coupling the wheel axis to the crankpin by a link, which link has means such as a bifurcated yoke at its end to embrace the pin.

It is to be understood that suitable means for making necessary adjustments, for example, to close up accurately the grinding wheel periphery towards the work axis will be provided.

The accompanying drawings illustrate two preferred forms of machine constructed in accordance with the invention, both machines being capable of grinding both main journals and crankpins for one centering or mounting of the crankshaft.

2

In the drawings:

Figure 1 is a sectional side elevation of one form,

Figure 2 is a front elevation,

Figure 3 is a view similar to Figure 1 of the second and preferred form of the invention,

Figure 4 is a front view of the upper part of the machine illustrated in Figure 3,

Figure 5 is a sectional view of the telescopic coupling member used in the machine illustrated in Figures 3 and 4.

Figure 6 is a sectional elevation of a preferred form of tailstock employed in the machine illustrated in Figures 3 and 4.

Figure 7 is a section on the line 7—7, Figure 6.

Figure 8 is a side view of the grinding wheel trueing attachment.

Figure 9 is a section on the line 9—9, Figure 8, and

Figure 10 is a rear view of the attachment looking in the direction of the arrow in Figure 8.

Figure 11 is a side view of the feed screw for the grinding wheel.

Like reference numerals indicate like or equivalent parts in the two modifications.

Referring to the drawings, the machine frame 1 is provided with a bench plate 2 similar to that of a lathe with a headstock 3 at one end and a tailstock 4 at the other end with chuck 4a and rolling centre 5 mounted relatively adjustably on a sliding carriage 6 adapted to be traversed on a slide 7 of the plate 2 by a rack 8 and a pinion 9 driven by a handwheel 10. A small horsepower, for example half horsepower three phase electric motor 11, with a suitable reduction gear, drives the chuck shaft via a four speed belt and pulley or other suitable variable speed transmission device 12.

The grinding wheel is indicated by the reference numeral 13, and a distinctive feature of the invention is that a crankshaft can be set up normally centred by the chuck 4a and rolling centre 5 so that it can be rotated about its normal axis for grinding both its main journals supported truly coaxial with the axis of rotation of the shaft and its crankpins or journals oc-

cupying their normal throw or radially spaced positions relatively to the normal axis of the shaft. For this purpose, instead of mounting the grinding wheel shaft **14** in fixed bearings, such bearings are housed in the upper ends of two parallel side arms **15** constituting the bifurcated upper part of a substantially vertical beam **16** pivoted between its ends by a pivot pin or coaxial lateral lugs **17** journalled in bearers **18** fixed to the bench plate **2**.

The lower end of this oscillatable beam is cranked inverted L fashion as at **19** to accommodate a motor, for example a three horsepower three phase electric motor **20** secured to the vertical limb of such cranked part of the beam by any suitable means such as, for example, a steel band **21** tensioned about the motor housing and anchored to such vertical limb. By this means, the grinding wheel axis can be traversed substantially perpendicularly or radially relatively to the chuck axis, this condition occurring when the crank pins or journals of the crankshaft are being ground.

When the main journals of the shaft are to be ground the position of the grinding wheel axis is carefully selected by the operator, but when a crankpin is being ground, the work itself imparts such movement to the grinding wheel as will ensure the whole perimeter of the appropriate crankpin being ground properly. although the endless path generated by the points of contact of the grinding wheel and the work is not concentric with the axis of rotation of the crankshaft.

The means by which the operator controls and selects the position of the grinding wheel axis provides for quick and fine adjustments and comprises a feed screw **22** receiving a nut **23** adapted to be traversed along the feed screw **22** for quick adjustments by the rotation of a small handwheel **24** and a sleeve **25** loose upon the unthreaded end of the feed screw **22** and rotated by a large handwheel **26** to traverse such sleeve axially through a split nut **27** supported within a bracket **28** fixed to the front panel **29** of the machine frame. The sleeve **25** imparts translative movements to the feed screw **22** through the medium of thrust bearings **30**.

The nut **23** on the feed screw **22** is formed with a depending lug **23*a*** guided in a channel **31*a*** of a fixed inclined guide arm or ramp **31**, the lug **23*a*** carrying a roller **23*b*** running upon the base of the said channel.

The beam **16** is readily detachably coupled to this nut **23**, and such connection is effected by a toggle or latch **32**, pivoted at one end to the lower end of the beam **16**, its free end being formed with a depending lug **32*a*** which is urged by a torsion spring **33** into a recess **23*c*** of the nut **23**. It will be appreciated that when the lug **32*a*** is engaged in the nut **23**, translative movement imparted to such nut will transmit angular adjustment to the beam to vary the pressure of the grinding wheel against the work, for example for grinding a main journal of a crankshaft.

The grinding wheel shaft **14** and the shaft of the motor **20** are connected by belts **34** passed over pulleys **14*a*** and **20*a*** respectively on such shafts so that the grinding wheel is permanently coupled to the motor **20**.

The latch or toggle **32** is operated by any suitable remote control device for disengaging its lug **32*a*** from the nut **23**, for example by means of a Bowden cable **35** connected at one end to the toggle and at the other end to a handle or treadle, conveniently accessible to the operator.

For grinding a big end journal or crankpin, means is provided to maintain the work at a correct relative distance from the axis of the grinding wheel, the beam **16** being disconnected from the nut **23** so that it is free to oscillate under the control of the work. Such means comprises a pair of arms **36** radiating from and supported loosely upon the grinding wheel shaft by bearings and cranked downwardly as at **36*a*** towards the work substantially in continuity with the periphery of the customary guard **37**. The free ends of these cranked extensions **36*a*** are fitted with steel parallel guide bars **38** for a steel sliding finger **39** which is adjustable translatively selectively to said guide bars by a feed screw **40** operated by a hand wheel **41** supported by a bracket **42** joining the free ends of the said cranked extensions **36*a*** of the arms **36**. The arms **36** thus form a link connection between the work and the axis of the grinding wheel so as to oppose any tendency of the work to vibrate or bounce relatively to the wheel or vice versa. The size to which the crankpin **44** is to be ground is regulated by the handwheel **41** which can be manipulated whilst the grinding is in progress as likewise can be the handwheel **26** for adjusting the grinding wheel relatively to the work. Both of these handwheels can be graduated to afford a rough measurement of the adjustment, the actual measurement of the work being by means of a hand gauge.

The work, indicated in Figure 1 by broken lines **43** as a crankpin **44** is engaged between the guide bars **38** and the finger **39**, the finger **39** having an inclined work-engaging lower edge **39*a*** which forms substantially a V with the lower parts of the guide bars **38** (as shown in Figure 1) to engage wide angle spaced points, for example 120° apart of the work, whilst the lower extremities of the said guide bars are bevelled as at **38*a*** so that they can almost contact with the grinding wheel in close proximity to the actual grinding zone. The inclination of the work-engaging edges of the guide bars is such as to form an obtuse angle with the tangent common to the work and grinding wheel, and consequently it will be seen by reference to Figure 1 of the drawings that the work is firmly engaged at three points. By such means the work is maintained in constant effective engagement with the grinding wheel, and the grinding wheel axis oscillates in conformity with the endless path generated by the point of contact between wheel and work.

A guard plate or deflector **45** is fixed to the beam **16** just above the fulcrum of the beam to deflect metal particles on to the plate **2** which otherwise might fall down to the motor **20**.

Referring now to the form of machine illustrated in Figures 3 and 4, the essential details follow closely on those illustrated in Figures 1 and 2, the machine in Figures 3 and 4 having been designed with a view to simplified operation, robust and rigid construction and the production of work with a high degree of accuracy, without employing a highly skilled operator. Like reference numerals on the same or equivalent parts in the two forms of machine have been used.

From Figures 3 and 4 it will be seen that a rigid control post **46** is mounted on the frame and that the grinding wheel assembly is coupled thereto by means of a telescopic connector **47** later described in detail. This connector allows

for the easy release of the grinding wheel assembly from the control post when it is desired to work on a crankpin. The head 48 houses a feed screw, the movement of which is obtaned by the two hand wheels 24 and 26, the feed screw receiving a nut which carries a ball head 49 projecting from the head. The hand wheel 24 turns the screw directly to cause rotation of the feed screw resulting in fore and aft movement of the ball head 49, which movement is transmitted to the grinding wheel assembly through the connecting member 47 enabling the operator to move the wheel in relation to the work when grinding main bearings. The hollow head 48 houses the means by which the operator controls and selects the position of the grinding wheel axis when grinding main journals, and as shown in Figure 11, said means comprise the feed screw 22, the movement of which is obtained by the two hand wheels 24 and 26, the feed screw 22 receiving a nut 23 which carries a depending guide member 23*a* moving on a slide 31*a*, which guide carries the ball head 49 projecting through a slot through the head 48. The hand wheel 24 turns the feed screw 22 directly to cause rotation of the said feed screw resulting in fore and aft movement of the ball head 49, which movement is transmitted to the grinding wheel assembly through the connecting member 47 enabling the operator to move the wheel in relation to the work when grinding main bearings. The wheel 26 is coupled by means of a worm drive, the wheel 27 of which is seen in Figure 11, and threaded sleeve 25 around a fine threaded part on the feed screw so that a fine adjustment can be obtained. The actual quick and fine adjusting mechanism follows conventional practice. The turning of the wheel 26 results in axial movement of the screw 22.

However, the hand wheel 26 may move with respect to a suitably calibrated scale on a fixed part around its periphery, so that the operator can work to fine limits with the minimum use of a micrometer. For instance, if after a micrometer check it is necessary to remove .001 inch from a main bearing, this can be done by the use of the fine adjustment scale, the micrometer being used only for the final check.

It will be seen that the motor 26 is carried by the beam 16 below the swinging axle 17 and serves to counterbalance the grinding wheel, whilst the grinding wheel assembly is held rigidly on the upper part of the control post, resulting in an extremely rigid construction.

Figure 5 is a sectional view of the telescopic coupling member. This comprises an inner rod member 50 having a toothed or rack part 51, the one end of the rod being coupled to a hollow member 52 in which the ball head 49 is received. The rod 50 telescopes in the sleeve 53 and is prevented from rotation by the screw 54, within the spline 55 in the rod 50. The sleeve 53 has a pair of flanges one of which 56 is shown in the drawing, and between these flanges two finger triggers 57, 58 are mounted, the fingers of which (57*a* and 58*a* respectively) project into housings within the sleeve end. The fingers are urged apart by the coil spring 59.

Secured to the grinding wheel guard is a projecting ball head 60, and the grinding wheel assembly is released from the control post merely by squeezing the trigger 58 and stock 61, thereby releasing the ball. The other trigger 57 allows for a coarse adjustment of the position of the grinding wheel on its axis. Pivoted to the said

trigger 57 is a link 62, the other end of which carries a wedge member 63, co-operating with an inclined plane 64, the upper surface of the wedge carrying the serrated faced block 65, which mates with the rack 51. The upper end of the finger 57*a* is notched so that when the trigger 57 and stock 61 are squeezed the said trigger fulcrums about the notch. This retracts the link allowing the block 65 to drop so that the sleeve 53 can now move axially with respect to the rod.

The above arrangement provides a very ready and rigid engage and release coupling between the grinding wheel assembly and the control post. Moreover, it allows for rapid initial adjustment of the grinding wheel periphery with respect to the work when grinding main bearings.

Referring now to Figures 6 and 7, there is illustrated in front and side section respectively a preferred and novel form of tailstock. The tailstock illustrated is controlled by a single lever which serves the dual purpose of clamping or releasing the tailstock on the bed, and of applying load to the rolling centre when the work is set up. The load is of importance when grinding crankshafts, and the actual load is determined by the design of the tailstock and is not left to the skill of the operator.

The main casting or hollow housing 66 is shaped to embrace at its bottom the slide 7. Pivoting on the bar or lever 67 is the locking member 68, which member has a nose part 69 beneath which engages one end of the lever 67 rockable on the cross bar 71. The operating lever 72 is pivoted on a cross pin 73 and has a cam 74 thereon which cam is formed to contact with both levers 67 and 75. The operating lever 72 extends through a slot in the housing 66. The lever 75 is adjustable by means of the bolt and socket pivot arrangement 76, and the upper end of said lever 75 engages within a slot 77 in the centre sleeve 78. This centre sleeve is urged forwardly by means of the spring 79.

In using the tailstock, the operator raises the hand lever 72 and this firstly pivots the lever 75 so that the centre sleeve is moved axially against the spring to release the work. Further upward movement of the lever 72 releases the tailstock on its slide. Downward movement firstly locks the tailstock to the bed, and then releases the spring which moves the centre sleeve forwardly. Thus, by a simple operation, without the use of spanners or other tools, the tailstock can be moved to position, and the load on the work is always constant as determined by the spring 79.

It will be appreciated that with either of the modifications it is necessary for the wheel surface to be trued up accurately, and for the plane of the surface to be dead parallel with the axis of the grinding wheel. Such a wheel trueing device is indicated generally in Figure 3 by the reference numeral 70 and its essential constructional features are shown in Figures 8, 9 and 10. The device consists of a diamond 80 mounted in a carrier 81 which carrier can be moved axially by the knurled nut 82. Turning with the nut is a notched bush 83, and a spring pressed plunger 84 contacts therewith. The arrangement is such that for each movement of the plunger from one notch to the next, the diamond is advanced or retarded a fixed part e. g. 0.001 part of an inch. The assembly is shaped to be mounted in the dovetail slideway 85, and is coupled to a nut member 86, which is threaded on the screw rod 87, which rod is turned by the hand wheel 88.

When it is necessary to true up the grinding wheel, the hand wheel 86 is rotated to bring the diamond carrier and assembly to the limit in one direction and the knurled nut moved so that the diamond is advanced one step. Then with the grinding wheel rotating, the hand wheel 88 is turned so that the diamond slowly traverses the grinding surface.

It will be understood that the initial setting up of the wheel trueing device must be undertaken so that this traversing movement maintains the diamond dead parallel with the grinding wheel axis. To achieve this, a wedge plate 89 is mounted between the attachment and the grinding wheel cover, said plate having arcuate slots 90 therethrough, through which pass the bolts 91, which serve to secure the attachment to the cover. It will be seen that by loosening off the bolts 91 and rotating the plate 89 slightly, and then tightening the bolts, the linear path of travel with respect to the axis of the grinding wheel can be altered. This adjustment is intended for initial setting, as when the path has been accurately adjusted, with normal use no further setting will be necessary.

Instead of using a variable speed transmission device employing a belt and pulley arrangement as shown in Figure 2, a device of known form having a hand control lever 12*a* moving through an arc as shown in Figure 4 may be used, the speed being infinitely variable between maximum and minimum speeds.

I claim:

1. A machine for grinding and regrinding crankshafts comprising a machine frame and bed, means to support the work for rotation about its normal axis of rotation, a grinding wheel mounted on a beam above the machine bed, said beam being mounted to swing towards or away from the work, adjustable and detachable coupling means for connecting the beam to a fixed part of the machine, said coupling means connecting the grinding wheel beam to a nut, a manually controlled rotatable feed screw to traverse said nut, supporting means for said feed screw to allow axial movement of said screw, and a second feed screw device to move said nut traversing feed screw axially and crankpin engaging means carried by the swinging beam, which crankpin engaging means are adjustable to different diameters and throws of crankpins and serve to maintain the work pressed against the grinding wheel for complete rotation of the crankshaft.

2. A machine for grinding and regrinding crankshafts comprising a machine frame and bed, means to support the work for rotation about its normal axis of rotation, a grinding wheel mounted on a beam above the machine bed, said beam being mounted to swing towards or away from the work, a rigid control post upstanding from the machine bed and adjacent the grinding wheel assembly, with means to couple the said assembly to, or release same from, the post or support and a manually controlled feed screw device associated with the post or support and connected to the coupling means, which feed screw serves to effect the adjustment of the position of the grinding wheel axis and crankpin engaging means carried by the swinging beam, which crankpin engaging means are adjustable to different diameters and throws of crankpins and serve to maintain the work pressed against the grinding wheel for complete rotation of the crankshaft.

3. A machine for grinding and regrinding crankshafts comprising a machine frame and bed, means to support the work for rotation about its normal axis of rotation, a grinding wheel mounted on a beam above the machine bed, said beam being mounted to swing towards or away from the work, a rigid control post upstanding from the machine bed and adjacent the grinding wheel assembly, with means to couple the said assembly to, or release same from, the post or support, said coupling means comprising a telescoping member having means for quickly releasing its one end from either the post or the grinding wheel assembly and manually controlled means whereby the overall length of the said member can be varied to provide a rapid means for setting up initially the grinding wheel with respect to the work surface when grinding main journals, and a manually controlled feed screw device associated with the post or support and connected to the coupling means, which feed screw serves to effect the adjustment of the position of the grinding wheel axis.

4. In a machine for grinding and regrinding crankshafts, the combination comprising a frame, means carried by said frame to support the work for rotation about its normal axis both for grinding main journals concentric with said axis and for crank journals having their normal throw whilst being ground, a grinding wheel, means for mounting said wheel swingably carried by said frame, means for driving said wheel and urging said wheel mounting means to vertical position, and means adjustable along a fixed axis and connectible to said wheel mounting means for holding same in a predetermined position.

5. In a machine for grinding and regrinding crankshafts, the combination comprising a frame, means carried by said frame to support the work for rotation about its normal axis both for grinding main journals concentric with said axis and for crank journals having their normal throw whilst being ground, a grinding wheel, means for mounting said wheel swingably carried by said frame, means for driving said wheel and urging said wheel mounting means to vertical position, means mounted for limited rotation on the shaft of said wheel for holding a crank journal adjacent said wheel, and adjustable means connectible to said wheel mounting means for holding same in a predetermined position.

6. In a machine for grinding and regrinding crankshafts, the combination comprising a frame, means carried by said frame to support the work for rotation about its normal axis both for grinding main journals concentric with said axis and for crank journals having their normal throw whilst being ground, a grinding wheel, means for mounting said wheel swingably carried by said frame, means for driving said wheel and urging said wheel mounting means to vertical position, means mounted for limited rotation on the shaft of said wheel for holding crank journals of different diameters adjacent said wheel, and adjustable means connectible to said wheel mounting means for holding same in a predetermined position.

7. In a machine for grinding and regrinding crankshafts, the combination comprising a frame, means carried by said frame to support the work for rotation about its normal axis both for grinding main journals concentric with said aixs and for crank journals having their normal throw whilst being ground, a grinding wheel, means for mounting said wheel swingably carried

by said frame, means for driving said wheel and urging said wheel mounting means to vertical position, means mounted for limited rotation on the shaft of said wheel for holding crank journals of different diameters adjacent said wheel, said crank journal holding means including guidingly related adjustable jaws engaging a crank journal, and adjustable means connectible to said wheel mounting means for holding same in a predetermined position.

8. In a machine for grinding and regrinding crankshafts, the combination comprising a frame, means carried by said frame to support the work for rotation about its normal axis both for grinding main journals concentric with said axis and for crank journals having their normal throw whilst being ground, a grinding wheel, means for mounting said wheel swingably carried by said frame, means for driving said wheel and urging said wheel mounting means to vertical position, means mounted for limited rotation on the shaft of said wheel for holding crank journals of different diameters and throws adjacent said wheel, and adjustable means connectible to said wheel mounting means for holding same in a predetermined position.

9. In a machine for grinding and regrinding

crankshafts, the combination comprising a frame, means carried by said frame to support the work for rotation about its normal axis both for grinding main journals concentric with said axis and for crank journals having their normal throw whilst being ground, a grinding wheel, means for mounting said wheel swingably carried by said frame, means for driving said wheel and urging said wheel mounting means to vertical position, means adjustable along a fixed axis and connectible to said wheel mounting means for holding same in a predetermined position, and means for connecting said wheel mounting means to said adjustable holding means.

VICTOR JOHN PRINCE.

REFERENCES CITED

The following references are of record in the file of this patent:

UNITED STATES PATENTS

Number	Name	Date
1,833,602	Batterman et al.	Nov. 24, 1931
1,871,504	Einstein et al.	Aug. 16, 1932
2,071,882	Kremer	Feb. 23, 1937
2,340,602	Leusch	Feb. 1, 1944
2,349,108	Myers	May 16, 1944