Jan. 25, 1955 T. WILLIAMS 2,700,250

HEAD ACTUATING MECHANISM FOR DUMMIES

Filed Feb. 6, 1952

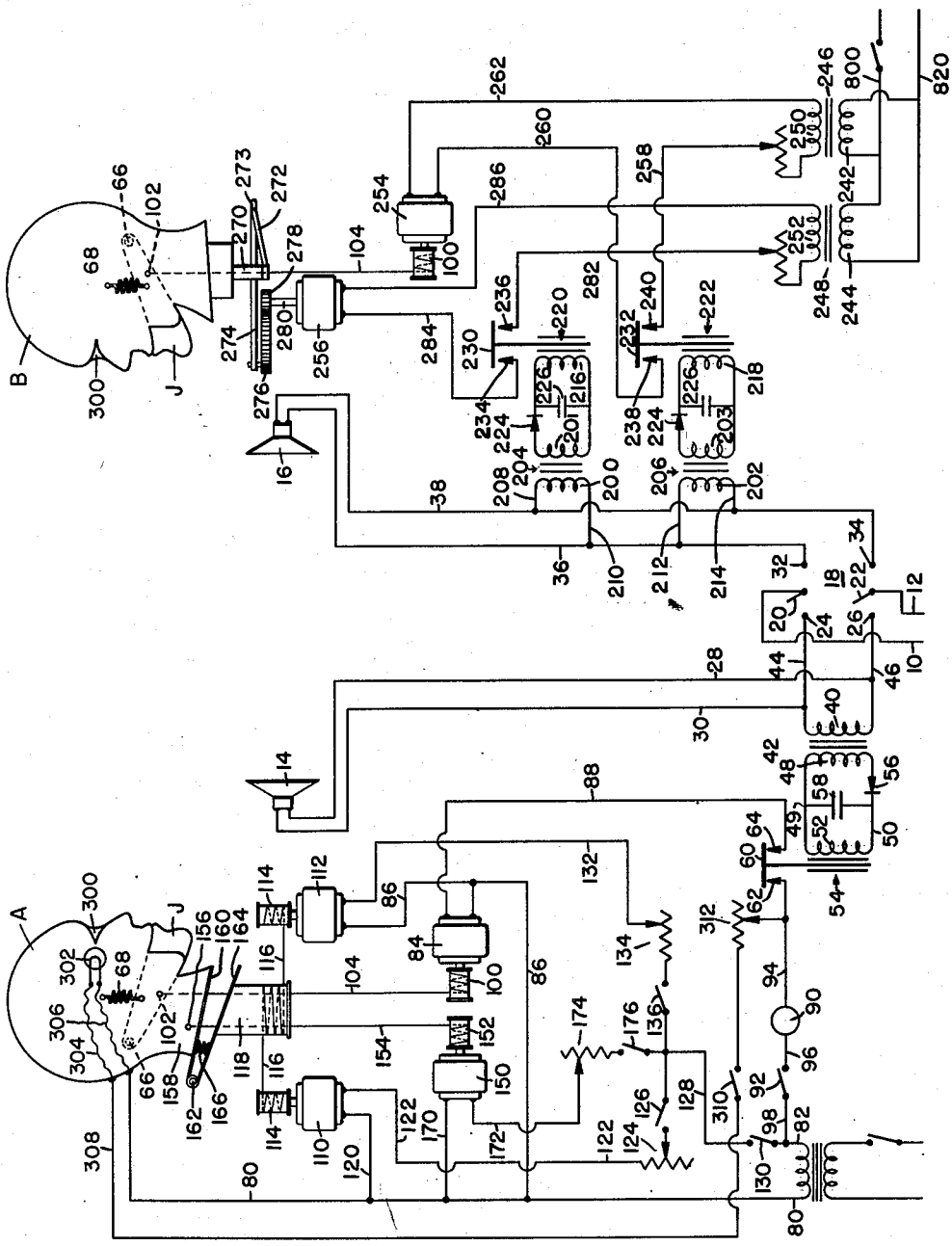

INVENTOR.

Todd Williams

BY

J. Warren Kinney, Jr.

Atty.

United States Patent Office 2,700,250 Patented Jan. 25, 1955

2,700,250

HEAD ACTUATING MECHANISM FOR DUMMIES

Todd Williams, Cincinnati, Ohio

Application February 6, 1952, Serial No. 270,195

1 Claim. (Cl. 46—232)

This invention relates to dummies or puppets, and more particularly to electrical means for actuating the movable jaw of a dummy, puppet, or the like.

An object of the invention is to provide simple yet highly effective means for actuating the movable jaw of a dummy, puppet, or the like from and in response to electrical impulses induced by actual speech, whether direct, recorded or transmitted.

A further object of the invention is to provide means for actuating the movable jaw of a dummy, puppet, or the like whereby to simulate actual pronunciation of words having one or more syllables.

These and other objects are attained by the means described in the specification and as disclosed in the accompanying drawing, in which the figure of the drawing is a schematic drawing of the mechanical and electrical elements comprising the present invention.

With reference to the drawing, the numerals **10** and **12** denote a source of modulated electrical currents and contemplate such currents whether from a microphone, voice coil of the speaker circuit of a radio, recording, etc. In any event, whatever the source of electrical energy, it is of such nature as to actuate the speech coil of loudspeakers **14** and **16**.

In the preferred embodiment of the invention a double pole double throw switch **18** is provided for optionally connecting speaker **14** to conductors **10** and **12** through switch arms **20**, **22**, contacts **24**, **26** and conductors **28** and **30**; or for connecting speaker **16** thereto through contacts **32**, **34** and conductors **36** and **38**.

The primary **40** of a transformer **42** is series connected across contacts **24** and **26** by conductors **44** and **46**, it being noted that speaker **14** is in a parallel circuit therewith. The current induced within secondary **48** is connected via conductor **50**, rectifier **56** to coil **52** of a relay denoted generally by the numeral **54** and conductor **49**. A capacitor **58** is connected across conductors **49** and **50** as illustrated.

From the foregoing it will be noted that the armature of the relay solenoid **54** will be actuated downwardly with each sound impulse transmitted to speaker **14**. Actuation of the solenoid causes bar **60** to close an electrical circuit between contact points **62** and **64**.

The letters A and B denote the head portion of dummies, puppets or other similar devices each having a movable jaw J pivotally connected as at **66**. The jaws are normally closed by means of a spring **68**.

Actuation of the jaw of device A is accomplished by means of a low voltage current across conductors **80** and **82** as follows: The numeral **84** denotes a low voltage electric motor, such as a 1/20 horsepower, 6 volt fan motor one side of which is connected by conductor **86** to line **82**, the other side being connected by conductor **88** to contact point **64** of relay **54**. Contact **62** is connected through meter **90** and switch **92** to line **82** by conductors **94**, **96** and **98**.

A spool **100** is secured to and carried by the shaft of motor **84**, said spool being connected to jaw J as at **102** by a length of flexible cord or the like, **104**, whereby the jaw will be lowered each time an electrical impulse reaches motor **84**.

I have found that an electric motor such as **84** has certain advantages over a regular solenoid, since the operational characteristics of the motor are absolutely noiseless and no heating up or damage occurs when the motor is energized after the jaw has been pulled to a full open position.

Spring **68** will promptly retract jaw J to a closed position in a very normal and lifelike manner when the flow of electrical energy to motor **84** has been terminated, even though such interruption be but a fraction of a second.

I have provided simple yet highly effective means for turning the head A from side to side, causing it to bow and for giving expression to the eyes.

Turning of the head is accomplished by means of a pair of motors **110** and **112**, each of which includes a spool or drum **114** connected by a cord, or the like, **116** to a rotatable collar **118** to which the head A is suitably secured.

Motor **110** is connected across lines **80** and **82** by conductors **120**, **122**, variable resistance **124**, switch **126**, conductor **128** and switch **130**, whereas motor **112** is connected via conductors **86**, **132**, variable resistance **134**, switch **136**, conductor **128** and switch **130**.

By operating switches **126** and **136** the head may be remotely turned from side to side, the rate of turn being controlled by means of the variable resistances **124** and **134**.

Bowing of the head is accomplished by means of motor **150**, spool or drum **152**, cord, or the like, **154** secured as at **156** to the neck **158** of head A, it being noted that the neck is secured to and carried by plate **160** hinged at **162** to lower plate **164**. Plate **164** is secured to the upper portion of collar **118**. A spring **166** normally and yieldably urges plates **160** and **164** apart about their hinged connection.

Motor **150** is connected across lines **80** and **82** by means of conductors **170**, **172**, variable resistance **174**, switch **176**, conductor **128** and switch **130**.

With reference now to device B, which uses modified actuating circuits and operating mechanisms, it will be noted that the primaries **200** and **202** of transformers **204** and **206** are connected in parallelism with the circuit to speaker **16** by means of conductors **208**, **210**, **212** and **214**, respectively. The secondary coils **201** and **203** are connected to coils **216** and **218** of relays **220** and **222** through rectifier **224** and capacitor **226**, as illustrated, whereby contact bars **230** and **232** will be lowered into circuit closing relationship with contact points **234—236** and **238—240**, respectively, each time an electrical impulse passes through lines **36** and **38**.

A source of power from lines **800** and **820** may be passed through primaries **242** and **244** of transformers **246** and **248**, the secondaries **250** and **252** of which are utilized to actuate motors **254** and **256**.

Motor **256** is the jaw actuating means the electrical circuit to which is controlled by relay **222**, conductor **258**, **260**, **262** and secondary coil **250**.

Head B is secured to a rotatable shaft **270** which is caused to oscillate by means of levers **272** and **274** pivotally connected at **273** from the rotary motion of gear **276** driven by pinion **278** in shaft **280** of motor **256**. This motor is simultaneously energized via secondary **252**, conductor **282**, relay **230**, conductors **284** and **286** each time motor **254** is energized, whereby head B will be slowly turned first in one direction and then in another direction in an imperceptible step-by-step manner as the jaw is actuated.

In actual operation of the device an operator by manipulating switch **18** will cause first one and then the other of heads A and B to become actuated.

In head B the head turning mechanism is synchronized with and actuated by the same electrical impulses which energize the speaker **16** and jaw motor **254**; whereas in head A all head motions are manually controlled except the jaw movement.

In the preferred embodiment of the invention I have provided artificial eyes **300** in head A and behind each eye I have located an incandescent lamp **302** connected by conductors **304**, **308**, switch **310**, variable resistance **312**, conductor **94** to line **82**, and through conductor **306** to line **80**. The eyes will thus be lit up whenever switches **92** and **310** are closed and the intensity of illumination determined by resistance **312**.

It should, of course, be understood that if desired suitable filtering means may be utilized, in lieu of switching means **18**, for automatically discriminating frequencies

whereby frequencies within one range will be automatically impressed upon speaker **14** and head A, whereas frequencies within another range will be automatically impressed upon speaker **16** and head B.

It should be understood that various changes in the structural details of the device may be made, within the scope of the appended claim, without departing from the spirit of the invention.

What is claimed is:

In combination with the head of a dummy figure having a jaw portion pivoted for movement between open and closed positions, spring means connected to said portion normally to urge the same into closed position, a loud-speaker, and a circuit connected to said loud-speaker for energizing the same in accordance with electrical speech signals, a relay connected for energization from said circuit to close its normally open contacts, a

rotary motor having a shaft and a spool secured on said shaft, a flexible cord secured at one end to said jaw portion and wrapped around said spool, whereby energization of said motor pulls said cord to move said jaw portion toward open position against the tension of said spring means, and separate circuit means for energizing said motor upon closure of the contacts of said relay, whereby said jaw portion is moved in accordance with the time duration of signals in said circuit.

References Cited in the file of this patent

UNITED STATES PATENTS

2,270,142	Robinson	Jan. 13, 1942
2,307,296	Peyton	Jan. 5, 1943
2,558,490	Koci	June 26, 1951
2,603,912	Gruber	July 22, 1952