United States Patent [19]

Pandorf et al.

[11] **Patent Number: Des. 281,745**

[45] **Date of Patent: ** Dec. 17, 1985**

[54] **CRIB**

[76] Inventors: **Wayne Pandorf,** 7 Baywood Dr., Ormond Beach, Fla. 32074; **Warren Pandorf,** 6131 NW. 30th Ter., Gainesville, Fla. 32601

[**] Term: **14 Years**

[21] Appl. No.: **504,408**

[22] Filed: **Jun. 15, 1983**

[52] **U.S. Cl.** **D6/390;** D6/331

[58] **Field of Search** ..... D6/331, 390, 391; 5/93 R, 97, 98 R, 99 C

[56] **References Cited**

U.S. PATENT DOCUMENTS

D. 158,030	4/1950	Wagner	D6/391
D. 186,358	10/1959	Fulton	D6/331
D. 229,386	11/1973	Juhlin	D6/300
D. 244,890	7/1977	Adams	D6/331
D. 257,299	10/1980	Cone	D6/331

Primary Examiner—Bruce W. Dunkins

[57] **CLAIM**

The ornamental design for a crib, as shown and described.

DESCRIPTION

FIG. **1** is a perspective view of a crib showing our new design;
FIG. **2** is a top plan view thereof;
FIG. **3** is a view of a longside thereof;
FIG. **4** is a bottom view thereof;
FIG. **5** is a view of a shortside thereof; and
FIG. **6** is a perspective view with removable top shown.
The side and end of the crib not shown are like the respective side and end shown.

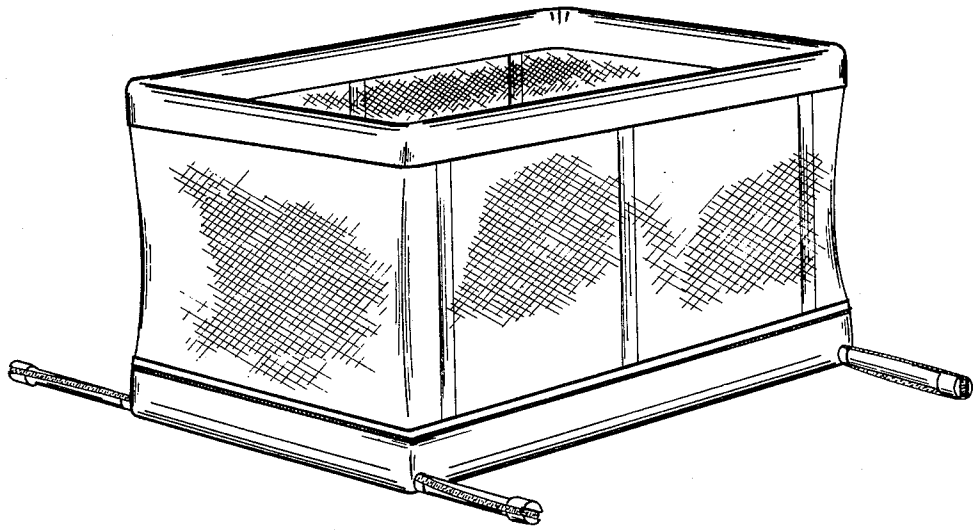

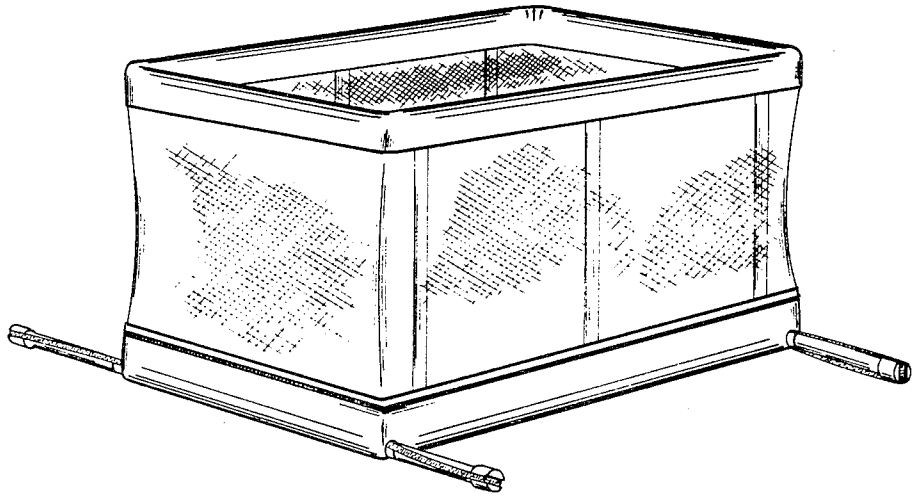

FIGURE 1

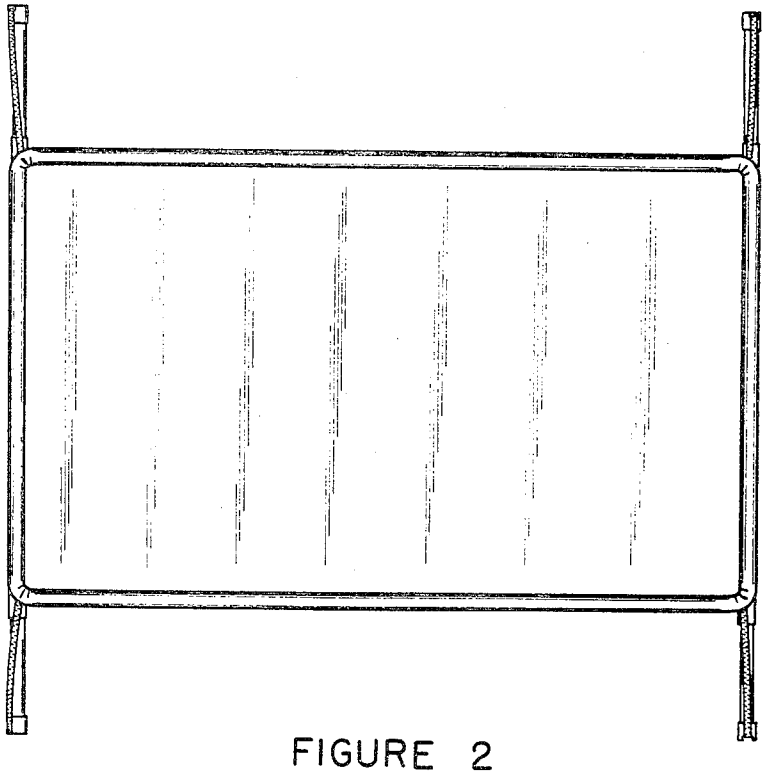

FIGURE 2

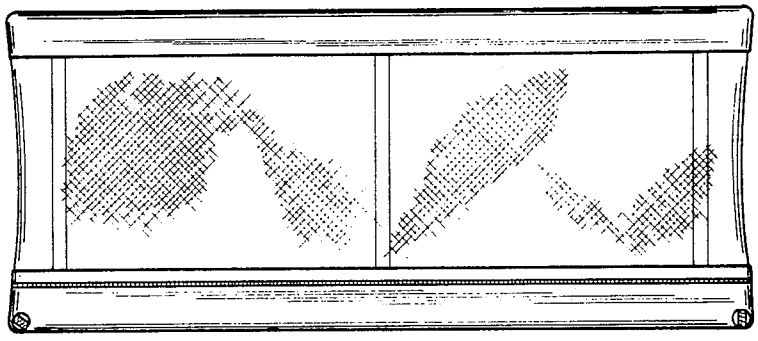

FIGURE 3

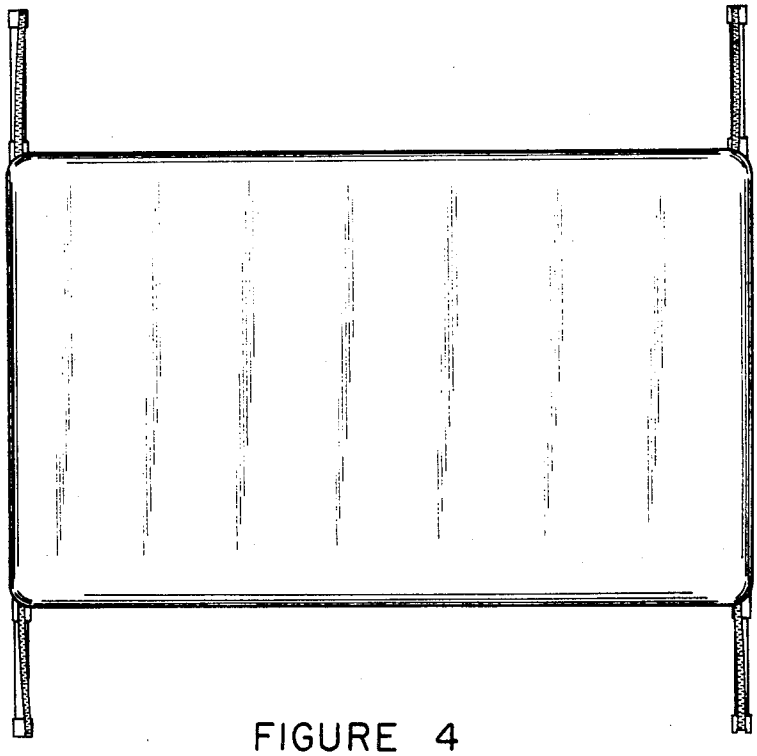

FIGURE 4

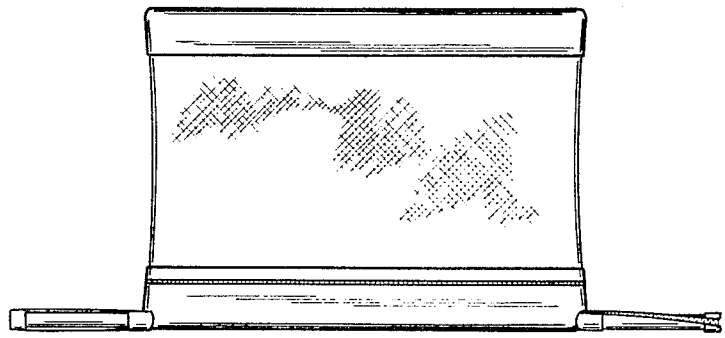

FIGURE 5

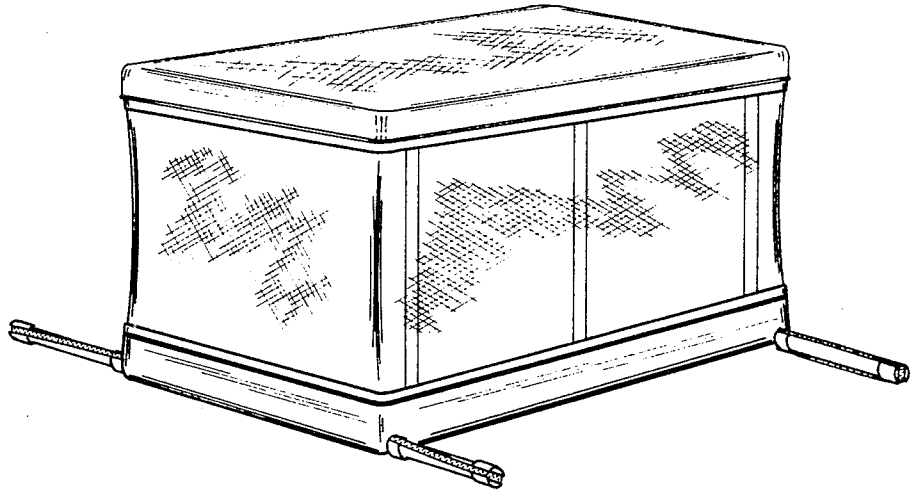

FIGURE 6