Sept. 11, 1934. H. F. BUCKEL 1,972,917

FUME HOOD

Filed Feb. 2, 1932

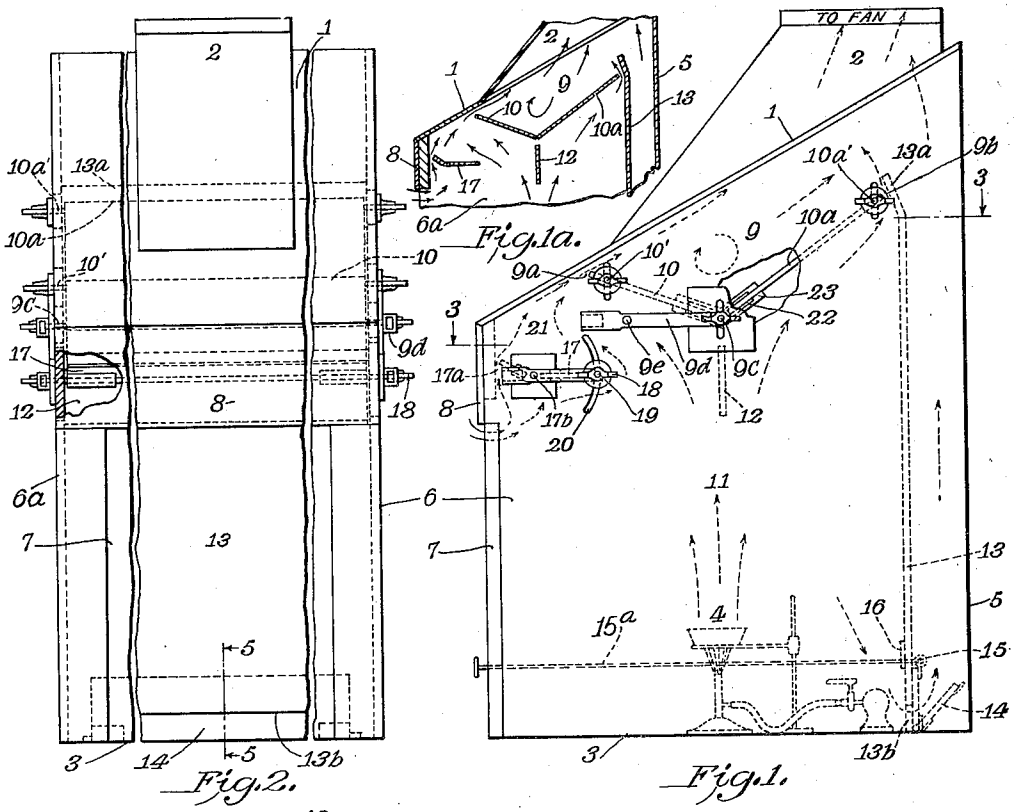

Fig.2. Fig.1.

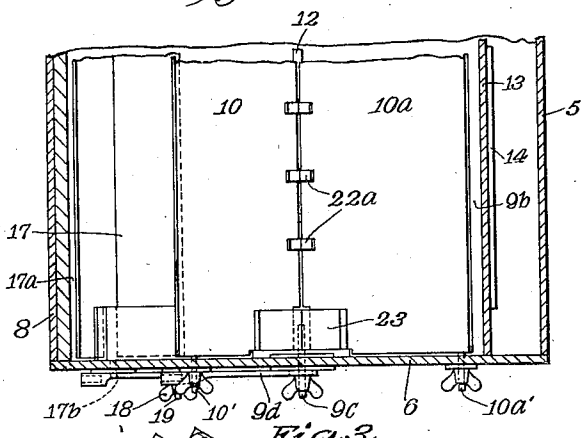

Fig.3.

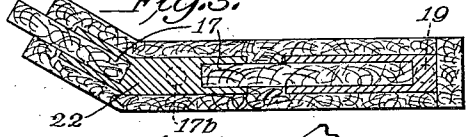

Fig.4.

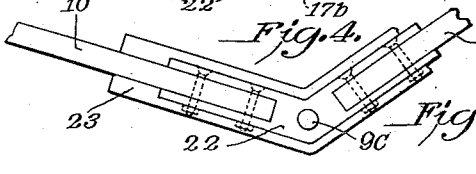

Fig.7.

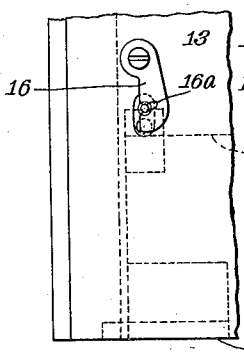

Fig.6.

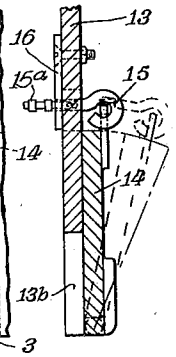

Fig.5.

Inventor
HAROLD F. BUCKEL.

By George B. Willcox
Attorney

Patented Sept. 11, 1934 1,972,917

UNITED STATES PATENT OFFICE

1,972,917

FUME HOOD

Harold F. Buckel, Muskegon, Mich.

Application February 2, 1932, Serial No. 590,478

9 Claims. (Cl. 98—115)

This invention relates to improvements in fume hoods for laboratory or other uses in which fumes, along with a quantity of room air, are initially drawn into a plenum chamber located underneath the sloping roof of the hood and hence through a flue to waste.

In known fume hoods the plenum chamber has been equipped with sliding dampers in its bottom by which the operator, if he reached into the work chamber of the hood, could regulate the rate of fume and air flow from the work chamber through the front and back apertures respectively of the plenum chamber, but that mode of adjustment was inconvenient and sometimes dangerous.

Air velocity through the doorway of the hood has usually been figured in prior devices at forty five lineal feet per minute. This was necessary to assure removing all of the fumes and vapor. Nearly one half of this air had to go into the plenum chamber through the front aperture in order to prevent the fumes from rising up through the work chamber to the bottom of the plenum chamber where they spread out umbrella shape in all directions. These rising gases sometimes traveled at two hundred fifty feet per minute. To prevent this spread from getting out into the room, at least one half of the air drawn into the apparatus had to go into the plenum chamber through the front opening, otherwise some of the fumes would puff out from under the lintel of the doorway. With my invention only one half the amount of air formerly required is now needed to prevent the gases puffing out as compared with the amount of air required for a hood of the earlier type. Less warm air is removed from the room, consequently less heat is required to warm the laboratory, and fuel for heating is saved.

My present invention relates to new and useful features of the bottom plate members of the plenum chamber, including novel means for adjusting and controlling the rate of flow into the front and rear inlet passageways of the said chamber; to a novel auxiliary baffle and damper arrangement designed to afford easy adjustment from the outside and to effectually prevent any harmful tendency for the fumes at the top of the hood to accumulate behind the lintel of the front doorway and choke and puff out through the open front of the hood, under all conditions of ordinary use.

The invention is designed to simplify the construction of previous fume hoods, to afford a maximum of strength and stability while facilitating the manufacture and assemblage of the parts with consequent economy in the commercial production of the article. To this end I have devised and invented the fume hood which is illustrated in the accompanying drawing hereafter described in detail, my invention residing, first, in the construction and arrangement of the elements constituting the bottom of the plenum chamber, so as to utilize the bottom of the chamber as a means for adjusting the gas flow through the plenum chamber; second, a baffle structure constructed to prevent exposure of metallic parts to corrosion; third, in novel auxiliary adjustable means that shall prevent puffing out at the front of the hood; fourth, in partition means that shall divide the ascending column of fumes into two divergent streams, one flowing upwardly into the forward part of the plenum chamber and the other flowing upwardly and rearwardly into the rear part of the plenum chamber, thus the partition prevents fumes that have been drawn to the upper rear section of the hood from getting into the upper front section; fifth, in a new and improved structure of the vertical partition at the rear of the work chamber, and means for actuating the damper at the bottom of the partition.

My improvement enables a smaller fan to be used at less initial cost, and less power is required in the motor that drives the fan; less fan space is required giving a more compact apparatus. Smaller ducts can be used for handling the smaller amount of air and fumes required to be exhausted, and consequently the cost of ducts is reduced.

In the appended claims, I have pointed out the essential elements of my invention, it being understood, however, that the claims are not intended to be limited to the form of the parts illustrated and described further than a limitation to the described form is necessary to distinguish them from the prior art.

In the drawing Fig. 1 is a side view, partly broken away, of my novel fume chamber, the interior parts being indicated by dotted lines and the flow of gas and of air by dotted arrows.

Fig. 1a is a fragmentary section showing diagrammatically the top portion of the hood and the arrangement of the baffles and partitions therein.

Fig. 2 is a front view of the hood shown in Fig. 1 contracted in length by being partly broken away.

Fig. 3 is a fragmentary horizontal sectional view taken on line 3—3 of Fig. 1.

Fig. 4 is an enlarged sectional detail of the auxiliary front damper or baffle.

Fig. 5 is an enlarged sectional view on line 5—5 of Fig. 2, showing a preferred construction of the damper at the bottom of the vertical partition.

Fig. 6 is a face view of the parts shown in Fig. 5.

Fig. 7 is an end view, partly broken away, of a preferred structural connection between the two baffles that constitute the bottom of the plenum chamber.

Like reference numerals indicate like parts in all the figures in the drawing.

The kind of fume hood to which my invention is adapted to be applied consists, as is shown in the drawing, of a cabinet structure provided with a rearwardly and upwardly sloping top wall or roof 1 and a ventilating stack 2 leading from the roof to waste, there being exhaust means, as a ventilating fan (not shown) provided in the stack in known manner.

The cabinet proper consists of a floor 3 on which the experimental or fume-generating apparatus 4 rests, a back wall 5, two side walls 6, 6*a*, a front doorway 7 and a lintel 8 above the front doorway, its upper edge joining the lower part of the sloping roof 1.

Just beneath the roof is a space 9 termed the plenum chamber which is defined by the roof and by deflecting plates 10, 10*a* spaced below the roof, extending from side wall 6 to wall 6*a*, and preferably divergent upwardly, the arrangement being such that the column of fumes 11 ascending in the work chamber is compelled to divide, by means of a vertical divider 12 that spans the hood from side to side beneath the bottom of the plenum chamber, part of the fumes entering the plenum chamber 9 at a front inlet aperture 9*a*, the remainder at a rear aperture 9*b*. The plenum chamber contains a body of fumes and air of sufficient volume to smooth out any irregularities or pulsations produced by the exhaust fan and causes a practically constant suction in the work chamber. The intensity of such suction is regulated by varying the openings 9*a*, 9*b* that are defined by the spacing of the edges of plates 10, 10*a* from adjacent walls of the hood, as roof 1, and the inner wall or partition 13, which will be described later. My invention includes means for accomplishing such adjustment without requiring the operator to reach into the fume hood, that is, the adjustment may be effected solely from outside the hood while fumes are being generated in it. The adjustment may be produced by various mechanical means, but merely for purpose of illustration, and not as a restriction to the scope of the invention, I have shown a preferred adjusting means.

In the form shown, the front deflecting plate 10 and the rear plate 10*a* constituting the bottom of the plenum chamber are rigidly united obliquely to each other and divergent upwardly. The bottom thus formed can be raised and lowered to adjust the size of the front and rear inlet apertures 9*a*, 9*b*. To permit the plenum chamber bottom to be adjusted by means that can be worked from outside the hood, I prefer to provide three slots in each side wall 6, 6*a* of the cabinet. Through each slot projects a threaded guide pin, there being one pin 10′, 10*a*′, on each end of each plate and one on each end of the junction of the two plates, as shown at 9*c* in Figs. 1 and 7. Fasteners, such as wing nuts and washers, are used for clamping the plates 10, 10*a* to the walls of the cabinet. When the wing nuts are loosened the desired adjustment of apertures 9*a*, 9*b* is made by moving both plates 10, 10*a*. This may be conveniently done by means of an adjusting lever 9*d* pivoted at 9*e* to the side wall of the cabinet, the pin 9*c* projecting into the end of the lever.

An upright partition 13 is, as usual, spaced from the back wall 5 and extends up to the plenum chamber, the vertical flue so defined being in communication at its bottom with the work chamber and at its top with the exhaust stack so as to remove fumes from the lower part of the work chamber. The upper part of the upright partition is bent forward at 13*a* to conform to the plate 10*a* of the plenum chamber in its adjustment. At its bottom the partition 13 has an opening 13*b* controlled by an adjustable damper 14 hinged at its lower edge. The damper passes an amount of air sufficient to carry off gases that are heavier than air.

The preferred means for adjusting damper 14 is illustrated in Figs. 5 and 6, there being an eye 15 loosely connected to the upper or opening edge of the damper, the shank of the eye passing through a hole in the partition 13 and connected to an adjusting push-rod 15*a* extending forwardly to a convenient place within the reach of the operator. A latch 16 is pivoted to the partition and shaped to present an eccentric slot 16*a* to engage the adjusting rod by cam action so as to hold the damper in any adjusted position.

A claimed feature of my invention is an auxiliary adjustable member, such as baffle plate or damper 17, located rearwardly of the lintel 8 of doorway 7, slightly above its lower margin and below the deflecting plate 10 of the plenum chamber. The purpose of auxiliary damper 17 is to so direct the main part of a stream of room air entering the doorway under the action of the exhauster in the stack, that it shall flow rearwardly toward and into the front uprising stream of fumes, thus exerting a tendency to keep the fume stream against divider 12, thereby preventing puffing out through the doorway. Moreover, auxiliary damper 17 permits a relatively small and controllable part of the incoming stream of room air to pass through opening 17*a* adjacent the lintel 8, up the back wall of the lintel and thence along the under side of the roof 1 of the hood into the plenum chamber. This thin stream of room air there mingles with the front ascending stream of fumes and assists in directing those fumes into the plenum chamber. The incoming room air is thus divided by damper 17 into two air curtains that operate to keep the fumes inside the hood and lead them to the stack. To tiltingly adjust damper 17, which is mounted on fixed pivots 17*b* carried by the side walls 6, 6*a* of the hood, wing nuts 18 are provided on threaded pins 19 that project from the ends of the damper through arcuate slots 20 in the side wall. Simultaneous adjustment can then be made of the amount of air taken through opening 17*a* back of lintel 8 and thence up under the hood, also of the amount of room air taken horizontally into the work chamber to counteract any tendency for the fumes to puff out under the lintel.

The auxiliary damper 17 located as described comprises in effect the bottom of an introductory or intermediate chamber 21 in advance of the plenum chamber. Through this introductory chamber must pass the rising front portion of the main column of fumes and also the air stream that is taken in through the upper part of the doorway, before they can enter the front inlet

aperture 9a of the plenum chamber. The lintel 8, roof 1, and front deflecting plate 10 of the plenum chamber bottom constitute the other walls that, together with damper 17, define the introductory chamber 21. The purpose of this chamber is to further minimize pulsation of the gases and prevent puffing out.

The dampers and partitions as shown in Figs. 1, 2, 3, 4 and 7 may be made of asbestos slabs or plates that are preferably mounted in clefts formed in the flanges of obtuse angle member 22, 22a. The plates are secured to members 22, 22a by bolts, and to prevent corrosion those members and their bolts are covered with a protective layer 23 of asbestos or the like.

With the baffle and damper arrangement of my invention the fume hood will automatically separate the ascending column of fumes into two parts, drawing one part rearwardly into the plenum chamber and drawing the relatively small residual part into the forward end of the same chamber. The residual part of the fumes is entrained with a small, but steady flow of room air into the introductory chamber and this incoming room air is, by means of auxiliary baffle 17, converted into a flowing air curtain that prevents fumes from puffing out.

Having thus described my invention, what I claim and desire to protect by Letters Patent is:

1. In combination, a walled fume hood including a plenum chamber having a bottom comprising plates oblique and divergent upwardly, their edges spaced from the walls of the hood, adjusting means adapted to move said plates simultaneously toward or away from the walls of said hood, said adjusting means operable from outside the hood, an upright partition spaced from the rear wall of the hood, the upper end of said partition inclined toward and spaced from the rear upper edge of the bottom of said plenum chamber, the said partition having an opening at its lower end, a hinged damper at said opening and actuating means therefor operable from outside the hood, latch means releasably securing said damper, a vertical divider plate below the plenum chamber, an auxiliary damper forward of the plenum chamber and in front of the divider plate, having its forward edge spaced from the front wall of the hood to present an air passage, and adjusting means for said auxiliary damper.

2. In a fume hood including a plenum chamber, the bottom of said chamber comprising two deflecting plates oblique to each other, divergent upwardly and extending across the hood from side to side and a vertical divider spanning the hood from side to side beneath said plenum chamber bottom, and an auxiliary baffle means positioned lower than the plenum chamber and in front of the divider plate, the bottom of the plenum chamber and the auxiliary baffle means defining an introductory chamber.

3. In a fume hood including an upwardly and rearwardly inclined roof, a plenum chamber, having a bottom comprising two deflecting plates oblique to each other, divergent upwardly, and extending from side to side across the hood, a doorway having a downwardly projecting lintel, an auxiliary damper member located beneath the roof back of the lintel and in front of and beneath the plenum chamber, said damper member, together with the bottom of the plenum chamber, defining an introductory chamber, the lintel and the forward edge of said damper member spaced apart and presenting an opening for intake of air.

4. In a fume hood including a doorway, a lintel and a plenum chamber, having a bottom comprising two deflecting plates oblique to each other, divergent upwardly, and extending from side to side across the hood, a damper located in front of the plenum chamber and spaced from the lintel, said damper being substantially horizontal, and damper-actuating means located outside the hood and adapted for adjustment to vary the spaced relationship of said damper and lintel.

5. In a fume hood including a plenum chamber having inclined top and rear walls, a bottom for said chamber comprising plates fixedly joined together oblique to each other and upwardly divergent and having their common edge movably mounted on the hood, and means operative from outside the hood adapted to actuate said plates simultaneously so as to move their outer edges into various adjusted positions in relation to said top and rear walls and to thereby alter simultaneously the front and rear fume passageways into said plenum chamber.

6. In a fume hood including a plenum chamber, a movable bottom member for said chamber, said bottom member spanning the hood from side to side, and comprising two divergent baffles fixed together at their common lower edge, adjusting devices operatively connected to said baffle members and adapted to variously position the same by simultaneous movement relatively to the top and rear walls of the hood.

7. In a fume hood having a plenum chamber and inlet apertures therefor, a bottom for said chamber comprising upwardly divergent deflecting plates, a mounting for said plates comprising an angle member having cleft flanges receiving adjoining edges of said plates, and actuating means operatively connected to said angle member and adapted to move the same to various adjusted positions whereby to effect corresponding adjustments of said plates for varying the size of said inlet apertures.

8. A fume hood including a plenum chamber, a bottom member for said plenum chamber consisting of two deflecting plates positioned oblique to each other and extending divergent upwardly, the upper end of said plates being adjustably spaced from the top wall of the hood to provide an inlet aperture to said plenum chamber, the upper end of the other plate being adjustably spaced from a rear wall of the hood, and means for effecting such adjustments simultaneously.

9. In a fume hood having side walls formed with slots, an auxiliary baffle, a plenum chamber having a movable bottom, guide pins fixed to said baffle and guide pins on the bottom of the plenum chamber, said pins projecting through said slots, and fastening means adapted to secure said pins at various locations in said slots.

HAROLD F. BUCKEL.