(12) INTERNATIONAL APPLICATION PUBLISHED UNDER THE PATENT COOPERATION TREATY (PCT)

(19) World Intellectual Property Organization
International Bureau

(43) International Publication Date
01 October 2020 (01.10.2020)

WIPO | PCT

(10) International Publication Number
WO 2020/196237 A1

(51) International Patent Classification:
H04W 72/04 (2009.01) *H04W 28/06* (2009.01)
H04W 28/04 (2009.01)

(21) International Application Number:
PCT/JP2020/012243

(22) International Filing Date:
19 March 2020 (19.03.2020)

(25) Filing Language: English

(26) Publication Language: English

(30) Priority Data:
62/823,238 25 March 2019 (25.03.2019) US

(71) Applicants: **SHARP KABUSHIKI KAISHA** [JP/JP]; 1, Takumi-cho, Sakai-ku, Sakai City, Osaka, 5908522 (JP). **FG INNOVATION COMPANY LIMITED** [CN/CN]; Flat 2623, 26/F Tuen Mun Central Square, 22 Hoi Wing Road, Tuen Mun, New Territories, Hong Kong, (CN).

(72) Inventors: **AIBA, Tatsushi**. **KOWALSKI, John Michael**. **YOKOMAKURA, Kazunari**.

(74) Agent: **HARAKENZO WORLD PATENT & TRADEMARK**; Daiwa Minamimorimachi Building, 2-6, Tenjinbashi 2-chome Kita, Kita-ku, Osaka-shi, Osaka, 5300041 (JP).

(81) Designated States *(unless otherwise indicated, for every kind of national protection available)*: AE, AG, AL, AM, AO, AT, AU, AZ, BA, BB, BG, BH, BN, BR, BW, BY, BZ, CA, CH, CL, CN, CO, CR, CU, CZ, DE, DJ, DK, DM, DO, DZ, EC, EE, EG, ES, FI, GB, GD, GE, GH, GM, GT, HN, HR, HU, ID, IL, IN, IR, IS, JO, JP, KE, KG, KH, KN, KP, KR, KW, KZ, LA, LC, LK, LR, LS, LU, LY, MA, MD, ME, MG, MK, MN, MW, MX, MY, MZ, NA, NG, NI, NO, NZ, OM, PA, PE, PG, PH, PL, PT, QA, RO, RS, RU, RW, SA, SC, SD, SE, SG, SK, SL, ST, SV, SY, TH, TJ, TM, TN, TR, TT, TZ, UA, UG, US, UZ, VC, VN, WS, ZA, ZM, ZW.

(54) **Title:** USER EQUIPMENTS, BASE STATIONS AND METHODS FOR CONFIGURATION FOR PRIORITY INDICATION

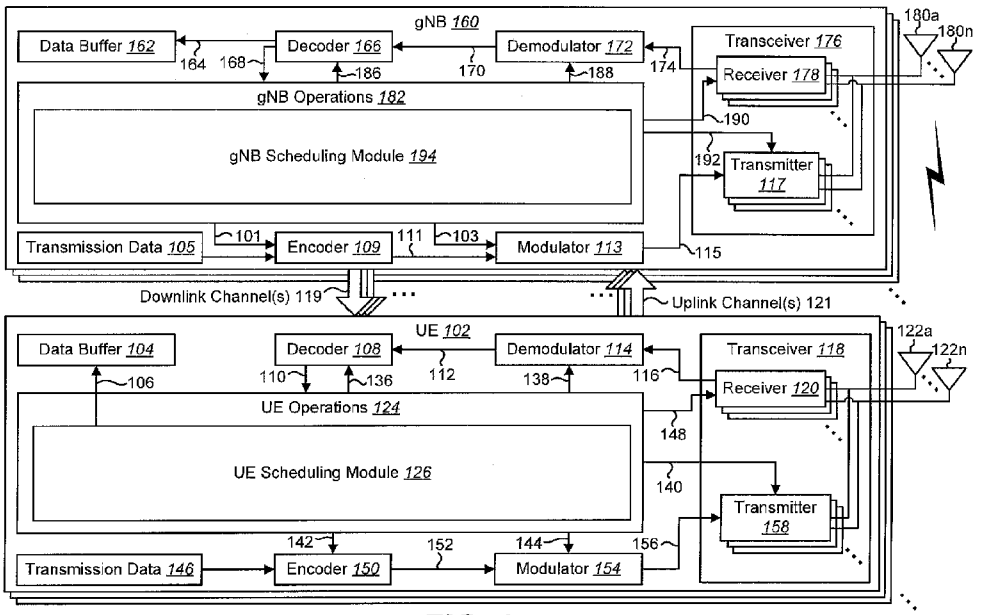

FIG. 1

(57) **Abstract:** A user equipment (UE) is described. The UE includes receiving circuitry configured to receive a radio resource control (RRC) message including information used for configuring that a priority indication is present in a downlink control information (DCI) format. The DCI format is used for scheduling of a physical downlink shared channel (PDSCH). The priority indication is used for indicating a priority for a hybrid automatic repeat request-acknowledgment (HARQ-ACK) transmission for the PDSCH. The UE also includes transmitting circuitry configured to perform, based on the priority, the HARQ-ACK transmission for the PDSCH. The information is configured for each control resource sets (CORESETs) except for a control resource set (CORESET) with an index "0".

WO 2020/196237 A1

[Continued on next page]

(84) **Designated States** *(unless otherwise indicated, for every kind of regional protection available)*: ARIPO (BW, GH, GM, KE, LR, LS, MW, MZ, NA, RW, SD, SL, ST, SZ, TZ, UG, ZM, ZW), Eurasian (AM, AZ, BY, KG, KZ, RU, TJ, TM), European (AL, AT, BE, BG, CH, CY, CZ, DE, DK, EE, ES, FI, FR, GB, GR, HR, HU, IE, IS, IT, LT, LU, LV, MC, MK, MT, NL, NO, PL, PT, RO, RS, SE, SI, SK, SM, TR), OAPI (BF, BJ, CF, CG, CI, CM, GA, GN, GQ, GW, KM, ML, MR, NE, SN, TD, TG).

Declarations under Rule 4.17:

— *as to applicant's entitlement to apply for and be granted a patent (Rule 4.17(ii))*

— *as to the applicant's entitlement to claim the priority of the earlier application (Rule 4.17(iii))*

Published:

— *with international search report (Art. 21(3))*

Description

Title of Invention: USER EQUIPMENTS, BASE STATIONS AND METHODS FOR CONFIGURATION FOR PRIORITY INDICATION

Technical Field

[0001] The present disclosure relates generally to communication systems. More specifically, the present disclosure relates to new signaling, procedures, user equipment (UE) and base stations for configuration for a priority indication for downlink (DL) and/or uplink (UL) transmissions.

Background Art

[0002] Wireless communication devices have become smaller and more powerful in order to meet consumer needs and to improve portability and convenience. Consumers have become dependent upon wireless communication devices and have come to expect reliable service, expanded areas of coverage and increased functionality. A wireless communication system may provide communication for a number of wireless communication devices, each of which may be serviced by a base station. A base station may be a device that communicates with wireless communication devices.

[0003] As wireless communication devices have advanced, improvements in communication capacity, speed, flexibility and/or efficiency have been sought. However, improving communication capacity, speed, flexibility and/or efficiency may present certain problems.

[0004] For example, wireless communication devices may communicate with one or more devices using a communication structure. However, the communication structure used may only offer limited flexibility and/or efficiency. As illustrated by this discussion, systems and methods that improve communication flexibility and/or efficiency may be beneficial.

Summary of Invention

[0005] In one example, a user equipment comprising: receiving circuitry configured to receive a radio resource control (RRC) message including information used for configuring that a priority indication is present in a downlink control information (DCI) format, the DCI format being used for scheduling of a physical downlink shared channel (PDSCH), the priority indication being used for indicating a priority for a hybrid automatic repeat request-acknowledgment (HARQ-ACK) transmission for the PDSCH; and transmitting circuitry configured to perform, based on the priority, the HARQ-ACK transmission for the PDSCH, wherein the information is configured for each control resource sets (CORESETs) except for a control resource set (CORESET)

with an index "0".

[0006] In one example, a base station apparatus comprising: transmitting circuitry configured to transmit a radio resource control (RRC) message including information used for configuring that a priority indication is present in a downlink control information (DCI) format, the DCI format being used for scheduling of a physical downlink shared channel (PDSCH), the priority indication being used for indicating a priority for a hybrid automatic repeat request-acknowledgment (HARQ-ACK) transmission for the PDSCH; and receiving circuitry configured to perform, based on the priority, the HARQ-ACK reception for the PDSCH, wherein the information is configured for each control resource sets (CORESETs) except for a control resource set (CORESET) with an index "0".

[0007] In one example, a communication method of a user equipment comprising: receiving a radio resource control (RRC) message including information used for configuring that a priority indication is present in a downlink control information (DCI) format, the DCI format being used for scheduling of a physical downlink shared channel (PDSCH), the priority indication being used for indicating a priority for a hybrid automatic repeat request-acknowledgment (HARQ-ACK) transmission for the PDSCH; and performing, based on the priority, the HARQ-ACK transmission for the PDSCH, wherein the information is configured for each control resource sets (CORESETs) except for a control resource set (CORESET) with an index "0".

[0008] In one example, a communication method of a base station apparatus comprising: transmitting a radio resource control (RRC) message including information used for configuring that a priority indication is present in a downlink control information (DCI) format, the DCI format being used for scheduling of a physical downlink shared channel (PDSCH), the priority indication being used for indicating a priority for a hybrid automatic repeat request-acknowledgment (HARQ-ACK) transmission for the PDSCH; and performing, based on the priority, the HARQ-ACK reception for the PDSCH, wherein the information is configured for each control resource sets (CORESETs) except for a control resource set (CORESET) with an index "0".

Brief Description of Drawings

[0009] [fig.1]Figure 1 is a block diagram illustrating one implementation of one or more base station apparatuses (gNBs) and one or more user equipments (UEs) in which systems and methods for signaling may be implemented.

[fig.2]Figure 2 shows examples of multiple numerologies.

[fig.3]Figure 3 is a diagram illustrating one example of a resource grid and resource block.

[fig.4]Figure 4 shows examples of resource regions.

[fig.5]Figure 5 illustrates an example of a prioritization for physical downlink shared channel (PDSCH) reception.

[fig.6]Figure 6 illustrates an example of a prioritization for hybrid automatic repeat request-acknowledgment (HARQ-ACK) transmission for PDSCH.

[fig.7]Figure 7 illustrates an example of a prioritization for PUSCH transmission.

[fig.8]Figure 8 illustrates various components that may be utilized in a UE.

[fig.9]Figure 9 illustrates various components that may be utilized in a gNB.

[fig.10]Figure 10 is a block diagram illustrating one implementation of a UE in which one or more of the systems and/or methods described herein may be implemented.

[fig.11]Figure 11 is a block diagram illustrating one implementation of a gNB in which one or more of the systems and/or methods described herein may be implemented.

[fig.12]Figure 12 is a block diagram illustrating one implementation of a gNB.

[fig.13]Figure 13 is a block diagram illustrating one implementation of a UE.

[fig.14]Figure 14 is a flow diagram illustrating a communication method by a UE.

[fig.15]Figure 15 is a flow diagram illustrating a communication method by a gNB.

Description of Embodiments

[0010] A user equipment (UE) is described. The UE includes receiving circuitry configured to receive a radio resource control (RRC) message including information used for configuring that a priority indication is present in a downlink control information (DCI) format. The DCI format is used for scheduling of a physical downlink shared channel (PDSCH). The priority indication is used for indicating a priority for a hybrid automatic repeat request-acknowledgment (HARQ-ACK) transmission for the PDSCH. The UE also includes transmitting circuity configured to perform, based on the priority, the HARQ-ACK transmission for the PDSCH. The information is configured for each control resource sets (CORESETs) except for a CORESET with an index “0”.

[0011] A base station apparatus is also described. The base station apparatus includes transmitting circuitry configured to transmit an RRC message including information used for configuring that a priority indication is present in a DCI format. The DCI format is used for scheduling of a PDSCH. The priority indication is used for indicating a priority for a HARQ-ACK transmission for the PDSCH. The base station apparatus also includes receiving circuitry configured to perform, based on the priority, the HARQ-ACK reception for the PDSCH. The information is configured for each CORESETs except for a CORESET with an index “0”.

[0012] A communication method of a UE also described. The communication method includes receiving an RRC message including information used for configuring that a priority indication is present in a DCI format. The DCI format is used for scheduling of

a PDSCH. The priority indication is used for indicating a priority for a HARQ-ACK transmission for the PDSCH. The communication method also includes performing, based on the priority, the HARQ-ACK transmission for the PDSCH. The information is configured for each CORESETs except for a CORESET with an index "0".

[0013] A communication method of a base station apparatus also described. The communication method includes transmitting an RRC message including information used for configuring that a priority indication is present in a DCI format. The DCI format is used for scheduling of a PDSCH. The priority indication is used for indicating a priority for a HARQ-ACK transmission for the PDSCH. The communication method also includes performing, based on the priority, the HARQ-ACK reception for the PDSCH. The information is configured for each CORESETs except for a CORESET with an index "0".

[0014] The 3rd Generation Partnership Project, also referred to as "3GPP," is a collaboration agreement that aims to define globally applicable technical specifications and technical reports for third and fourth generation wireless communication systems. The 3GPP may define specifications for next generation mobile networks, systems and devices.

[0015] 3GPP Long Term Evolution (LTE) is the name given to a project to improve the Universal Mobile Telecommunications System (UMTS) mobile phone or device standard to cope with future requirements. In one aspect, UMTS has been modified to provide support and specification for the Evolved Universal Terrestrial Radio Access (E-UTRA) and Evolved Universal Terrestrial Radio Access Network (E-UTRAN).

[0016] At least some aspects of the systems and methods disclosed herein may be described in relation to the 3GPP LTE, LTE-Advanced (LTE-A) and other standards (e.g., 3GPP Releases 8, 9, 10, 11, 12, 13, 14 and/or 15). However, the scope of the present disclosure should not be limited in this regard. At least some aspects of the systems and methods disclosed herein may be utilized in other types of wireless communication systems.

[0017] A wireless communication device may be an electronic device used to communicate voice and/or data to a base station, which in turn may communicate with a network of devices (e.g., public switched telephone network (PSTN), the Internet, etc.). In describing systems and methods herein, a wireless communication device may alternatively be referred to as a mobile station, a UE, an access terminal, a subscriber station, a mobile terminal, a remote station, a user terminal, a terminal, a subscriber unit, a mobile device, etc. Examples of wireless communication devices include cellular phones, smart phones, personal digital assistants (PDAs), laptop computers, netbooks, e-readers, wireless modems, etc. In 3GPP specifications, a wireless communication device is typically referred to as a UE. However, as the scope of the present disclosure should not be limited to the 3GPP standards, the terms "UE" and "wireless

communication device" may be used interchangeably herein to mean the more general term "wireless communication device." A UE may also be more generally referred to as a terminal device.

[0018] In 3GPP specifications, a base station is typically referred to as a Node B, an evolved Node B (eNB), a home enhanced or evolved Node B (HeNB) or some other similar terminology. As the scope of the disclosure should not be limited to 3GPP standards, the terms "base station," "Node B," "eNB," "gNB" and "HeNB" may be used interchangeably herein to mean the more general term "base station." Furthermore, the term "base station" may be used to denote an access point. An access point may be an electronic device that provides access to a network (e.g., Local Area Network (LAN), the Internet, etc.) for wireless communication devices. The term "communication device" may be used to denote both a wireless communication device and/or a base station. An eNB may also be more generally referred to as a base station device.

[0019] It should be noted that as used herein, a "cell" may be any communication channel that is specified by standardization or regulatory bodies to be used for International Mobile Telecommunications-Advanced (IMT-Advanced) and all of it or a subset of it may be adopted by 3GPP as licensed bands (e.g., frequency bands) to be used for communication between an eNB and a UE. It should also be noted that in E-UTRA and E-UTRAN overall description, as used herein, a "cell" may be defined as "combination of downlink and optionally uplink resources." The linking between the carrier frequency of the downlink resources and the carrier frequency of the uplink resources may be indicated in the system information transmitted on the downlink resources.

[0020] The 5th generation communication systems, dubbed NR (New Radio technologies) by 3GPP, envision the use of time/frequency/space resources to allow for services, such as eMBB (enhanced Mobile Broad-Band) transmission, URLLC (Ultra Reliable and Low Latency Communication) transmission, and eMTC (massive Machine Type Communication) transmission. And, in NR, transmissions for different services may be specified (e.g., configured) for one or more bandwidth parts (BWPs) in a serving cell and/or for one or more serving cells. A user equipment (UE) may receive a downlink signal(s) and/or transmit an uplink signal(s) in the BWP(s) of the serving cell and/or the serving cell(s).

[0021] In order for the services to use the time, frequency, and/or space resources efficiently, it would be useful to be able to efficiently control downlink and/or uplink transmissions. Therefore, a procedure for efficient control of downlink and/or uplink transmissions should be designed. Accordingly, a detailed design of a procedure for downlink and/or uplink transmissions may be beneficial.

[0022] Various examples of the systems and methods disclosed herein are now described with reference to the Figures, where like reference numbers may indicate functionally

similar elements. The systems and methods as generally described and illustrated in the Figures herein could be arranged and designed in a wide variety of different implementations. Thus, the following more detailed description of several implementations, as represented in the Figures, is not intended to limit scope, as claimed, but is merely representative of the systems and methods.

[0023] Figure 1 is a block diagram illustrating one implementation of one or more gNBs 160 and one or more UEs 102 in which systems and methods for signaling may be implemented. The one or more UEs 102 communicate with one or more gNBs 160 using one or more physical antennas 122a-n. For example, a UE 102 transmits electromagnetic signals to the gNB 160 and receives electromagnetic signals from the gNB 160 using the one or more physical antennas 122a-n. The gNB 160 communicates with the UE 102 using one or more physical antennas 180a-n. In some implementations, the term "base station," "eNB," and/or "gNB" may refer to and/or may be replaced by the term "Transmission Reception Point (TRP)." For example, the gNB 160 described in connection with Figure 1 may be a TRP in some implementations.

[0024] The UE 102 and the gNB 160 may use one or more channels and/or one or more signals 119, 121 to communicate with each other. For example, the UE 102 may transmit information or data to the gNB 160 using one or more uplink channels 121. Examples of uplink channels 121 include a physical shared channel (e.g., PUSCH (physical uplink shared channel)) and/or a physical control channel (e.g., PUCCH (physical uplink control channel)), etc. The one or more gNBs 160 may also transmit information or data to the one or more UEs 102 using one or more downlink channels 119, for instance. Examples of downlink channels 119 include a physical shared channel (e.g., PDSCH (physical downlink shared channel) and/or a physical control channel (PDCCH (physical downlink control channel)), etc. Other kinds of channels and/or signals may be used.

[0025] Each of the one or more UEs 102 may include one or more transceivers 118, one or more demodulators 114, one or more decoders 108, one or more encoders 150, one or more modulators 154, a data buffer 104 and a UE operations module 124. For example, one or more reception and/or transmission paths may be implemented in the UE 102. For convenience, only a single transceiver 118, decoder 108, demodulator 114, encoder 150 and modulator 154 are illustrated in the UE 102, though multiple parallel elements (e.g., transceivers 118, decoders 108, demodulators 114, encoders 150 and modulators 154) may be implemented.

[0026] The transceiver 118 may include one or more receivers 120 and one or more transmitters 158. The one or more receivers 120 may receive signals from the gNB 160 using one or more antennas 122a-n. For example, the receiver 120 may receive and downconvert signals to produce one or more received signals 116. The one or more

received signals 116 may be provided to a demodulator 114. The one or more transmitters 158 may transmit signals to the gNB 160 using one or more physical antennas 122a-n. For example, the one or more transmitters 158 may upconvert and transmit one or more modulated signals 156.

[0027] The demodulator 114 may demodulate the one or more received signals 116 to produce one or more demodulated signals 112. The one or more demodulated signals 112 may be provided to the decoder 108. The UE 102 may use the decoder 108 to decode signals. The decoder 108 may produce decoded signals 110, which may include a UE-decoded signal 106 (also referred to as a first UE-decoded signal 106). For example, the first UE-decoded signal 106 may comprise received payload data, which may be stored in a data buffer 104. Another signal included in the decoded signals 110 (also referred to as a second UE-decoded signal 110) may comprise overhead data and/or control data. For example, the second UE decoded signal 110 may provide data that may be used by the UE operations module 124 to perform one or more operations.

[0028] In general, the UE operations module 124 may enable the UE 102 to communicate with the one or more gNBs 160. The UE operations module 124 may include one or more of a UE scheduling module 126.

[0029] The UE scheduling module 126 may perform downlink reception(s) and uplink transmission(s). The downlink reception(s) include reception of data, reception of downlink control information, and/or reception of downlink reference signals. Also, the uplink transmissions include transmission of data, transmission of uplink control information, and/or transmission of uplink reference signals.

[0030] In a radio communication system, physical channels (uplink physical channels and/or downlink physical channels) may be defined. The physical channels (uplink physical channels and/or downlink physical channels) may be used for transmitting information that is delivered from a higher layer.

[0031] For example, in uplink, a PRACH (Physical Random Access Channel) may be defined. In some approaches, the PRACH (e.g., the random access procedure) may be used for an initial access connection establishment procedure, a handover procedure, a connection re-establishment, a timing adjustment (e.g., a synchronization for an uplink transmission, for UL synchronization) and/or for requesting an uplink shared channel (UL-SCH) resource (e.g., the uplink physical shared channel (PSCH) (e.g., PUSCH) resource).

[0032] In another example, a physical uplink control channel (PUCCH) may be defined. The PUCCH may be used for transmitting uplink control information (UCI). The UCI may include hybrid automatic repeat request-acknowledgement (HARQ-ACK), channel state information (CSI) and/or a scheduling request (SR). The HARQ-ACK is used for indicating a positive acknowledgement (ACK) or a negative acknowledgment (NACK)

for downlink data (e.g., Transport block(s), Medium Access Control Protocol Data Unit (MAC PDU) and/or Downlink Shared Channel (DL-SCH)). The CSI is used for indicating state of downlink channel (e.g., a downlink signal(s)). Also, the SR is used for requesting resources of uplink data (e.g., Transport block(s), MAC PDU and/or Uplink Shared Channel (UL-SCH)).

[0033] Here, the DL-SCH and/or the UL-SCH may be a transport channel that is used in the MAC layer. Also, a transport block(s) (TB(s)) and/or a MAC PDU may be defined as a unit(s) of the transport channel used in the MAC layer. The transport block may be defined as a unit of data delivered from the MAC layer to the physical layer. The MAC layer may deliver the transport block to the physical layer (e.g., the MAC layer delivers the data as the transport block to the physical layer). In the physical layer, the transport block may be mapped to one or more codewords.

[0034] In downlink, a physical downlink control channel (PDCCH) may be defined. The PDCCH may be used for transmitting downlink control information (DCI). Here, more than one DCI formats may be defined for DCI transmission on the PDCCH. Namely, fields may be defined in the DCI format(s), and the fields are mapped to the information bits (e.g., DCI bits).

[0035] For example, a DCI format 1_0 that is used for scheduling of the PDSCH in the cell may be defined as the DCI format for the downlink. Also, as described herein one or more Radio Network Temporary Identifiers (e.g., the Cell RNTI(s) (C-RNTI(s)), the Configured Scheduling RNTI(s) (CS-RNTI(s)), the System Information RNTI(s) (SI-RNTI(s)), the Random Access RNTI(s) (RA-RNTI(s)), and/or a first RNTI may be used to transmit the DCI format 1_0. Also, the DCI format 1_0 may be monitored (e.g., transmitted, mapped) in the Common Search Space (CSS) and/or the UE Specific Search space (USS). Alternatively, the DCI format 1_0 may be monitored (e.g., transmitted, mapped) in the CSS only.

[0036] For example, the DCI included in the DCI format 1_0 may be a frequency domain resource assignment (e.g., for the PDSCH). Additionally or alternatively, the DCI included in the DCI format 1_0 may be a time domain resource assignment (e.g., for the PDSCH). Additionally or alternatively, the DCI included in the DCI format 1_0 may be a modulation and coding scheme (e.g., for the PDSCH). Additionally or alternatively, or alternatively, the DCI included in the DCI format 1_0 may be a new data indicator. Additionally or alternatively, the DCI included in the DCI format 1_0 may be a TPC (e.g., Transmission Power Control) command for scheduled PUCCH. Additionally or alternatively, the DCI included in the DCI format 1_0 may be a PUCCH resource indicator. Additionally or alternatively, the DCI included in the DCI format 1_0 may be a PDSCH-to-HARQ feedback timing indicator. Additionally or alternatively, the DCI included in the DCI format 1_0 may be a priority indication (e.g., for

the PDSCH transmission and/or the PDSCH reception). Additionally or alternatively, the DCI included in the DCI format 1_0 may be the priority indication (e.g., for the HARQ-ACK transmission for the PDSCH and/or the HARQ-ACK reception for the PDSCH).

[0037] Here, the priority indication may be used for indicating a priority (e.g., 2-bit information, 00: the lowest priority, 01: the lower priority, 10: the higher priority, and/or 11: the highest priority) for the PDSCH transmission and/or the PDSCH reception. For example, in a case that the UE 102 detects (e.g., decode, receive) the DCI format for the downlink including the priority indication, the UE 102 may identify the PDSCH transmission and/or the PDSCH reception is prioritized (e.g., the PDSCH transmission and/or the PDSCH reception has the higher priority, the highest priority, the lower priority, and/or the lowest priority).

[0038] Additionally or alternatively, the priority indication may be used for indicating a priority (e.g., 2-bit information, 00: the lowest priority, 01: the lower priority, 10: the higher priority, and/or 11: the highest priority) for the HARQ-ACK transmission for the PDSCH and/or the HARQ-ACK reception for the PDSCH. For example, in a case that the UE 102 detects the DCI format for the downlink including the priority indication, the UE 102 may identify the HARQ-ACK transmission for the PDSCH and/or the HARQ-ACK reception for the PDSCH is prioritized (e.g., the HARQ-ACK transmission for the PDSCH and/or the HARQ-ACK reception for the PDSCH has the higher priority, the highest priority, the lower priority, and/or the lowest priority).

[0039] Additionally or alternatively, a DCI format 1_1 that is used for scheduling of the PDSCH in the cell may be defined as the DCI format for the downlink. Additionally or alternatively, the C-RNTI, the CS-RNTI, and/or the first RNTI may be used to transmit the DCI format 1_1. Additionally or alternatively, the DCI format 1_1 may be monitored (e.g., transmitted and/or mapped) in the CSS and/or the USS.

[0040] For example, the DCI included in the DCI format 1_1 may be a BWP indicator (e.g., for the PDSCH). Additionally or alternatively, the DCI included in the DCI format 1_1 may be frequency domain resource assignment (e.g., for the PDSCH). Additionally or alternatively, the DCI included in the DCI format 1_1 may be a time domain resource assignment (e.g., for the PDSCH). Additionally or alternatively, the DCI included in the DCI format 1_1 may be a modulation and coding scheme (e.g., for the PDSCH). Additionally or alternatively, the DCI included in the DCI format 1_1 may be a new data indicator. Additionally or alternatively, the DCI included in the DCI format 1_1 may be a TPC command for scheduled PUCCH. Additionally or alternatively, the DCI included in the DCI format 1_1 may be a CSI request that is used for requesting (e.g., triggering) transmission of the CSI (e.g., CSI reporting (e.g., aperiodic CSI reporting)). Additionally or alternatively, the DCI included in the DCI format 1_1 may be a

PUCCH resource indicator. Additionally or alternatively, the DCI included in the DCI format 1_1 may be a PDSCH-to-HARQ feedback timing indicator. Additionally or alternatively, the DCI included in the DCI format 1_1 may be the priority indication (e.g., for the PDSCH transmission and/or the PDSCH reception). Additionally or alternatively, the DCI included in the DCI format 1_1 may be the priority indication (e.g., for the HARQ-ACK transmission for the PDSCH and/or the HARQ-ACK reception for the PDSCH).

[0041] Additionally or alternatively, a DCI format 1_X that is used for scheduling of the PDSCH in the cell may be defined as the DCI format for the downlink. Additionally or alternatively, the C-RNTI, the CS-RNTI, and/or the first RNTI may be used to transmit the DCI format 1_X. Additionally or alternatively, the DCI format 1_X may be monitored (e.g., transmitted and/or mapped) in the CSS and/or the USS.

[0042] For example, the DCI included in the DCI format 1_X may be a BWP indicator (e.g., for the PDSCH). Additionally or alternatively, the DCI included in the DCI format 1_X may be frequency domain resource assignment (e.g., for the PDSCH). Additionally or alternatively, the DCI included in the DCI format 1_X may be a time domain resource assignment (e.g., for the PDSCH). Additionally or alternatively, the DCI included in the DCI format 1_X may be a modulation and coding scheme (e.g., for the PDSCH). Additionally or alternatively, the DCI included in the DCI format 1_X may be a new data indicator. Additionally or alternatively, the DCI included in the DCI format 1_X may be a TPC command for scheduled PUCCH. Additionally or alternatively, the DCI included in the DCI format 1_X may be a CSI request that is used for requesting (e.g., triggering) transmission of the CSI (e.g., CSI reporting (e.g., aperiodic CSI reporting)). Additionally or alternatively, the DCI included in the DCI format 1_X may be a PUCCH resource indicator. Additionally or alternatively, the DCI included in the DCI format 1_X may be a PDSCH-to-HARQ feedback timing indicator. Additionally or alternatively, the DCI included in the DCI format 1_X may be the priority indication (e.g., for the PDSCH transmission and/or the PDSCH reception). Additionally or alternatively, the DCI included in the DCI format 1_X may be the priority indication (e.g., for the HARQ-ACK transmission for the PDSCH and/or the HARQ-ACK reception for the PDSCH).

[0043] Here, the DCI format 1_X (and/or the DCI format 1_X including the priority indication) may be used for indicating a priority (e.g., the higher priority, the highest priority, the lower priority, and/or the lowest priority) for the PDSCH transmission and/or the PDSCH reception. For example, in a case that the UE 102 detects the DCI format 1_X (and/or the DCI format 1_X including the priority indication), the UE 102 may identify the PDSCH transmission and/or the PDSCH reception is prioritized (e.g., the PDSCH transmission and/or the PDSCH reception has the higher priority, the

highest priority, the lower priority, and/or the lowest priority).

[0044] Additionally or alternatively, the DCI format 1_X (and/or the DCI format 1_X including the priority indication, and/or the DCI format 1_X with the CRC scrambled by the first RNTI, and/or the DCI format 1_X with the CRC scrambled by the first RNTI including the priority indication) may be used for indicating a priority (e.g., the higher priority, the highest priority, the lower priority, and/or the lowest priority) for the HARQ-ACK transmission for the PDSCH and/or the HARQ-ACK reception for the PDSCH. For example, in a case that the UE 102 detects the DCI format 1_X (and/or the DCI format 1_X including the priority indication, and/or the DCI format 1_X with the CRC scrambled by the first RNTI, and/or the DCI format 1_X with the CRC scrambled by the first RNTI including the priority indication), the UE 102 may identify the HARQ-ACK transmission for the PDSCH and/or the HARQ-ACK reception for the PDSCH is prioritized (e.g., the HARQ-ACK transmission for the PDSCH and/or the HARQ-ACK reception for the PDSCH has the higher priority, the highest priority, the lower priority, and/or the lowest priority).

[0045] Additionally or alternatively, a DCI format 0_0 that is used for scheduling of the PUSCH in the cell may be defined as the DCI format for the uplink. Additionally or alternatively, the C-RNTI, the CS-RNTI, the Temporary C-RNTI, and/or the first RNTI may be used to transmit the DCI format 0_0. Additionally or alternatively, the DCI format 0_0 may be monitored (e.g., transmitted, mapped) in the CSS and/or the USS. Alternatively, the DCI format 0_0 may be monitored (e.g., transmitted, mapped) in the CSS only.

[0046] For example, the DCI included in the DCI format 0_0 may be a frequency domain resource assignment (e.g., for the PUSCH). Additionally or alternatively, the DCI included in the DCI format 0_0 may be a time domain resource assignment (e.g., for the PUSCH). Additionally or alternatively, the DCI included in the DCI format 0_0 may be a modulation and coding scheme (e.g., for the PUSCH). Additionally or alternatively, the DCI included in the DCI format 0_0 may be a new data indicator. Additionally or alternatively, the DCI included in the DCI format 0_0 may be a redundancy version. Additionally or alternatively, the DCI included in the DCI format 0_0 may be a TPC command for scheduled PUSCH. Additionally or alternatively, the DCI included in the DCI format 0_0 may be the priority indication (e.g., for the PUSCH transmission and/or for the PUSCH reception).

[0047] Here, the priority indication may be used for indicating a priority (e.g., 2-bit information, 00: the lowest priority, 01: the lower priority, 10: the higher priority, and/or 11: the highest priority) for the PUSCH transmission and/or the PUSCH reception. For example, in a case that the UE 102 detects the DCI format for the uplink including the priority indication, the UE 102 may identify the PUSCH transmission and/or the

PUSCH reception is prioritized (e.g., the PUSCH transmission and/or the PUSCH reception has the higher priority, the highest priority, the lower priority, and/or the lowest priority).

[0048] Additionally or alternatively, a DCI format 0_1 that is used for scheduling of the PUSCH in the cell may be defined as the DCI format for the uplink. Additionally or alternatively, the C-RNTI, the CS-RNTI and/or the first RNTI may be used to transmit the DCI format 0_1. Additionally or alternatively, the DCI format 0_1 may be monitored (e.g., transmitted, mapped) in the CSS and/or the USS.

[0049] For example, the DCI included in the DCI format 0_1 may be a BWP indicator (e.g., for the PUSCH). Additionally or alternatively, the DCI included in the DCI format 0_1 may be a frequency domain resource assignment (e.g., for the PUSCH). Additionally or alternatively, the DCI included in the DCI format 0_1 may be a time domain resource assignment (e.g., for the PUSCH). Additionally or alternatively, the DCI included in the DCI format 0_1 may be a modulation and coding scheme (e.g., for the PUSCH). Additionally or alternatively, the DCI included in the DCI format 0_1 may be a new data indicator. Additionally or alternatively, the DCI included in the DCI format 0_1 may be a TPC command for scheduled PUSCH. Additionally or alternatively, the DCI included in the DCI format 0_1 may be a CSI request that is used for requesting the CSI reporting. Additionally or alternatively, as described below, the DCI included in the DCI format 0_1 may be information used for indicating an index of a configuration of a configured grant. Additionally or alternatively, the DCI included in the DCI format 0_0 may be the priority indication (e.g., for the PUSCH transmission and/or for the PUSCH reception).

[0050] Additionally or alternatively, a DCI format 0_Y that is used for scheduling of the PUSCH in the cell may be defined as the DCI format for the uplink. Additionally or alternatively, the C-RNTI, the CS-RNTI and/or the first RNTI may be used to transmit the DCI format 0_Y. Additionally or alternatively, the DCI format 0_Y may be monitored (e.g., transmitted, mapped) in the CSS and/or the USS.

[0051] For example, the DCI included in the DCI format 0_Y may be a BWP indicator (e.g., for the PUSCH). Additionally or alternatively, the DCI included in the DCI format 0_Y may be a frequency domain resource assignment (e.g., for the PUSCH). Additionally or alternatively, the DCI included in the DCI format 0_Y may be a time domain resource assignment (e.g., for the PUSCH). Additionally or alternatively, the DCI included in the DCI format 0_Y may be a modulation and coding scheme (e.g., for the PUSCH). Additionally or alternatively, the DCI included in the DCI format 0_Y may be a new data indicator. Additionally or alternatively, the DCI included in the DCI format 0_Y may be a TPC command for scheduled PUSCH. Additionally or alternatively, the DCI included in the DCI format 0_Y may be a CSI request that is used for

requesting the CSI reporting. Additionally or alternatively, as described below, the DCI included in the DCI format 0_Y may be information used for indicating an index of a configuration of a configured grant. Additionally or alternatively, the DCI included in the DCI format 0_Y may be the priority indication (e.g., for the PUSCH transmission and/or for the PUSCH reception).

[0052] Here, the DCI format 0_Y (and/or the DCI format 0_Y including the priority indication, and/or the DCI format 0_Y with the CRC scrambled by the first RNTI, and/or the DCI format 0_Y with the CRC scrambled by the first RNTI including the priority indication) may be used for indicating a priority (e.g., the higher priority, the highest priority, the lower priority, and/or the lowest priority) for the PUSCH transmission and/or the PUSCH reception. For example, in a case that the UE 102 detects the DCI format 0_Y (and/or the DCI format 0_Y including the priority indication, and/or the DCI format 0_Y with the CRC scrambled by the first RNTI, and/or the DCI format 0_Y with the CRC scrambled by the first RNTI including the priority indication), the UE 102 may identify the PUSCH transmission and/or the PUSCH reception is prioritized (e.g., the PUSCH transmission and/or the PUSCH reception has the higher priority, the highest priority, the lower priority, and/or the lowest priority).

[0053] Additionally or alternatively, in a case that the DCI format 1_0, the DCI format 1_1 and/or the DCI format 1_X is received (e.g., based on the detection of the DCI format 1_0, the DCI format 1_1, the DCI format 1_X), the UE 102 may perform the PDSCH reception. Additionally or alternatively, in a case that the DCI format 0_0, the DCI format 0_1, and/or the DCI format 0_Y is received (e.g., based on the detection of the DCI format 0_0, the DCI format 0_1, and/or the DCI format 0_Y), the UE 102 may perform the PUSCH transmission.

[0054] Here, as described above, a RNTI(s) (e.g., a Radio Network Temporary Identifier(s)) assigned to the UE 102 may be used for transmission of DCI (e.g., the DCI format(s), DL control channel(s) (e.g., the PDCCH(s)). Namely, the gNB 160 may transmit, (e.g., by using the RRC message), information used for configuring (e.g., assigning) the RNTI(s) to the UE 102.

[0055] For example, CRC (Cyclic Redundancy Check) parity bits (also referred to simply as CRC), which are generated based on DCI, are attached to DCI, and, after attachment, the CRC parity bits are scrambled by the RNTI(s). The UE 102 may attempt to decode (e.g., blind decoding, monitor, detect) DCI to which the CRC parity bits scrambled by the RNTI(s) are attached. For example, the UE 102 detects DL control channel (e.g., the PDCCH, the DCI, the DCI format(s)) based on the blind decoding. That is, the UE 102 may decode the DL control channel(s) with the CRC scrambled by the RNTI(s). In other words, the UE 102 may monitor the DL control channel(s) with the RNTI(s). For example, the UE 102 may detect the DCI format(s) with the RNTI(s).

[0056] Here, the RNTI(s) may include the C-RNTI(s) (Cell-RNTI(s)), the CS-RNTI(s) (Configured Scheduling C-RNTI(s)), the SI-RNTI(s) (System Information RNTI(s)), the RA-RNTI(s) (Random Access-RNTI(s)), the Temporary C-RNTI(s), and/or the first RNTI.

[0057] For example, the C-RNTI(s) may be a unique identification used for identifying an RRC connection and/or scheduling. Additionally or alternatively, the CS-RNTI(s) may be a unique identification used for scheduling of transmission based on a configured grant. Additionally or alternatively, the SI-RNTI may be used for identifying system information (SI) (e.g., an SI message) mapped on the BCCH and dynamically carried on DL-SCH. Additionally or alternatively, the SI-RNTI may be used for broadcasting of SI. Additionally or alternatively, the RA-RNTI may be an identification used for the random access procedure (e.g., Msg.2 transmission). Additionally or alternatively, the Temporary C-RNTI may be used for the random access procedure (e.g., scheduling of Msg.3 (re)transmission (e.g., Msg.3 PUSCH (re)transmission)).

[0058] Here, in the random access procedure (e.g., a contention based random access procedure), the Msg.3 PUSCH transmission (e.g., an initial transmission) may be scheduled by using a random access response grant. For example, in the random access procedure, the random access response grant may be included in the PDSCH (e.g., the Msg.2 transmission). Also, in the random access procedure, the random access response grant may be used for scheduling of the PUSCH for the Msg. 3 transmission. Also, as described above, the PDCCH (i.e., the DCI format 0_0) with the CRC scrambled by the Temporary C-RNTI may be used for scheduling of the PUSCH for the Msg. 3 transmission (e.g., Msg. 3 retransmission).

[0059] Additionally or alternatively, the first RNTI may be an identification used for indicating a priority (e.g. the higher priority, the highest priority, the lower priority, and/or the lowest priority) for the PDSCH transmission and/or the PDSCH reception. For example, in a case that the UE 102 detects the PDCCH with the CRC scrambled by the first RNTI, the UE 102 may identify the corresponding PDSCH is prioritized (e.g., the corresponding PDSCH transmission/reception has the higher priority, the highest priority, the lower priority, and/or the lowest priority).

[0060] Additionally or alternatively, the first RNTI(s) may be an identification used for indicating a priority (e.g. the higher priority, the highest priority, the lower priority, and/or the lowest priority) for the HARQ-ACK transmission for the PDSCH and/or the HARQ-ACK reception for the PDSCH. For example, in a case that the UE 102 detects the PDCCH with the CRC scrambled by the first RNTI(s), the UE 102 may identify the HARQ-ACK for the corresponding PDSCH is prioritized (e.g., the HARQ-ACK transmission/reception for the corresponding PDSCH has the higher priority, the highest priority, the lower priority, and/or the lowest priority).

[0061] Additionally or alternatively, the first RNTI(s) may be an identification used for indicating a priority (e.g. the higher priority, the highest priority, the lower priority, and/or the lowest priority) for the PUSCH transmission and/or the PUSCH reception. For example, in a case that the UE 102 detects the PDCCH with the CRC scrambled by the first RNTI, the UE 102 may identify the corresponding PUSCH is prioritized (e.g., the corresponding PUSCH transmission/reception has the higher priority, the highest priority, the lower priority, and/or the lowest priority).

[0062] Additionally or alternatively, a physical downlink shared channel (PDSCH) and a physical uplink shared channel (PUSCH) may be defined. For example, in a case that the PDSCH (e.g., the PDSCH resource) is scheduled by using the DCI format(s) for the downlink, the UE 102 may receive the downlink data, on the scheduled PDSCH (e.g., the PDSCH resource). Additionally or alternatively, in a case that the PUSCH (e.g., the PUSCH resource) is scheduled by using the DCI format(s) for the uplink, the UE 102 transmits the uplink data, on the scheduled PUSCH (e.g., the PUSCH resource). For example, the PDSCH may be used to transmit the downlink data (e.g., DL-SCH(s), a downlink transport block(s)). Additionally or alternatively, the PUSCH may be used to transmit the uplink data (e.g., UL-SCH(s), an uplink transport block(s)).

[0063] Furthermore, the PDSCH and/or the PUSCH may be used to transmit information of a higher layer (e.g., a radio resource control (RRC)) layer, and/or a MAC layer). For example, the PDSCH (e.g., from the gNB 160 to the UE 102) and/or the PUSCH (e.g., from the UE 102 to the gNB 160) may be used to transmit a RRC message (a RRC signal). Additionally or alternatively, the PDSCH (e.g., from the gNB 160 to the UE 102) and/or the PUSCH (e.g., from the UE 102 to the gNB 160) may be used to transmit a MAC control element (a MAC CE). Here, the RRC message and/or the MAC CE are also referred to as a higher layer signal.

[0064] In some approaches, a physical broadcast channel (PBCH) may be defined. For example, the PBCH may be used for broadcasting the MIB (master information block). Here, system information may be divided into the MIB and a number of SIB(s) (system information block(s)). For example, the MIB may be used for carrying include minimum system information. Additionally or alternatively, the SIB(s) may be used for carrying system information messages.

[0065] In some approaches, in downlink, a SS (Synchronization Signal) may be defined. The SS may be used for acquiring time and/or frequency synchronization with a cell. Additionally or alternatively, the SS may be used for detecting a physical layer cell ID of the cell.

[0066] In the radio communication for uplink, UL RS(s) may be used as uplink physical signal(s). Additionally or alternatively, in the radio communication for downlink, DL

RS(s) may be used as downlink physical signal(s). The uplink physical signal(s) and/or the downlink physical signal(s) may not be used to transmit information that is provided from the higher layer, but is used by a physical layer.

[0067] Here, the downlink physical channel(s) and/or the downlink physical signal(s) described herein may be assumed to be included in a downlink signal (e.g., a DL signal(s)) in some implementations for the sake of simple descriptions. Additionally or alternatively, the uplink physical channel(s) and/or the uplink physical signal(s) described herein may be assumed to be included in an uplink signal (i.e. an UL signal(s)) in some implementations for the sake of simple descriptions.

[0068] Also, in a carrier aggregation (CA), the gNB 160 and the UE 102 may communicate with each other using one or more serving cells. Here the one or more serving cells may include one primary cell and one or more secondary cells. For example, the gNB 160 may transmit, by using the RRC message, information used for configuring one or more secondary cells to form together with the primary cell a set of serving cells. Namely, the set of serving cells may include one primary cell and one or more secondary cells. Here, the primary cell may be always activated. Also, the gNB 160 may activate one or more secondary cell within the configured secondary cells. Here, in the downlink, a carrier corresponding to the primary cell may be the downlink primary component carrier (i.e., the DL PCC), and a carrier corresponding to a secondary cell may be the downlink secondary component carrier (i.e., the DL SCC). Also, in the uplink, a carrier corresponding to the primary cell may be the uplink primary component carrier (i.e., the UL PCC), and a carrier corresponding to the secondary cell may be the uplink secondary component carrier (i.e., the UL SCC).

[0069] The UE operations module 124 may provide information 148 to the one or more receivers 120. For example, the UE operations module 124 may inform the receiver(s) 120 when to receive retransmissions.

[0070] The UE operations module 124 may provide information 138 to the demodulator 114. For example, the UE operations module 124 may inform the demodulator 114 of a modulation pattern anticipated for transmissions from the gNB 160.

[0071] The UE operations module 124 may provide information 136 to the decoder 108. For example, the UE operations module 124 may inform the decoder 108 of an anticipated encoding for transmissions from the gNB 160.

[0072] The UE operations module 124 may provide information 142 to the encoder 150. The information 142 may include data to be encoded and/or instructions for encoding. For example, the UE operations module 124 may instruct the encoder 150 to encode transmission data 146 and/or other information 142. The other information 142 may include PDSCH HARQ-ACK information.

[0073] The encoder 150 may encode transmission data 146 and/or other information 142

provided by the UE operations module 124. For example, encoding the data 146 and/or other information 142 may involve error detection and/or correction coding, mapping data to space, time and/or frequency resources for transmission, multiplexing, etc. The encoder 150 may provide encoded data 152 to the modulator 154.

[0074] The UE operations module 124 may provide information 144 to the modulator 154. For example, the UE operations module 124 may inform the modulator 154 of a modulation type (e.g., constellation mapping) to be used for transmissions to the gNB 160. The modulator 154 may modulate the encoded data 152 to provide one or more modulated signals 156 to the one or more transmitters 158.

[0075] The UE operations module 124 may provide information 140 to the one or more transmitters 158. This information 140 may include instructions for the one or more transmitters 158. For example, the UE operations module 124 may instruct the one or more transmitters 158 when to transmit a signal to the gNB 160. For instance, the one or more transmitters 158 may transmit during a UL subframe. The one or more transmitters 158 may upconvert and transmit the modulated signal(s) 156 to one or more gNBs 160.

[0076] Each of the one or more gNBs 160 may include one or more transceivers 176, one or more demodulators 172, one or more decoders 166, one or more encoders 109, one or more modulators 113, a data buffer 162 and a gNB operations module 182. For example, one or more reception and/or transmission paths may be implemented in a gNB 160. For convenience, only a single transceiver 176, decoder 166, demodulator 172, encoder 109 and modulator 113 are illustrated in the gNB 160, though multiple parallel elements (e.g., transceivers 176, decoders 166, demodulators 172, encoders 109 and modulators 113) may be implemented.

[0077] The transceiver 176 may include one or more receivers 178 and one or more transmitters 117. The one or more receivers 178 may receive signals from the UE 102 using one or more physical antennas 180a-n. For example, the receiver 178 may receive and downconvert signals to produce one or more received signals 174. The one or more received signals 174 may be provided to a demodulator 172. The one or more transmitters 117 may transmit signals to the UE 102 using one or more physical antennas 180a-n. For example, the one or more transmitters 117 may upconvert and transmit one or more modulated signals 115.

[0078] The demodulator 172 may demodulate the one or more received signals 174 to produce one or more demodulated signals 170. The one or more demodulated signals 170 may be provided to the decoder 166. The gNB 160 may use the decoder 166 to decode signals. The decoder 166 may produce one or more decoded signals 164, 168. For example, a first eNB-decoded signal 164 may comprise received payload data, which may be stored in a data buffer 162. A second eNB-decoded signal 168 may

comprise overhead data and/or control data. For example, the second eNB decoded signal 168 may provide data (e.g., PDSCH HARQ-ACK information) that may be used by the gNB operations module 182 to perform one or more operations.

[0079] In general, the gNB operations module 182 may enable the gNB 160 to communicate with the one or more UEs 102. The gNB operations module 182 may include one or more of a gNB scheduling module 194. The gNB scheduling module 194 may perform scheduling of downlink and/or uplink transmissions as described herein.

[0080] The gNB operations module 182 may provide information 188 to the demodulator 172. For example, the gNB operations module 182 may inform the demodulator 172 of a modulation pattern anticipated for transmissions from the UE(s) 102.

[0081] The gNB operations module 182 may provide information 186 to the decoder 166. For example, the gNB operations module 182 may inform the decoder 166 of an anticipated encoding for transmissions from the UE(s) 102.

[0082] The gNB operations module 182 may provide information 101 to the encoder 109. The information 101 may include data to be encoded and/or instructions for encoding. For example, the gNB operations module 182 may instruct the encoder 109 to encode information 101, including transmission data 105.

[0083] The encoder 109 may encode transmission data 105 and/or other information included in the information 101 provided by the gNB operations module 182. For example, encoding the data 105 and/or other information included in the information 101 may involve error detection and/or correction coding, mapping data to space, time and/or frequency resources for transmission, multiplexing, etc. The encoder 109 may provide encoded data 111 to the modulator 113. The transmission data 105 may include network data to be relayed to the UE 102.

[0084] The gNB operations module 182 may provide information 103 to the modulator 113. This information 103 may include instructions for the modulator 113. For example, the gNB operations module 182 may inform the modulator 113 of a modulation type (e.g., constellation mapping) to be used for transmissions to the UE(s) 102. The modulator 113 may modulate the encoded data 111 to provide one or more modulated signals 115 to the one or more transmitters 117.

[0085] The gNB operations module 182 may provide information 192 to the one or more transmitters 117. This information 192 may include instructions for the one or more transmitters 117. For example, the gNB operations module 182 may instruct the one or more transmitters 117 when to (or when not to) transmit a signal to the UE(s) 102. The one or more transmitters 117 may upconvert and transmit the modulated signal(s) 115 to one or more UEs 102.

[0086] It should be noted that a DL subframe may be transmitted from the gNB 160 to one or more UEs 102 and that a UL subframe may be transmitted from one or more UEs

102 to the gNB 160. Furthermore, both the gNB 160 and the one or more UEs 102 may transmit data in a standard special subframe.

[0087] It should also be noted that one or more of the elements or parts thereof included in the eNB(s) 160 and UE(s) 102 may be implemented in hardware. For example, one or more of these elements or parts thereof may be implemented as a chip, circuitry or hardware components, etc. It should also be noted that one or more of the functions or methods described herein may be implemented in and/or performed using hardware. For example, one or more of the methods described herein may be implemented in and/or realized using a chipset, an application-specific integrated circuit (ASIC), a large-scale integrated circuit (LSI) or integrated circuit, etc.

[0088] Figure 2 shows examples of multiple numerologies 201. As shown in Figure 2, multiple numerologies 201 (e.g., multiple subcarrier spacing) may be supported. For example, μ (e.g., a subcarrier space configuration) and a cyclic prefix (e.g., the μ and the cyclic prefix for a carrier bandwidth part) may be configured by higher layer parameters (e.g., a RRC message) for the downlink and/or the uplink. Here, 15 kHz may be a reference numerology 201. For example, an RE of the reference numerology 201 may be defined with a subcarrier spacing of 15 kHz in a frequency domain and 2048Ts + CP length (e.g. 160Ts or 144Ts) in a time domain, where Ts denotes a baseband sampling time unit defined as 1/(15000*2048) seconds.

[0089] Additionally or alternatively, a number of OFDM symbol(s) 203 per slot $\left(N_{symb}^{slot}\right)$ may be determined based on the μ (e.g., the subcarrier space configuration). Here, for example, a slot configuration 0 (e.g., the number of OFDM symbols 203 per slot may be 14) and/or a slot configuration (e.g., the number of OFDM symbols 203 per slot may be 7) may be defined.

[0090] Figure 3 is a diagram illustrating one example of a resource grid 301 and resource block 391 (e.g., for the downlink and/or the uplink). The resource grid 301 and resource block 391 illustrated in Figure 3 may be utilized in some implementations of the systems and methods disclosed herein.

[0091]

In Figure 3, one subframe 369 may include $N_{symbol}^{subframe,\mu}$ symbols 387. Additionally or alternatively, a resource block 391 may include a number of resource elements (RE) 389. Here, in the downlink, the OFDM access scheme with cyclic prefix (CP) may be employed, which may be also referred to as CP-OFDM. A downlink radio frame may include multiple pairs of downlink resource blocks (RBs) 391 which is also referred to as physical resource blocks (PRBs). The downlink RB pair is a unit for assigning downlink radio resources, defined by a predetermined bandwidth (RB bandwidth) and a time slot. The downlink RB pair may include two downlink RBs 391 that are continuous in the time domain. Additionally or alternatively, the downlink RB 391 may include twelve sub-carriers in frequency domain and seven (for normal CP) or six (for extended CP) OFDM symbols in time domain. A region defined by one sub-carrier in frequency domain and one OFDM symbol in time domain is referred to as a resource element (RE) 389 and is uniquely identified by the index pair (k,l), where k and l are indices in the frequency and time domains, respectively.

[0092] Additionally or alternatively, in the uplink, in addition to CP-OFDM, a Single-Carrier Frequency Division Multiple Access (SC-FDMA) access scheme may be employed, which is also referred to as Discrete Fourier Transform-Spreading OFDM (DFT-S-OFDM). An uplink radio frame may include multiple pairs of uplink resource blocks 391. The uplink RB pair is a unit for assigning uplink radio resources, defined by a predetermined bandwidth (RB bandwidth) and a time slot. The uplink RB pair may include two uplink RBs 391 that are continuous in the time domain. The uplink RB may include twelve sub-carriers in frequency domain and seven (for normal CP) or six (for extended CP) OFDM/DFT-S-OFDM symbols in time domain. A region defined by one sub-carrier in the frequency domain and one OFDM/DFT-S-OFDM symbol in the time domain is referred to as a resource element (RE) 389 and is uniquely identified by the index pair (k,l) in a slot, where k and l are indices in the frequency and time domains respectively.

[0093]

Each element in the resource grid 301 (e.g., antenna port p) and the subcarrier configuration μ is called a resource element 389 and is uniquely identified by the index pair (k,l) where $k = 0, \ldots, N_{RB}^{\mu} N_{SC}^{RB} - 1$ is the index in the frequency domain and l refers to the symbol position in the time domain. The resource element (k,l) 389 on the antenna port p and the subcarrier spacing configuration μ is denoted $(k,l)_{p,\mu}$. The physical resource block 391 is defined as $N_{SC}^{RB} = 12$ consecutive subcarriers in the frequency domain. The physical resource blocks 391 are numbered from 0 to $N_{RB}^{\mu} - 1$ in the frequency domain. The relation between the physical resource block number n_{PRB} in the frequency domain and the resource element (k,l) is given by $n_{PRB} = \left\lfloor \frac{k}{N_{SC}^{RB}} \right\rfloor$.

[0094] Figure 4 shows examples of resource regions (e.g., resource region of the downlink). One or more sets 401 of PRB(s) 491 (e.g., a control resource set (e.g., CORESET)) may be configured for DL control channel monitoring (e.g., the PDCCH monitoring). For example, the CORESET is, in the frequency domain and/or the time domain, a set 401 of PRBs 491 within which the UE 102 attempts to decode the DCI (e.g., the DCI format(s), the PDCCH(s)), where the PRBs 491 may or may not be frequency contiguous and/or time contiguous, a UE 102 may be configured with one or more control resource sets (e.g., the CORESETs) and one DCI message may be mapped within one control resource set. In the frequency-domain, a PRB 491 is the resource unit size (which may or may not include DM-RS) for the DL control channel.

[0095] The UE 102 may monitor a set of candidates of the PDCCH in one or more control resource sets (e.g., CORESETs) on the active DL bandwidth part (BWP) on each activated serving cell according to corresponding search space sets. Here, the term "monitor" may imply that the UE 102 attempts to decode each PDCCH (e.g., the set of candidates of the PDCCH) according to the monitored DCI format(s). Also, the candidates of the PDCCH may be candidates for which the DL control channel(s) may possibly be mapped, assigned, and/or transmitted.

[0096] The set of candidates of the PDCCH for the UE 102 to monitor may be defined in terms of a search space set(s) (e.g., also referred to simply as a search space(s)). The UE 102 may monitor the set of candidates of the PDCCH in the search space(s). The search space set(s) may comprise a common search space(s) (CSS(s), UE-common search space(s)) and/or a user equipment-specific search space(s) (USS, UE-specific search space(s)).

[0097] Namely, the CSS and/or the USS may be defined (e.g., configured) in a region(s) of

DL control channel(s). For example, the CSS may be used for transmission of DCI to a plurality of the UEs 102. For example, a Type0-PDCCH common search space may be defined for the DCI format(s) with CRC scrambled by the SI-RNTI. Additionally or alternatively, a Type1-PDCCH common search space may be defined for the DCI format(s) with CRC scrambled by the RA-RNTI, the Temporary C-RNTI, and/or the C-RNTI. Additionally or alternatively, a Type3-PDCCH common search space may be defined for the DCI format(s) with CRC scrambled by the C-RNTI, and/or the CS-RNTI.

[0098] The USS may be used for transmission of DCI to a specific UE 102. For example, the USS may be determined based on a Radio Network Temporary Identifier (RNTI) (e.g., the C-RNTI). For instance, the USS may be defined for the DCI format(s) with CRC scrambled by the C-RNTI, and/or the CS-RNTI.

[0099] Here, the gNB 160 may transmit, by using the RRC message, first information used for configuring (e.g., determining) one or more CORESETs. For example, for each of DL BWPs (e.g., each of DL BWPs in the serving cell), the gNB 106 may transmit, by using the RRC message, the first information used for configuring the one or more CORESET. For example, the first information may include information used for configuring an index of the CORESET. Also, the first information may include information used for configuring a number of consecutive symbols for the CORESET. Also, the first information may include information used for configuring a set of resource blocks for the CORESET.

[0100] Here, the index "0" of the CORESET (i.e., a value "0" of the CORESET) may be configured by using the MIB and/or the SIB(s). For example, the index "0" of the CORESET may be used for identifying a common CORESET configured in the MIB and/or the SIB(s). Namely, the index of the CORESET except for the value "0" may be configured as the index of the CORESET. Also, the index of the CORESET with the value "0" may be configured by using information of a CORESET-zero. Also, the index "0" of the CORESET may be configured by using a dedicated RRC message (i.e., a UE-specific RRC message, and/or a serving cell-specific RRC message). Namely, the gNB 160 may transmit, by using the MIB, information used for configuring the CORESET with the index "0" (i.e., a CORESET #0). Additionally or alternatively, the gNB 160 may transmit, by using the SIB(s), the information used for configuring the CORESET #0. Additionally or alternatively, the gNB 160 may transmit, by using the dedicated RRC message, the information used for configuring the CORESET #0.

[0101] Here, the CORESET #0 may be configured for an initial BWP(s) (e.g., the initial DL BWP(s)). Here, the gNB 160 may transmit, by using the RRC message (e.g., the MIB, the SIB(s), and/or the dedicated RRC message), information used for the initial

BWP(s) (e.g., the initial BWP(s)). Also, an index of the initial BWP(s) (e.g., the initial DL BWP(s)) may be "0". Namely, the index "0" (e.g., the value "0") may be applied (e.g., defined) for the initial BWP(s) (e.g., the initial DL BWP(s)). For example, (e.g., for the primary cell), the initial BWP(s) (i.e., the BWP with the index "0") may be the BWP(s) used for an initial access. Additionally or alternately, (e.g., for the secondary cell(s)), the initial BWP(s) (i.e., the BWP(s) with the index "0") may be the BWP(s) configured for the UE to first operate at the secondary cell(s) activation.

[0102] Here, the gNB 106 may transmit, by using the RRC message (e.g., the MIB, the SIB(s), and/or the dedicated RRC message), information used for configuring an index of the DL BWP(s) (e.g., the index other than the index "0"). Also, the gNB 106 may transmit, by using the RRC message (e.g., the MIB, the SIB(s), and/or the dedicated RRC message), information used for configuring an index of the UL BWP(s) (e.g., the index other than the index "0").

[0103] As described above, the CORESET#0 may be referred to as the common CORESET. Also, the CORESET other than the CORESET#0 may be referred to as a UE-specific CORESET. Namely, the CORESET with the index "X (e.g., X=1, 2, 3, ...)" other than the index "0" may be referred to as the UE-specific CORESET. For example, the gNB 160 may transmit, by using the dedicated RRC message, information used for configuring the UE-specific CORESET (e.g., the index of the UE-specific CORESET).

[0104] Additionally or alternatively, for each of the one or more CORESETs, the search space set(s) (e.g., the set(s) of the CSS(s) and/or the USS(s)) may be configured. For example, the first information may be configured per DL BWP. Namely, the first information may be configured for each of the DL BWPs in the serving cell.

[0105] Additionally or alternatively, the gNB 160 may transmit, by using the RRC message, second information used for configuring the search space set(s). For example, the second information may be configured for each search space set. For example, the second information may include information used for configuring an index of the search space set(s). Additionally or alternatively, the second information may include information used for configuring the index of the CORESET(s) associated with the search space set(s). Additionally or alternatively, the second information may include information used for indicating a PDCCH monitoring periodicity and/or a PDCCH monitoring offset where the UE 102 monitors the PDCCH(s) in the search space set(s). Additionally or alternatively, the second information may include information used for indicating a PDCCH monitoring pattern within a slot. For example, the information used for indicating the PDCCH monitoring pattern may be used for indicating first symbol(s) within a slot for the PDCCH monitoring. For instance, the UE 102 may determine a PDCCH monitoring occasion(s) based on the PDCCH monitoring periodicity, the PDCCH monitoring offset, and/or the PDCCH monitoring pattern within

a slot.

[0106] Additionally or alternatively, the second information may include information used for indicating a type of the search space set (e.g., information used for indicating that the search space set is either the CSS or the USS). Additionally or alternatively, the second information may include information used for indicating one or more DCI formats which accordingly the UE 102 monitors the PDCCH in the search space set(s). For example, if the search space set is the CSS (e.g., if the search space set is configured as the CSS), the DCI format 0_0 and/or the DCI format 1_0 may be configured to monitor the PDCCH (e.g., the candidate(s) of the PDCCH(s)). Here, the DCI format(s) for monitoring the PDCCH in the CSS may be scrambled by the C-RNTI, the CS-RNTI, the RA-RNTI, the Temporary C-RNTI, the SI-RNTI, and/or the first RNTI.

[0107] Additionally or alternatively, if the search space set is the USS (e.g., if the search space set is configured as the USS), the DCI format 0_0, the DCI format 1_0, the DCI format 0_Y, and/or the DCI format 1_X may be configured to monitor the PDCCH (e.g., the candidate(s) of the PDCCH(s)). Additionally or alternatively, if the search space set is the USS, the DCI format 0_1, the DCI format 1_1, the DCI format 0_Y, and/or the DCI format 1_X may be configured to monitor the PDCCH (e.g., the candidate(s) of the PDCCH(s)). For example, if the search space set is the USS, either of a first set of DCI formats (e.g., the DCI format 0_0, the DCI format 1_0, and/or the DCI format 0_Y, and/or the DCI format 1_X) or a second set of DCI formats (e.g., the DCI format 0_1, the DCI format 1_1, the DCI format 0_Y, and/or the DCI format 1_X) may be configured to monitor the PDCCH (e.g., the candidate(s) of the PDCCH(s)). Here, the DCI format(s) for monitoring the PDCCH in the USS may be scrambled by the C-RNTI, the CS-RNTI, and/or the first RNTI. For example, the second information may be configured per search space set. Namely, the second information may be configured for each of search space sets.

[0108] Here, the index “0” of the search space set (i.e., a value “0” of the search space set) may be configured by using the MIB and/or the SIB(s). For example, the index “0” of the search space set may be used for identifying a common search space set configured in the MIB and/or the SIB(s). Namely, the index of the search space set except for the value “0” may be configured as the index of the search space. Also, the index of the search space set with the value “0” may be configured by using information of search space-zero. Also, the index “0” of the search space set may be configured by using a dedicated RRC message (i.e., a UE-specific RRC message, and/or a serving cell-specific RRC message). Namely, the gNB 160 may transmit, by using the MIB, information used for configuring the search space set with the index “0” (i.e., the search space set #0). Additionally or alternatively, the gNB 160 may transmit, by using the

SIB(s), the information used for configuring the search space set #0. Additionally or alternatively, the gNB 160 may transmit, by using the dedicated RRC message, the information used for configuring the search space set #0. Here, the search space set #0 may be configured for the initial BWP(s) (e.g., the initial DL BWP(s)).

[0109] As described above, the search space set #0 may be referred to as the common search space set. Also, the search space set other than the search space set #0 may be referred to as a UE-specific search space set. Namely, the search space set with the index "X (e.g., X=1, 2, 3, ...)" other than the index "0" may be referred to as the UE-specific search space set. For example, the gNB 160 may transmit, by using the dedicated RRC message, information used for configuring the UE-specific search space set (e.g., the index of the UE-specific search space set).

[0110] Here, for example, for the serving cell(s), the gNB 160 may configure, by using the RRC message, a set of four DL BWPs (e.g., at most four DL BWPs, a DL BWP set) (e.g., for receptions by the UE 102). Additionally or alternatively, the gNB 160 may indicate, by using the DCI format(s) for the downlink, an active DL BWP(s). For example, for each DL BWP in the set of DL BWPs, the gNB 160 may configure, by using the RRC message, the subcarrier spacing, the cyclic prefix, a number of contiguous PRBs 491 (e.g., a bandwidth of PRBs), and/or an index (e.g., the index of the DL BWP(s)) in the set of DL BWPs.

[0111] Additionally or alternatively, for the serving cell(s), the gNB 160 may configure, by using the RRC message, a set of four UL BWP(s) (e.g., at most four UL BWPs, a UL BWP set) (e.g., for transmissions by the UE 102). Additionally or alternatively, the gNB 160 may indicate, by using the DCI format(s) for the uplink, an active UL BWP(s). Additionally or alternatively, for each UL BWP in the set of UL BWPs, the gNB 160 may configure, by using the RRC message, the subcarrier spacing, the cyclic prefix, a number of contiguous PRBs 491 (e.g., a bandwidth of PRBs), an index (e.g., the index of the UL BWP(s)) in the set of UL BWPs.

[0112] Additionally or alternatively, the UE 102 may perform, based on the configuration(s) for the DL BWP(s), reception(s) on the PDCCH in the DL BWP(s) and/or reception(s) on the PDSCH in the DL BWP(s). Additionally or alternatively, the UE 102 may perform, based on the configuration(s) for the UL BWP(s).

[0113] Figure 5 illustrates an example of a prioritization for PDSCH reception. In this example, a first PDCCH 501 may be received by a UE 102. A first PDSCH reception 505 may correspond to the first PDCCH 501. A second PDCCH 503 may be received by the UE 102. A second PDSCH reception 507 may correspond to the second PDCCH 503. The first PDSCH reception 505 and the second PDSCH reception 507 may occur in a time 509. In this example, the first PDSCH reception 505 may occur before and/or after the second PDCCH 503 and/or the second PDSCH reception 507 in

the time 509.

[0114] Figure 6 illustrates an example of a prioritization for HARQ-ACK transmission for PDSCH. In this example, a first PDCCH 601 may be received by a UE 102. A first PDSCH reception 605 may correspond to the first PDCCH 601. A second PDCCH 603 may be received by the UE 102. A second PDSCH reception 607 may correspond to the second PDCCH 603.

[0115] An HARQ-ACK transmission 611 may be performed by the UE 102 for the first PDSCH 605 corresponding to the first PDCCH 601. An HARQ-ACK transmission 613 may be performed by the UE 102 for the second PDSCH 607 corresponding to the second PDCCH 603. The HARQ-ACK transmission 611 for the first PDSCH 605 and the HARQ-ACK transmission 613 for the second PDSCH 607 may occur in a time 609. In this example, the HARQ-ACK transmission 611 for the first PDSCH 605 may occur before and/or after the HARQ-ACK transmission 613 for the second PDSCH 607 in the time 609.

[0116] Figure 7 illustrates an example of a prioritization for PUSCH transmissions. A first PDCCH 701 may be received by a UE 102. Also, a second PDCCH 703 may be received by the UE 102. A first PUSCH transmission 705 may correspond to the first PDCCH 701. A second PUSCH transmission 707 may correspond to the second PDCCH 703. The first PUSCH transmission 705 and the second PUSCH transmission 707 may occur in a time 709. In this example, the first PUSCH transmission 705 may occur before and/or after the second PUSCH transmission 707 in the time 709.

[0117] With regard to figures 5-

7, the PDSCH transmission and/or the PDSCH reception may be prioritized (e.g., considered as the higher priority, the highest priority, the lower priority, and/or the lowest priority) based on the indication. Additionally or alternatively, the HARQ-ACK transmission for the PDSCH and/or the HARQ-ACK reception for the PDSCH may be prioritized (e.g., considered as the higher priority, the highest priority, the lower priority, and/or the lowest priority) based on the indication. Additionally or alternatively, the PUSCH transmission and/or the PUSCH reception may be prioritized (e.g., considered as the higher priority, the highest priority, the lower priority, and/or the lowest priority) based on the indication.

[0118] Also, the indication may include the priority indication (and/or the DCI format(s) including the priority indication). Also, the indication may include the first RNTI (and/or the DCI format(s) with the CRC scrambled by the first RNTI, and/or the DCI format(s) with the CRC scrambled by the first RNTI including the priority indication). Also, the indication may include the DCI format 1_X (and/or the DCI format 1_X including the priority indication, and/or the DCI format 1_X with the CRC scrambled by the first RNTI, and/or the DCI format 1_X with the CRC scrambled by the first

RNTI including the priority indication). Also, the indication may include the DCI format 0_Y (and/or the DCI format 0_Y including the priority indication, and/or the DCI format 0_Y with the CRC scrambled by the first RNTI, and/or the DCI format 0_Y with the CRC scrambled by the first RNTI including the priority indication). Here, the indication described herein may be assumed to be included in a first indication in some implementations for the sake of simple descriptions.

[0119] Here, a timing (e.g., a symbol(s) and/or a slot(s), e.g., in the time 509) for the PDSCH reception may be determined based on the information (e.g., a value of the time domain resource assignment field) included in the DCI format(s) for the downlink. Also, the timing for the PDSCH reception may be determined based on the information (e.g., a value of the time domain resource assignment field) included in the DCI format(s) for the downlink and information included in the RRC message. For example, the gNB 160 may transmit, by using the RRC message, the information used for configuring more than one values for the timing for the PDSCH reception, and transmit, by using the DCI format(s) for the downlink, the information used for indicating a value for the timing for the PDSCH reception among from the configured more than one values.

[0120] And, in a case that the UE 102 sequentially detects more than one DCI formats scheduling PDSCHs (e.g., PDSCH receptions) overlapped in radio resources (i.e., PDSCH resources) and/or in the time (e.g., in the time 509 (e.g., in a symbol(s), and/or in a slot(s))), the prioritization for the PDSCH reception may be considered. Namely, in a case that the PDSCH receptions overlapped in the radio resources and/or in the time would be performed, the prioritization for the PDSCH reception may be considered. For example, for the PDSCH reception, in a case that the UE 102 detects more than one DCI formats scheduling PDSCHs overlapped in the radio resources and/or in the time, the UE 102 may determine, based on the first indication, the priority for the PDSCH reception. For example, the UE 102 may determine, based on a value of the priority indication (e.g., 2-bit information, 00: the lowest priority, 01: the lower priority, 10: the higher priority, 11: the highest priority), the priority for the PDSCH reception.

[0121] Additionally or alternatively, the UE 102 may determine, based on the RNTI(s), the priority for the PDSCH reception. For example, the PDSCH reception corresponding to the PDCCH (i.e., the DCI format(s) for the downlink) with the CRC scrambled by the first RNTI may have the higher priority than the PDSCH reception corresponding to the PDCCH with the CRC scrambled by the C-RNTI and/or the CS-RNTI. Here, the PDSCH reception corresponding to the PDCCH with the CRC scrambled by the SI-RNTI, and/or the RA-RNTI may have the higher priority than the PDSCH reception corresponding to the PDCCH with the CRC scrambled by the first RNTI, the C-RNTI,

and/or the CS-RNTI.

[0122] Additionally or alternatively, the UE 102 may determine, based on the DCI format(s), the priority for the PDSCH reception. For example, the PDSCH reception corresponding to the DCI format 1_X may have the higher priority than the PDSCH transmission corresponding to the DCI format 1_1 and/or the DCI format 1_0. Additionally or alternatively, the PDSCH reception corresponding to the DCI format 1_0 may have the higher priority than the PDSCH reception corresponding to the DCI format 1_X and/or the DCI format 1_1.

[0123] Additionally or alternatively, the UE 102 may determine, based on a detected order of the DCI format(s), the priority for the PDSCH reception. For example, the PDSCH reception corresponding to a later DCI format(s) (i.e., a later detected DCI format(s)) may have the higher priority than the PDSCH reception corresponding to an earlier DCI format(s) (an earlier detected DCI format(s)). For example, for the PDSCH reception, in a case that the UE 102 detects more than one DCI formats scheduling PDSCHs overlapped in the radio resources and/or in the time, the UE 102 may consider (e.g., assume, identify) that the later DCI format(s) has the higher priority than the earlier DCI format(s).

[0124] Here, the UE 102 may perform in the time (e.g., in the time 509), the PDSCH reception based on the priority. For example, the UE 102 may perform the PDSCH reception corresponding to the higher priority. For example, the UE 102 may stop (e.g., drop) the PDSCH reception (e.g., ongoing PDSCH reception) corresponding to the lower priority, and perform the PDSCH reception corresponding to the higher priority (e.g., perform only the PDSCH reception corresponding to the higher priority). Additionally or alternatively, the PDSCH (e.g., the PDSCH reception) corresponding to the lower priority may be punctured (e.g., and/or rate-matched) by (e.g., and/or for) the PDSCH (e.g., the PDSCH reception) corresponding to the higher priority. Namely, for a resource element mapping(s) (e.g., a PDSCH resource element mapping(s)), a coded symbol(s) of the downlink data (e.g., a modulation coded symbol(s)) corresponding to the lower priority is punctured (e.g., overwritten) by a coded symbol(s) of the downlink data (e.g., a modulation coded symbol(s)) corresponding to the higher priority. Additionally or alternatively, for a resource element mapping(s) (e.g., a PDSCH resource element mapping(s)), a coded symbol(s) of the downlink data corresponding to the lower priority is rate-matched (e.g., skipped) for a coded symbol(s) of the downlink data corresponding to the higher priority.

[0125] Additionally or alternatively, a timing (e.g., a symbol(s) and/or a slot(s), e.g., in the time 609) for the HARQ-ACK transmission for the PDSCH may be determined based on the information (e.g., a value of the PDSCH-to-HARQ feedback timing indicator field) included in the DCI format(s) for the downlink. Also, the timing for the PDSCH

reception may be determined based on the information (e.g., a value of the PDSCH-to-HARQ feedback timing indicator field) included in the DCI format(s) for the downlink and information included in the RRC message. For example, the gNB 160 may transmit, by using the RRC message, the information used for configuring more than one values for the timing for the HARQ-ACK transmission for the PDSCH, and transmit, by using the DCI format(s) for the downlink, the information used for indicating a value for the timing for the HARQ-ACK transmission for the PDSCH among from the configured more than one values.

[0126] And, in a case that the HARQ-ACK transmissions overlapped in radio resources (i.e., the PUSCH resources and/or the PUCCH resources) and/or in the time (e.g., in the time 609 (e.g., in a symbol(s), and/or in a slot(s))) would be performed, the prioritization for the HARQ-ACK transmission for the PDSCH may be considered. For example, in a case that the HARQ-ACK transmission overlapped in the radio resources and/or in the time, the UE 102 may determine, based on the first indication, the priority for the HARQ-ACK transmission for the PDSCH. For example, the UE 102 may determine, based on a value of the priority indication (e.g., 2-bit information, 00: the lowest priority, 01: the lower priority, 10: the higher priority, 11: the highest priority), the priority for the HARQ-ACK transmission for the PDSCH.

[0127] Additionally or alternatively, the UE 102 may determine, based on the RNTI(s), the priority for the HARQ-ACK transmission for the PDSCH. For example, the HARQ-ACK transmission for the PDSCH corresponding to the PDCCH (i.e., the DCI format(s) for the downlink) with the CRC scrambled by the first RNTI may have the higher priority than the HARQ-ACK transmission for the PDSCH corresponding to the PDCCH with the CRC scrambled by the C-RNTI and/or the CS-RNTI.

[0128] Additionally or alternatively, the UE 102 may determine, based on the DCI format(s), the priority for the HARQ-ACK transmission for the PDSCH. For example, the HARQ-ACK transmission for the PDSCH corresponding to the DCI format 1_X may have the higher priority than the HARQ-ACK transmission for the PDSCH corresponding to the DCI format 1_1 and/or the DCI format 1_0. Additionally or alternatively, the HARQ-ACK transmission for the PDSCH corresponding to the DCI format 1_0 may have the higher priority than the HARQ-ACK transmission for the PDSCH corresponding to the DCI format 1_X and/or the DCI format 1_1.

[0129] Additionally or alternatively, the UE 102 may determine, based on a detected order of the the DCI format(s), the priority for the HARQ-ACK transmission for the PDCH. For example, the HARQ-ACK transmission for the PDSCH corresponding to a later DCI format(s) (i.e., a later detected DCI format(s)) may have the higher priority than the HARQ-ACK transmission for the PDSCH corresponding to an earlier DCI format(s) (an earlier detected DCI format(s)). For example, in a case that the HARQ-

ACK transmission overlapped in the radio resources and/or in the time would be performed, the UE 102 may consider (e.g., assume, identify) that the HARQ-ACK transmission for the PDSCH corresponding to the later DCI format(s) has the higher priority than the HARQ-ACK transmission for the PDSCH corresponding to the earlier DCI format(s).

[0130] Here, the UE 102 may perform in the time (e.g., in the time 609), based on the priority, the HARQ-ACK transmission for the PDSCH. For example, the UE 102 may perform the HARQ-ACK transmission for the PDSCH corresponding to the higher priority. For example, the UE 102 may stop (e.g., drop) the HARQ-ACK transmission for the PDSCH (e.g., ongoing HARQ-ACK transmission) corresponding to the lower priority, and perform the HARQ-ACK transmission for the PDSCH corresponding to the higher priority (e.g., perform only the HARQ-ACK transmission for the PDSCH corresponding to the higher priority). Additionally or alternatively, the HARQ-ACK bit(s) for the PDSCH (e.g., the HARQ-ACK transmission for the PDSCH) corresponding to the lower priority may be punctured (e.g., and/or rate-matched) by (e.g., and/or for) the HARQ-ACK bit(s) for the PDSCH (e.g., the HARQ-ACK for the PDSCH) corresponding to the higher priority. Namely, for a resource element mapping(s) (e.g., a PUCCH/a PUSCH resource element mapping(s)), a coded symbol(s) of the HARQ-ACK bit(s) (e.g., a modulation coded symbol(s)) corresponding to the lower priority is punctured (e.g., overwritten) by a coded symbol(s) of the HARQ-ACK bit(s) (e.g., a modulation coded symbol(s)) corresponding to the higher priority. Additionally or alternatively, for a resource element mapping(s) (e.g., a PUCCH/a PUSCH resource element mapping(s)), a coded symbol(s) of the HARQ-bit(s) corresponding to the lower priority is rate-matched (e.g., skipped) for a coded symbol(s) of the HARQ-ACK bit(s) corresponding to the higher priority.

[0131] Here, a timing (e.g., a symbol(s) and/or a slot(s), e.g., in the time 709) for the PUSCH transmission may be determined based on the information (e.g., a value of the time domain resource assignment field) included in the DCI format(s) for the uplink. Also, the timing for the PUSCH transmission may be determined based on the information (e.g., a value of the time domain resource assignment field) included in the DCI format(s) for the uplink and information included in the RRC message. For example, the gNB 160 may transmit, by using the RRC message, the information used for configuring more than one values for the timing for the PUSCH transmission, and transmit, by using the DCI format(s) for the uplink, the information used for indicating a value for the timing for the PUSCH transmission among from the configured more than one values.

[0132] And, in a case that the UE 102 sequentially detects more than one DCI formats scheduling PUSCHs (e.g., PUSCH transmissions) overlapped in radio resources (i.e.,

PUSCH resources) and/or in the time (e.g., in the time 709 (e.g., in a symbol(s), and/or in a slot(s))), the prioritization for the PUSCH transmission may be considered. Namely, in a case that the PUSCH transmission overlapped in the radio resources and/or in the time would be performed, the prioritization for the PUSCH transmission may be considered. For example, for the PUSCH transmission, in a case that the UE 102 detects more than one DCI formats scheduling PUSCHs overlapped in the radio resources and/or in the time, the UE 102 may determine, based on the first indication, the priority for the PUSCH transmission. For example, the UE 102 may determine, based on a value of the priority indication (e.g., 2-bit information, 00: the lowest priority, 01: the lower priority, 10: the higher priority, 11: the highest priority), the priority for the PUSCH transmission.

[0133] Additionally or alternatively, the UE 102 may determine, based on the RNTI(s), the priority for the PUSCH transmission. For example, the PUSCH transmission corresponding to the PDCCH (i.e., the DCI format(s) for the uplink) with the CRC scrambled by the first RNTI may have the higher priority than the PUSCH transmission corresponding to the PDCCH with the CRC scrambled by the C-RNTI and/or the CS-RNTI. Here, the PUSCH transmission corresponding to the random access response grant may have the higher priority than the PUSCH transmission corresponding to the PDCCH with the CRC scrambled by the first RNTI, the C-RNTI, and/or the CS-RNTI. Also, the PUSCH transmission corresponding to the PDCCH with the CRC scrambled by the Temporary C-RNTI may have the higher priority than the PUSCH transmission corresponding to the PDCCH with the CRC scrambled by the first RNTI, the C-RNTI, and/or the CS-RNTI.

[0134] Additionally or alternatively, the UE 102 may determine, based on the DCI format(s), the priority for the PUSCH transmission. For example, the PUSCH transmission corresponding to the DCI format 0_Y may have the higher priority than the PUSCH transmission corresponding to the DCI format 0_1 and/or the DCI format 0_0. Additionally or alternatively, the PUSCH transmission corresponding to the DCI format 0_0 may have the higher priority than the PUSCH transmission corresponding to the DCI format 0_Y and/or the DCI format 0_1.

[0135] Additionally or alternatively, the UE 102 may determine, based on a detected order of the DCI format(s), the priority for the PUSCH transmission. For example, the PUSCH transmission corresponding to a later DCI format(s) (i.e., a later detected DCI format(s)) may have the higher priority than the PUSCH transmission corresponding to an earlier DCI format(s) (an earlier detected DCI format(s)). For example, for the PUSCH transmission, in a case that the UE 102 detects more than one DCI formats scheduling PUSCHs overlapped in the radio resources and/or in the time, the UE 102 may consider (e.g., assume, identify) that the later DCI format(s) has the higher

priority than the earlier DCI format(s).

[0136] Here, the UE 102 may perform in the time (e.g., in the time 709), based on the priority, the PUSCH transmission. For example, the UE 102 may perform the PUSCH transmission corresponding to the higher priority. For example, the UE 102 may stop (e.g., drop) the PUSCH transmission (e.g., ongoing PUSCH transmission) corresponding to the lower priority, and perform the PUSCH transmission corresponding to the higher priority (e.g., perform only the PUSCH transmission corresponding to the higher priority). Additionally or alternatively, the uplink data (e.g., the PUSCH transmission) corresponding to the lower priority may be punctured (e.g., and/or rate-matched) by (e.g., and/or for) the uplink data (e.g., the PUSCH transmission) corresponding to the higher priority. Namely, for a resource element mapping(s) (e.g., a PUCCH/a PUSCH resource element mapping(s)), a coded symbol(s) of the uplink data (e.g., a modulation coded symbol(s)) corresponding to the lower priority is punctured (e.g., overwritten) by a coded symbol(s) of the uplink data (e.g., a modulation coded symbol(s)) corresponding to the higher priority. Additionally or alternatively, for a resource element mapping(s) (e.g., a PUCCH/a PUSCH resource element mapping(s)), a coded symbol(s) of the uplink data corresponding to the lower priority is rate-matched (e.g., skipped) for a coded symbol(s) of the uplink data corresponding to the higher priority.

[0137] Here, the gNB 160 may transmit, by using the RRC message, third information used for configuring that the prioritization is performed (e.g., allowed, and/or enabled) for the PDSCH reception. For example, in a case that the third information is configured, the UE 102 may perform in the time (e.g., in the time 509), the PDSCH reception based on the priority. Here, the third information may include information used for configuring that more than one PDSCH receptions (e.g., simultaneous PDSCH receptions) in the time (e.g., in the time 509 (e.g., in a symbol(s), and/or in a slot(s))) is performed.

[0138] Also, the gNB 160 may transmit, by using the RRC message, fourth information used for configuring that the prioritization is performed for the HARQ-ACK transmission for the PDSCH. For example, in a case that the fourth information is configured, the UE 102 may perform in the time (e.g., in the time 609), the HARQ-ACK transmission for the PDSCH based on the priority. Here, the fourth information may include information used for configuring that more than one HARQ-ACK transmissions for the PDSCHs (e.g., simultaneous HARQ-ACK transmissions for the PDSCHs) in the time (e.g., in the time 609 (e.g., in a symbol(s), and/or in a slot(s))) is performed.

[0139] Also, the gNB 160 may transmit, by using the RRC message, fifth information used for configuring that the prioritization is performed for the PUSCH transmission. For example, in a case that the fifth information is configured, the UE 102 may perform in

the time (e.g., in the time 709), the PUSCH transmission based on the priority. Here, the fifth information may include information used for configuring that more than one PUSCH transmissions (e.g., simultaneous PUSCH transmissions) in the time (e.g., in the time 709 (e.g., in a symbol(s), and/or in a slot(s))) is performed.

[0140] Namely, the gNB 160 may separately configure for the UE 102 to perform the prioritization for the PDSCH reception, the HARQ-ACK transmission for the PDSCH, and/or the PUSCH transmission.

[0141] Additionally or alternatively, the gNB 160 may transmit, by using the RRC message, sixth information (i.e., single information) used for configuring that the prioritization for the PDSCH reception is performed and the prioritization for the HARQ-ACK transmission for the PDSCH is performed. Here, the sixth information may include information used for configuring more than one PDSCH receptions (e.g., simultaneous PDSCH receptions) in the time (e.g., in the time 509) are performed and more than one HARQ-ACK transmissions for the PDSCHs (e.g., simultaneous HARQ-ACK transmissions for the PDSCHs) in the time (e.g., in the time 609) are performed. Additionally or alternatively, the gNB 160 may transmit, by using the RRC message, seventh information (i.e., single information) used for configuring that the prioritization for the PDSCH reception is performed and the prioritization for the HARQ-ACK transmission for the PDSCH is performed and the prioritization for the PUSCH transmission is performed. Here, the seventh information may include information used for configuring more than one PDSCH receptions (e.g., simultaneous PDSCH receptions) in the time (e.g., in the time 509) are performed and more than one HARQ-ACK transmissions for the PDSCHs (e.g., simultaneous HARQ-ACK transmissions for the PDSCHs) in the time (e.g., in the time 609) are performed and more than one PUSCH transmissions (e.g., simultaneous PUSCH transmissions) in the time (e.g., in the time 709) are performed.

[0142] Namely, the gNB 160 may commonly configure for the UE 102 to perform the prioritization for the PDSCH reception, the HARQ-ACK transmission for the PDSCH, and/or the PUSCH transmission.

[0143] Here, the third information, the fourth information, the fifth information, the sixth information, and/or the seventh information described herein may be assumed to be included in a first configuration in some implementations for the sake of simple descriptions.

[0144] Here, the first configuration may be configured per serving cell. For example, the first configuration may be configured for each of serving cells (e.g., the primary cell and/or the one or more secondary cells). Additionally or alternatively, the first configuration may be configured per DL BWP. For example, the first configuration may be configured for each of DL BWPs (e.g., each of DL BWPs in a serving cell). Addi-

tionally or alternately, the first configuration may be configured per CORESET. For example, the first configuration may be configured for each of CORESETs. Here, the first configuration may be configured for the CORESET(s) except for the CORESET #0. Namely, the first configuration may not be configured for the CORESET #0. Additionally or alternatively, the first configuration may be configured per search space set. For example, the first configuration may be configured for each of search space sets. Here, the first configuration may be configured for the search space set(s) except for the search space set #0. Namely, the first configuration may not be configured for the search space set #0.

[0145] Also, the gNB 160 may transmit, by using the RRC message, eighth information used for configuring that the first indication is present for the DCI format(s) for the downlink. For example, in a case that the eight information is configured, the UE 102 may assume that the first indication (e.g., the priority indication) is present in the DCI format(s) for the downlink. Also, in a case that the eighth information is configured, the UE 102 may monitor the PDCCH (e.g., the PDCCH for the DCI format(s) for the downlink) with the CRC scrambled by the first indication (e.g., the first RNTI). Also, in a case that the eighth information is configured, the UE 102 may monitor the PDCCH for the DCI format 1_X.

[0146] Also, the gNB 160 may transmit, by using the RRC message, ninth information used for configuring that the first indication is present for the DCI format(s) for the uplink. For example, in a case that the ninth information is configured, the UE 102 may assume that the first indication (e.g., the priority indication) is present in the DCI format(s) for the uplink. Also, in a case that the ninth information is configured, the UE 102 may monitor the PDCCH (e.g., the PDCCH for the DCI format(s) for the uplink) with the CRC scrambled by the first indication (e.g., the first RNTI). Also, in a case that the ninth information is configured, the UE 102 may monitor the PDCCH for the DCI format 0_Y.

[0147] Namely, the gNB 160 may separately configure the presence of the first indication for the downlink (e.g., the DCI format(s) for the downlink, and/or the PDCCH for the DCI format(s) for the downlink) and the uplink (e.g., the DCI format(s) for the uplink, and/or the PDCCH for the DCI format(s) for the uplink).

[0148] Additionally or alternatively, the gNB 160 may transmit, by using the RRC message, tenth information (i.e., single information) used for configuring that the first indication is present for the DCI format(s) for the downlink and the DCI format(s) for the uplink. For example, in a case that the tenth information is configured, the UE 102 may assume that the first indication (e.g., the priority indicator) is present in the DCI format(s) for the downlink and the DCI format(s) for the uplink. Also, in a case that the tenth information is configured, the UE 102 may monitor the PDCCH for the DCI

format(s) for the downlink and the PDCCH for the DCI format(s) for the uplink. Also, in a case that the tenth information is configured, the UE 102 may monitor the PDCCH for the DCI format 1_X and the DCI format 0_Y.

[0149] Namely, the gNB 160 may commonly configure the presence of the first indication for the downlink (e.g., the DCI format(s) for the downlink, and/or the PDCCH for the DCI format(s) for the downlink) and the uplink (e.g., the DCI format(s) for the uplink, and/or the PDCCH for the DCI format(s) for the uplink).

[0150] Here, the eighth information, the ninth information, and/or the tenth information described herein may be assumed to be included in a second configuration in some implementations for the sake of simple descriptions.

[0151] Here, the second configuration may be configured per serving cell. For example, the second configuration may be configured for each of serving cells (e.g., the primary cell and/or the one or more secondary cells). Additionally or alternatively, the second configuration may be configured per DL BWP. For example, the second configuration may be configured for each of DL BWPs (e.g., each of DL BWPs in a serving cell). Additionally or alternately, the second configuration may be configured per CORESET. For example, the second configuration may be configured for each of CORESETs. Here, the second configuration may be configured for the CORESET(s) except for the CORESET #0. Namely, the second configuration may not be configured for the CORESET #0. Additionally or alternatively, the second configuration may be configured per search space set. For example, the second configuration may be configured for each of search space sets. Here, the second configuration may be configured for the search space set(s) except for the search space set #0. Namely, the second configuration may not be configured for the search space set #0.

[0152] Namely, the first indication may not be present for the DCI format(s) (e.g., for the downlink and/or for the uplink) detected in the CORESET #0. For example, the first indication (e.g., the priority indication) may not be present in the DCI format(s) (e.g., for the downlink and/or for the uplink) detected in the CORESET #0. Namely, in a case that the UE 102 detects the PDCCH for the DCI format(s) (e.g., for the downlink, and/or for the uplink) in the CORESET #0, the UE 102 may assume that the first indication (e.g., the priority indication) is not present in the DCI format(s) (e.g., for the downlink and/or for the uplink). Also, the PDCCH for the DCI format(s) (e.g., for the downlink and/or for the uplink) with the CRC scrambled by the first RNTI may not be transmitted (e.g., mapped, allocated) in the CORESET #0. Namely, for the CORESET #0, the UE 102 may not monitor the PDCCH for the DCI format(s) (e.g., for the downlink and/or for the uplink).

[0153] Namely, the first indication may be present for the DCI format(s) (e.g., for the downlink and/or for the uplink) detected in the CORESET(s) except for the CORESET

#0. For example, the first indication (e.g., the priority indication) may be present in the DCI format(s) (e.g., for the downlink and/or for the uplink) detected in the CORESET(s) except for the CORESET #0. Namely, in a case that the UE 102 detects the PDCCH for the DCI format(s) (e.g., for the downlink, and/or for the uplink) in the CORESET(s) except for the CORESET #0, the UE 102 may assume that the first indication (e.g., the priority indication) is present in the DCI format(s) (e.g., for the downlink and/or for the uplink). Also, the PDCCH for the DCI format(s) (e.g., for the downlink and/or for the uplink) with the CRC scrambled by the first RNTI may be transmitted (e.g., mapped, allocated) in the CORESET(s) except for the CORESET #0. Namely, for the CORESET(s) except for the CORESET #0, the UE 102 may monitor the PDCCH for the DCI format(s) (e.g., for the downlink and/or for the uplink).

[0154] Also, the first indication may not be present for the DCI format(s) (e.g., for the downlink and/or for the uplink) detected in the search space set #0. For example, the first indication (e.g., the priority indication) may not be present in the DCI format(s) (e.g., for the downlink and/or for the uplink) detected in the search space set #0. Namely, in a case that the UE 102 detects the PDCCH for the DCI format(s) (e.g., for the downlink, and/or for the uplink) in the search space set #0, the UE 102 may assume that the first indication (e.g., the priority indication) is not present in the DCI format(s) (e.g., for the downlink and/or for the uplink). Also, the PDCCH for the DCI format(s) (e.g., for the downlink and/or for the uplink) with the CRC scrambled by the first RNTI may not be transmitted (e.g., mapped, allocated) in the search space set #0. Namely, for the search space set #0, the UE 102 may not monitor the PDCCH for the DCI format(s) (e.g., for the downlink and/or for the uplink).

[0155] Namely, the first indication may be present for the DCI format(s) (e.g., for the downlink and/or for the uplink) detected in the search space set(s) except for the search space set #0. For example, the first indication (e.g., the priority indication) may be present in the DCI format(s) (e.g., for the downlink and/or for the uplink) detected in the search space set(s) except for the search space set #0. Namely, in a case that the UE 102 detects the PDCCH for the DCI format(s) (e.g., for the downlink, and/or for the uplink) in the search space set(s) except for the search space set #0, the UE 102 may assume that the first indication (e.g., the priority indication) is present in the DCI format(s) (e.g., for the downlink and/or for the uplink). Also, the PDCCH for the DCI format(s) (e.g., for the downlink and/or for the uplink) with the CRC scrambled by the first RNTI may be transmitted (e.g., mapped, allocated) the search space set(s) except for the search space set #0. Namely, for the search space set(s) except for the search space set #0, the UE 102 may monitor the PDCCH for the DCI format(s) (e.g., for the downlink and/or for the uplink).

[0156] Here, the PDSCH corresponding to the PDCCH (e.g., for the DCI format(s) for the

downlink) detected in the CORESET #0 may be considered as the highest priority. Namely, in a case that the UE 102 detects the PDCCH for the DCI format(s) for the downlink in the CORESET #0, the UE 102 may perform the corresponding PDSCH reception. Namely, regardless of the first indication, the PDSCH reception corresponding to the PDCCH detected in the CORESET #0 may be performed. For example, for a given DL BWP, in a case that a first PDSCH reception indicated by using a first PDCCH (e.g., for the DCI format(s) for the downlink) detected in the CORESET #0 and a second PDSCH reception indicated by using a second PDCCH (e.g., for the DCI format(s) for the downlink) detected in the CORESET #1 are overlapped in the radio resources and/or in the time (e.g., in the time 509), regardless of the first indication, the UE 102 may perform, in the radio resources and/or in the time (e.g., in the time 509), the first PDSCH reception indicated by using the first PDCCH detected in the CORESET #0.

[0157] Additionally or alternatively, the HARQ-ACK transmission for the PDSCH corresponding to the PDCCH (e.g., for the DCI format(s) for the downlink) detected in the CORESET #0 may be considered as the highest priority. Namely, in a case that the UE 102 detects the PDCCH for the DCI format(s) for the downlink in the CORESET #0, the UE 102 may perform the HARQ-ACK transmission for the PDSCH corresponding to the PDCCH detected in the CORESET "0". Namely, regardless of the first indication, the HARQ-ACK transmission for the PDSCH corresponding to the PDCCH detected in the CORESET #0 may be performed. For example, for a given DL BWP, in a case that a first HARQ-ACK transmission for a first PDSCH corresponding to a first PDCCH (e.g., for the DCI format(s) for the downlink) detected in the CORESET #0 and a second HARQ-ACK transmission for a second PDSCH corresponding to a second PDCCH (e.g., for the DCI format(s) for the downlink) detected in the CORESET #1 are overlapped in the radio resources and/or in the time (e.g., in the time 609), regardless of the first indication, the UE 102 may perform, in the radio resources and/or in the time (e.g., in the time 609), the first HARQ-ACK transmission for the first PDSCH corresponding to the first PDCCH detected in the CORESET #0.

[0158] Additionally or alternatively, the PUSCH transmission corresponding to the PDCCH (e.g., for the DCI format(s) for the uplink) detected in the CORESET #0 may be considered as the highest priority. Namely, in a case that the UE 102 detects the PDCCH for the DCI format(s) for the uplink in the CORESET #0, the UE 102 may perform the corresponding PUSCH transmission. Namely, regardless of the first indication, the PUSCH transmission corresponding to the PDCCH detected in the CORESET #0 may be performed. For example, for a given DL BWP, in a case that a first PUSCH transmission indicated by using a first PDCCH (e.g., for the DCI format(s) for the uplink) detected in the CORESET #0 and a second PUSCH

transmission indicated by using a second PDCCH (e.g., for the DCI format(s) for the uplink) detected in the CORESET #1 are overlapped in the radio resources and/or in the time (e.g., in the time 709), regardless of the first indication, the UE 102 may perform, in the radio resources and/or in the time (e.g., in the time 709), the first PUSCH transmission indicated by using the first PDCCH detected in the CORESET #0.

[0159] Additionally or alternatively, the UE 102 may determine, based on the index of the CORESET(s), the priority for the PDSCH reception. Namely, the index of the COREST(s) may be included in the first indication. For example, the PDSCH reception corresponding to the PDCCH (e.g., the DCI format(s) for the downlink) detected in the CORESET with the lower index may have the higher priority than the PDSCH reception corresponding to the PDCCH (e.g., the DCI format(s) for downlink) detected in the CORESET with the higher index. Here, the PDSCH reception corresponding to the PDCCH detected in the CORESET with the higher index may have the higher priority than the PDSCH reception corresponding to the PDCCH detected in the CORESET with the lower index. For example, for the PDSCH reception, in a case that the UE 102 detects more than one DCI formats scheduling PDSCHs overlapped in the radio resources and/or in the time (e.g., in the time 509), the UE 102 may consider (e.g., assume, identify) that the PDSCH reception corresponding to the DCI format (i.e., PDCCH) detected in the CORESET with the lower index (or the higher index) has the higher priority than the PDSCH reception corresponding to the DCI format (i.e., the PDCCH) detected in the CORESET with the higher index (or the lower index).

[0160] Namely, the PDSCH reception corresponding to the PDCCH detected in the CORESET with the lowest index (or the highest index) may be considered as the higher priority (e.g., the highest priority). Here, as described above, even if the PDSCH reception corresponding to the PDCCH detected in the CORESET with the lowest index (or the highest index) is considered as the higher priority (e.g., the highest priority), in a case that the UE 102 detects the PDCCH (e.g., for the DCI format(s) for the downlink) in the CORESET #0, the UE 102 may perform the PDSCH reception corresponding to the PDCCH detected in the CORESET #0. Namely, except for the PDSCH reception corresponding to the PDCCH detected in the CORESET #0, the PDSCH reception corresponding to the PDCCH detected in the CORESET with the lowest index (or the highest index) may be considered (e.g., defined, assumed, identified) as the higher priority (e.g., the highest priority). Namely, unless the PDSCH reception is corresponding to the PDCCH detected in the CORESET #0, the PDSCH reception corresponding to the PDCCH detected in the CORESET with the lowest index (or the highest index) may be considered (e.g., defined, assumed, identified) as

the higher priority (e.g., the highest priority).

[0161] Additionally or alternatively, the UE 102 may determine, based on the index of the CORESET(s), the priority for the HARQ-ACK transmission for the PDSCH. Namely, the index of the COREST(s) may be included in the first indication. For example, the HARQ-ACK transmission for the PDSCH corresponding to the PDCCH (e.g., the DCI format(s) for the downlink) detected in the CORESET with the lower index may have the higher priority than the HARQ-ACK transmission for the PDSCH corresponding to the PDCCH (e.g., the DCI format(s) for the downlink) detected in the CORESET with the higher index. Here, the HARQ-ACK transmission for the PDSCH corresponding to the PDCCH (e.g., the DCI format(s) for the downlink) detected in the CORESET with the higher index may have the higher priority than the HARQ-ACK transmission for the PDSCH corresponding to the PDCCH (e.g., the DCI format(s) for the downlink) detected in the CORESET with the lower index. For example, for the HARQ-ACK transmission for the PDSCH overlapped in the radio resources and/or in the time (e.g., in the time 609), the UE 102 may consider (e.g., assume, identify) that the HARQ-ACK transmission for the PDSCH corresponding to the DCI format (i.e., the PDCCH) detected in the CORESET with the lower index (or the higher index) has the higher priority than the HARQ-ACK transmission for the PDSCH corresponding to the DCI format (i.e., the PDCCH) detected in the CORESET with the higher index (or the lower index).

[0162] Namely, the HARQ-ACK transmission for the PDSCH corresponding to the PDCCH detected in the CORESET with the lowest index (or the highest index) may be considered as the higher priority (e.g., the highest priority). Here, as described above, even if the HARQ-ACK transmission for the PDSCH corresponding to the PDCCH detected in the CORESET with the lowest index (or the highest index) is considered as the higher priority (e.g., the highest priority), in a case that the UE 102 detects the PDCCH (e.g., for the DCI format(s) for the downlink) in the CORESET #0, the UE 102 may perform the HARQ-ACK transmission for the PDSCH corresponding to the PDCCH detected in the CORESET #0. Namely, except for the HARQ-ACK transmission for the PDSCH corresponding to the PDCCH detected in the CORESET #0, the HARQ-ACK transmission for the PDSCH corresponding to the PDCCH detected in the CORESET with the lowest index (or the highest index) may be considered (e.g., defined, assumed, identified) as the higher priority (e.g., the highest priority). Namely, unless the HARQ-ACK transmission is corresponding to the PDSCH (e.g., the PDSCH reception and/or the PDSCH transmission) indicated by using the PDCCH detected in the CORESET #0, the HARQ-ACK transmission corresponding to the PDSCH(e.g., the PDSCH reception and/or the PDSCH transmission) indicated by using the PDCCH detected in the CORESET with the lowest index (or the

highest index) may be considered (e.g., defined, assumed, identified) as the higher priority (e.g., the highest priority).

[0163] Additionally or alternatively, the UE 102 may determine, based on the index of the CORESET(s), the priority for the PUSCH transmission. Namely, the index of the COREST(s) may be included in the first indication. For example, the PUSCH transmission corresponding to the PDCCH (e.g., the DCI format(s) for uplink) detected in the CORESET with the lower index may have the higher priority than the PUSCH transmission corresponding to the PDCCH (e.g., the DCI format(s) for uplink) detected in the CORESET with the higher index. Here, the PUSCH transmission corresponding to the PDCCH detected in the CORESET with the higher index may have the higher priority than the PUSCH transmission corresponding to the PDCCH detected in the CORESET with the lower index. For example, for the PUSCH transmission overlapped in the radio resources and/or in the time (e.g., in the time 709), the UE 102 may consider (e.g., assume, identify) that the PUSCH transmission corresponding to the DCI format (i.e., PDCCH) detected in the CORESET with the lower index (or the higher index) has the higher priority than the PUSCH transmission corresponding to the DCI format (i.e., the PDCCH) detected in the CORESET with the higher index (or the lower index).

[0164] Namely, the PUSCH transmission corresponding to the PDCCH detected in the CORESET with the lowest index (or the highest index) may be considered as the higher priority (e.g., the highest priority). Here, as described above, even if the PUSCH transmission corresponding to the PDCCH detected in the CORESET with the lowest index (or the highest index) is considered as the higher priority (e.g., the highest priority), in a case that the UE 102 detects the PDCCH (e.g., for the DCI format(s) for the uplink) in the CORESET #0, the UE 102 may perform the PUSCH transmission corresponding to the PDCCH detected in the CORESET #0. Namely, except for the PUSCH transmission corresponding to the PDCCH detected in the CORESET #0, the PUSCH transmission corresponding to the PDCCH detected in the CORESET with the lowest index (or the highest index) may be considered (e.g., defined, assumed, identified) as the higher priority (e.g., the highest priority). Namely, unless the PUSCH transmission is corresponding to the PDCCH detected in the CORESET #0, the PUSCH transmission corresponding to the PDCCH detected in the CORESET with the lowest index (or the highest index) may be considered (e.g., defined, assumed, identified) as the higher priority (e.g., the highest priority).

[0165] Additionally or alternatively, the PDSCH corresponding to the PDCCH (e.g., for the DCI format(s) for the downlink) detected in the search space set #0 may be considered as the highest priority. Namely, in a case that the UE 102 detects the PDCCH for the DCI format(s) for the downlink in the search space set #0, the UE 102 may perform the

corresponding PDSCH reception. Namely, regardless of the first indication, the PDSCH reception corresponding to the PDCCH detected in the search space set #0 may be performed. For example, for a given DL BWP, in a case that a first PDSCH reception indicated by using a first PDCCH (e.g., for the DCI format(s) for the downlink) detected in the search space set #0 and a second PDSCH reception indicated by using a second PDCCH (e.g., for the DCI format(s) for the downlink) detected in the search space set #1 are overlapped in the radio resources and/or in the time (e.g., in the time 509), regardless of the first indication, the UE 102 may perform, in the radio resources and/or in the time (e.g., in the time 509), the first PDSCH reception indicated by using the first PDCCH detected in the search space set #0.

[0166] Additionally or alternatively, the HARQ-ACK transmission for the PDSCH corresponding to the PDCCH (e.g., for the DCI format(s) for the downlink) detected in the search space set #0 may be considered as the highest priority. Namely, in a case that the UE 102 detects the PDCCH for the DCI format(s) for the downlink in the search space set #0, the UE 102 may perform the HARQ-ACK transmission for the PDSCH corresponding to the PDCCH detected in the search space set #0. Namely, regardless of the first indication, the HARQ-ACK transmission for the PDSCH corresponding to the PDCCH detected in the search space set #0 may be performed. For example, for a given DL BWP, in a case that a first HARQ-ACK transmission for a first PDSCH corresponding to a first PDCCH (e.g., for the DCI format(s) for the downlink) detected in the search space set #0 and a second HARQ-ACK transmission for a second PDSCH corresponding to a second PDCCH (e.g., for the DCI format(s) for the downlink) detected in the search space set #1 are overlapped in the radio resources and/or in the time (e.g., in the time 609), regardless of the first indication, the UE 102 may perform, in the radio resources and/or in the time (e.g., in the time 609), the first HARQ-ACK transmission for the first PDSCH corresponding to the first PDCCH detected in the search space set #0.

[0167] Additionally or alternatively, the PUSCH transmission corresponding to the PDCCH (e.g., for the DCI format(s) for the uplink) detected in the search space set #0 may be considered as the highest priority. Namely, in a case that the UE 102 detects the PDCCH for the DCI format(s) for the uplink in the search space set #0, the UE 102 may perform the corresponding PUSCH transmission. Namely, regardless of the first indication, the PUSCH transmission corresponding to the PDCCH detected in the search space set #0 may be performed. For example, for a given DL BWP, in a case that a first PUSCH transmission indicated by using a first PDCCH (e.g., for the DCI format(s) for the uplink) detected in the search space set #0 and a second PUSCH transmission indicated by using a second PDCCH (e.g., for the DCI format(s) for the uplink) detected in the search space set #1 are overlapped in the radio resources and/or

in the time (e.g., in the time 709), regardless of the first indication, the UE 102 may perform, in the radio resources and/or in the time (e.g., in the time 709), the first PUSCH transmission indicated by using the first PDCCH detected in the search space set #0.

[0168] Additionally or alternatively, the UE 102 may determine, based on the index of the search space set(s), the priority for the PDSCH reception. Namely, the index of the search space set(s) may be included in the first indication. For example, the PDSCH reception corresponding to the PDCCH (e.g., the DCI format(s) for downlink) detected in the search space set with the lower index may have the higher priority than the PDSCH reception corresponding to the PDCCH (e.g., the DCI format(s) for downlink) detected in the search space set with the higher index. Here, the PDSCH reception corresponding to the PDCCH detected in the search space set with the higher index may have the higher priority than the PDSCH reception corresponding to the PDCCH detected in the search space set with the lower index. For example, for the PDSCH reception, in a case that the UE 102 detects more than one DCI formats scheduling PDSCH overlapped in the radio resources and/or in the time (e.g., in the time 509), the UE 102 may consider (e.g., assume, identify) that the PDSCH reception corresponding to the DCI format (i.e., PDCCH) detected in the search space set with the lower index (or the higher index) has the higher priority than the PDSCH reception corresponding to the DCI format (i.e., the PDCCH) detected in the search space set with the higher index (or lower index).

[0169] Namely, the PDSCH reception corresponding to the PDCCH detected in the search space set with the lowest index (or the highest index) may be considered as the higher priority (e.g., the highest priority). Here, as described above, even if the PDSCH reception corresponding to the PDCCH detected in the search space set with the lowest index (or the highest index) is considered as the higher priority (e.g., the highest priority), in a case that the UE 102 detects the PDCCH (e.g., for the DCI format(s) for the downlink) in the search space set #0, the UE 102 may perform the PDSCH reception corresponding to the PDCCH detected in the search space set #0. Namely, except for the PDSCH reception corresponding to the PDCCH detected in the search space set #0, the PDSCH reception corresponding to the PDCCH detected in the search space set with the lowest index (or the highest index) may be considered (e.g., defined, assumed, identified) as the higher priority (e.g., the highest priority). Namely, unless the PDSCH reception is corresponding to the PDCCH detected in the search space set #0, the PDSCH reception corresponding to the PDCCH detected in the search space set with the lowest index (or the highest index) may be considered (e.g., defined, assumed, identified) as the higher priority (e.g., the highest priority).

[0170] Additionally or alternatively, the UE 102 may determine, based on the index of the

search space set(s), the priority for the HARQ-ACK transmission for the PDSCH. Namely, the index of the search space(s) may be included in the first indication. For example, the HARQ-ACK transmission for the PDSCH corresponding to the PDCCH (e.g., the DCI format(s) for the downlink) detected in the search space set with the lower index may have the higher priority than the HARQ-ACK transmission for the PDSCH corresponding to the PDCCH (e.g., the DCI format(s) for the downlink) detected in the search space set with the higher index. Here, the HARQ-ACK transmission for the PDSCH corresponding to the PDCCH (e.g., the DCI format(s) for the downlink) detected in the search space set with the higher index may have the higher priority than the HARQ-ACK transmission for the PDSCH corresponding to the PDCCH (e.g., the DCI format(s) for the downlink) detected in the search space set with the lower index. For example, for the HARQ-ACK transmission for the PDSCH overlapped in the radio resources and/or in the time (e.g., in the time 609), the UE 102 may consider (e.g., assume, identify) that the HARQ-ACK transmission for the PDSCH corresponding to the DCI format (i.e., the PDCCH) detected in the search space set with the lower index (or the higher index) has the higher priority than the HARQ-ACK transmission for the PDSCH corresponding to the DCI format (i.e., the PDCCH) detected in the search space set with the higher index (or the lower index).

[0171] Namely, the HARQ-ACK transmission for the PDSCH corresponding to the PDCCH detected in the search space set with the lowest index (or the highest index) may be considered as the higher priority (e.g., the highest priority). Here, as described above, even if the HARQ-ACK transmission for the PDSCH corresponding to the PDCCH detected in the search space set with the lowest index (or the highest index) is considered as the higher priority (e.g., the highest priority), in a case that the UE 102 detects the PDCCH (e.g., for the DCI format(s) for the downlink) in the search space set #0, the UE 102 may perform the HARQ-ACK transmission for the PDSCH corresponding to the PDCCH detected in the search space set #0. Namely, except for the HARQ-ACK transmission for the PDSCH corresponding to the PDCCH detected in the search space set #0, the HARQ-ACK transmission for the PDSCH corresponding to the PDCCH detected in the search space set with the lowest index (or the highest index) may be considered (e.g., defined, assumed, identified) as the higher priority (e.g., the highest priority). Namely, unless the HARQ-ACK transmission is corresponding to the PDSCH (e.g., the PDSCH reception and/or the PDSCH transmission) indicated by using the PDCCH detected in the search space set #0, the HARQ-ACK transmission corresponding to the PDSCH (e.g., the PDSCH reception and/or the PDSCH transmission) indicated by using the PDCCH detected in the search space set with the lowest index (or the highest index) may be considered (e.g., defined, assumed, identified) as the higher priority (e.g., the highest priority).

[0172] Additionally or alternatively, the UE 102 may determine, based on the index of the search space set(s), the priority for the PUSCH transmission. Namely, the index of the search space set(s) may be included in the first indication. For example, the PUSCH transmission corresponding to the PDCCH (e.g., the DCI format(s) for uplink) detected in the search space set with the lower index may have the higher priority than the PUSCH transmission corresponding to the PDCCH (e.g., the DCI format(s) for uplink) detected in the search space set with the higher index. Here, the PUSCH transmission corresponding to the PDCCH detected in the search space set with the higher index may have the higher priority than the PUSCH transmission corresponding to the PDCCH detected in the search space set with the lower index. For example, for the PUSCH transmission overlapped in the radio resources and/or in the time (e.g., in the time 709), the UE 102 may consider (e.g., assume, identify) that the PUSCH transmission corresponding to the DCI format (i.e., PDCCH) detected in the search space set with the lower index (or the highest index) has the higher priority than the PUSCH transmission corresponding to the DCI format (i.e., the PDCCH) detected in the search space set with the higher index (or the lowest index).

[0173] Namely, the PUSCH transmission corresponding to the PDCCH detected in the search space set with the lowest index (or the highest index) may be considered as the higher priority (e.g., the highest priority). Here, as described above, even if the PUSCH transmission corresponding to the PDCCH detected in the search space set with the lowest index (or the highest index) is considered as the higher priority (e.g., the highest priority), in a case that the UE 102 detects the PDCCH (e.g., for the DCI format(s) for the uplink) in the search space set #0, the UE 102 may perform the PUSCH transmission corresponding to the PDCCH detected in the search space set #0. Namely, except for the PUSCH transmission corresponding to the PDCCH detected in the search space set #0, the PUSCH transmission corresponding to the PDCCH detected in the search space set with the lowest index (the highest index) may be considered (e.g., defined, assumed, identified) as the higher priority (e.g., the highest priority). Namely, unless the PUSCH transmission is corresponding to the PDCCH detected in the search space set #0, the PUSCH transmission corresponding to the PDCCH detected in the search space set with the lowest index (the highest index) may be considered (e.g., defined, assumed, identified) as the higher priority (e.g., the highest priority).

[0174] Figure 8 illustrates various components that may be utilized in a UE 802. The UE 802 described in connection with Figure 8 may be implemented in accordance with the UE 102 described in connection with Figure 1. The UE 802 includes a processor 803 that controls operation of the UE 802. The processor 803 may also be referred to as a central processing unit (CPU). Memory 805, which may include read-only memory (ROM), random access memory (RAM), a combination of the two or any type of

device that may store information, provides instructions 807a and data 809a to the processor 803. A portion of the memory 805 may also include non-volatile random access memory (NVRAM). Instructions 807b and data 809b may also reside in the processor 803. Instructions 807b and/or data 809b loaded into the processor 803 may also include instructions 807a and/or data 809a from memory 805 that were loaded for execution or processing by the processor 803. The instructions 807b may be executed by the processor 803 to implement the methods described herein.

[0175] The UE 802 may also include a housing that contains one or more transmitters 858 and one or more receivers 820 to allow transmission and reception of data. The transmitter(s) 858 and receiver(s) 820 may be combined into one or more transceivers 818. One or more antennas 822a-n are attached to the housing and electrically coupled to the transceiver 818.

[0176] The various components of the UE 802 are coupled together by a bus system 811, which may include a power bus, a control signal bus and a status signal bus, in addition to a data bus. However, for the sake of clarity, the various buses are illustrated in Figure 8 as the bus system 811. The UE 802 may also include a digital signal processor (DSP) 813 for use in processing signals. The UE 802 may also include a communications interface 815 that provides user access to the functions of the UE 802. The UE 802 illustrated in Figure 8 is a functional block diagram rather than a listing of specific components.

[0177] Figure 9 illustrates various components that may be utilized in a gNB 960. The gNB 960 described in connection with Figure 9 may be implemented in accordance with the gNB 160 described in connection with Figure 1. The gNB 960 includes a processor 903 that controls operation of the gNB 960. The processor 903 may also be referred to as a central processing unit (CPU). Memory 905, which may include read-only memory (ROM), random access memory (RAM), a combination of the two or any type of device that may store information, provides instructions 907a and data 909a to the processor 903. A portion of the memory 905 may also include non-volatile random access memory (NVRAM). Instructions 907b and data 909b may also reside in the processor 903. Instructions 907b and/or data 909b loaded into the processor 903 may also include instructions 907a and/or data 909a from memory 905 that were loaded for execution or processing by the processor 903. The instructions 907b may be executed by the processor 903 to implement the methods described herein.

[0178] The gNB 960 may also include a housing that contains one or more transmitters 917 and one or more receivers 978 to allow transmission and reception of data. The transmitter(s) 917 and receiver(s) 978 may be combined into one or more transceivers 976. One or more antennas 980a-n are attached to the housing and electrically coupled to the transceiver 976.

[0179] The various components of the gNB 960 are coupled together by a bus system 911, which may include a power bus, a control signal bus and a status signal bus, in addition to a data bus. However, for the sake of clarity, the various buses are illustrated in Figure 9 as the bus system 911. The gNB 960 may also include a digital signal processor (DSP) 913 for use in processing signals. The gNB 960 may also include a communications interface 915 that provides user access to the functions of the gNB 960. The gNB 960 illustrated in Figure 9 is a functional block diagram rather than a listing of specific components.

[0180] Figure 10 is a block diagram illustrating one implementation of a UE 1002 in which one or more of the systems and/or methods described herein may be implemented. The UE 1002 includes transmit means 1058, receive means 1020 and control means 1024. The transmit means 1058, receive means 1020 and control means 1024 may be configured to perform one or more of the functions described in connection with Figure 1 above. Figure 8 above illustrates one example of a concrete apparatus structure of Figure 10. Other various structures may be implemented to realize one or more of the functions of Figure 1. For example, a DSP may be realized by software.

[0181] Figure 11 is a block diagram illustrating one implementation of a gNB 1160 in which one or more of the systems and/or methods described herein may be implemented. The gNB 1160 includes transmit means 1117, receive means 1178 and control means 1182. The transmit means 1117, receive means 1178 and control means 1182 may be configured to perform one or more of the functions described in connection with Figure 1 above. Figure 9 above illustrates one example of a concrete apparatus structure of Figure 11. Other various structures may be implemented to realize one or more of the functions of Figure 1. For example, a DSP may be realized by software.

[0182] Figure 12 is a block diagram illustrating one implementation of a gNB 1260. The gNB 1260 may be an example of the gNB 160 described in connection with Figure 1. The gNB 1260 may include a higher layer processor 1223, a DL transmitter 1225, a UL receiver 1233, and one or more antenna 1231. The DL transmitter 1225 may include a PDCCH transmitter 1227 and a PDSCH transmitter 1229. The UL receiver 1233 may include a PUCCH receiver 1235 and a PUSCH receiver 1237.

[0183] The higher layer processor 1223 may manage physical layer's behaviors (the DL transmitter's and the UL receiver's behaviors) and provide higher layer parameters to the physical layer. The higher layer processor 1223 may obtain transport blocks from the physical layer. The higher layer processor 1223 may send/acquire higher layer messages such as an RRC message and MAC message to/from a UE's higher layer. The higher layer processor 1223 may provide the PDSCH transmitter transport blocks and provide the PDCCH transmitter transmission parameters related to the transport blocks.

[0184] The DL transmitter 1225 may multiplex downlink physical channels and downlink physical signals (including reservation signal) and transmit them via transmission antennas 1231. The UL receiver 1233 may receive multiplexed uplink physical channels and uplink physical signals via receiving antennas 1231 and de-multiplex them. The PUCCH receiver 1235 may provide the higher layer processor 1223 UCI. The PUSCH receiver 1237 may provide the higher layer processor 1223 received transport blocks.

[0185] Figure 13 is a block diagram illustrating one implementation of a UE 1302. The UE 1302 may be an example of the UE 102 described in connection with Figure 1. The UE 1302 may include a higher layer processor 1323, a UL transmitter 1351, a DL receiver 1343, and one or more antenna 1331. The UL transmitter 1351 may include a PUCCH transmitter 1353 and a PUSCH transmitter 1355. The DL receiver 1343 may include a PDCCH receiver 1345 and a PDSCH receiver 1347.

[0186] The higher layer processor 1323 may manage physical layer's behaviors (the UL transmitter's and the DL receiver's behaviors) and provide higher layer parameters to the physical layer. The higher layer processor 1323 may obtain transport blocks from the physical layer. The higher layer processor 1323 may send/acquire higher layer messages such as an RRC message and MAC message to/from a UE's higher layer. The higher layer processor 1323 may provide the PUSCH transmitter transport blocks and provide the PUCCH transmitter 1353 UCI.

[0187] The DL receiver 1343 may receive multiplexed downlink physical channels and downlink physical signals via receiving antennas 1331 and de-multiplex them. The PDCCH receiver 1345 may provide the higher layer processor 1323 DCI. The PDSCH receiver 1347 may provide the higher layer processor 1323 received transport blocks.

[0188] Figure 14 is a flow diagram illustrating a communication method 1400 by a UE 102. The UE 102 may receive 1402 a radio resource control (RRC) message including information used for configuring that a priority indication is present in a downlink control information (DCI) format. The DCI format may be used for scheduling of a physical downlink shared channel (PDSCH). The priority indication may be used for indicating a priority for a hybrid automatic repeat request-acknowledgment (HARQ-ACK) transmission for the PDSCH.

[0189] The UE 102 may perform 1404, based on the priority, the HARQ-ACK transmission for the PDSCH. The information may be configured for each control resource sets (CORESETs) except for a control resource set (CORESET) with an index "0".

[0190] Figure 15 is a flow diagram illustrating a communication method 1500 by a base station apparatus (gNB) 160. The gNB 160 may transmit 1502 an RRC message including information used for configuring that a priority indication is present in a DCI format. The DCI format may be used for scheduling of a PDSCH. The priority in-

dication may be used for indicating a priority for a HARQ-ACK transmission for the PDSCH.

[0191] The gNB 160 may perform 1504, based on the priority, the HARQ-ACK reception for the PDSCH. The information may be configured for each CORESETs except for a CORESET with an index "0".

[0192] As described herein, some methods for the UL transmissions may be applied (e.g., specified). Here, the combination of one or more of the some methods described herein may be applied for the UL transmission. The combination of the one or more of the some methods described herein may not be precluded in the described systems and methods.

[0193] It should be noted that names of physical channels described herein are examples. The other names such as "NRPDCCH, NRPDSCH, NRPUCCH and NRPUSCH," "new Generation-(G)PDCCH, GPDSCH, GPUCCH and GPUSCH" or the like can be used.

[0194] The term "computer-readable medium" refers to any available medium that can be accessed by a computer or a processor. The term "computer-readable medium," as used herein, may denote a computer- and/or processor-readable medium that is non-transitory and tangible. By way of example and not limitation, a computer-readable or processor-readable medium may comprise RAM, ROM, EEPROM, CD-ROM or other optical disk storage, magnetic disk storage or other magnetic storage devices, or any other medium that can be used to carry or store desired program code in the form of instructions or data structures and that can be accessed by a computer or processor. Disk and disc, as used herein, includes compact disc (CD), laser disc, optical disc, digital versatile disc (DVD), floppy disk and Blu-ray® disc where disks usually reproduce data magnetically, while discs reproduce data optically with lasers.

[0195] It should be noted that one or more of the methods described herein may be implemented in and/or performed using hardware. For example, one or more of the methods described herein may be implemented in and/or realized using a chipset, an application-specific integrated circuit (ASIC), a large-scale integrated circuit (LSI) or integrated circuit, etc.

[0196] Each of the methods disclosed herein comprises one or more steps or actions for achieving the described method. The method steps and/or actions may be interchanged with one another and/or combined into a single step without departing from the scope of the claims. In other words, unless a specific order of steps or actions is required for proper operation of the method that is being described, the order and/or use of specific steps and/or actions may be modified without departing from the scope of the claims.

[0197] It is to be understood that the claims are not limited to the precise configuration and components illustrated above. Various modifications, changes and variations may be

made in the arrangement, operation and details of the systems, methods and apparatus described herein without departing from the scope of the claims.

[0198] A program running on the gNB 160 or the UE 102 according to the described systems and methods is a program (a program for causing a computer to operate) that controls a CPU and the like in such a manner as to realize the function according to the described systems and methods. Then, the information that is handled in these apparatuses is temporarily stored in a RAM while being processed. Thereafter, the information is stored in various ROMs or HDDs, and whenever necessary, is read by the CPU to be modified or written. As a recording medium on which the program is stored, among a semiconductor (for example, a ROM, a nonvolatile memory card, and the like), an optical storage medium (for example, a DVD, a MO, a MD, a CD, a BD and the like), a magnetic storage medium (for example, a magnetic tape, a flexible disk and the like) and the like, any one may be possible. Furthermore, in some cases, the function according to the described systems and methods described herein is realized by running the loaded program, and in addition, the function according to the described systems and methods is realized in conjunction with an operating system or other application programs, based on an instruction from the program.

[0199] Furthermore, in a case where the programs are available on the market, the program stored on a portable recording medium can be distributed or the program can be transmitted to a server computer that connects through a network such as the Internet. In this case, a storage device in the server computer also is included. Furthermore, some or all of the gNB 160 and the UE 102 according to the systems and methods described herein may be realized as an LSI that is a typical integrated circuit. Each functional block of the gNB 160 and the UE 102 may be individually built into a chip, and some or all functional blocks may be integrated into a chip. Furthermore, a technique of the integrated circuit is not limited to the LSI, and an integrated circuit for the functional block may be realized with a dedicated circuit or a general-purpose processor. Furthermore, if with advances in a semiconductor technology, a technology of an integrated circuit that substitutes for the LSI appears, it is also possible to use an integrated circuit to which the technology applies.

[0200] Moreover, each functional block or various features of the base station device and the terminal device used in each of the aforementioned embodiments may be implemented or executed by a circuitry, which is typically an integrated circuit or a plurality of integrated circuits. The circuitry designed to execute the functions described in the present specification may comprise a general-purpose processor, a digital signal processor (DSP), an application specific or general application integrated circuit (ASIC), a field programmable gate array (FPGA), or other programmable logic devices, discrete gates or transistor logic, or a discrete hardware component, or a com-

bination thereof. The general-purpose processor may be a microprocessor, or alternatively, the processor may be a conventional processor, a controller, a microcontroller, or a state machine. The general-purpose processor or each circuit described herein may be configured by a digital circuit or may be configured by an analogue circuit. Further, when a technology of making into an integrated circuit superseding integrated circuits at the present time appears due to advancement of a semiconductor technology, the integrated circuit by this technology is also able to be used.

[0201] As used herein, the term "and/or" should be interpreted to mean one or more items. For example, the phrase "A, B and/or C" should be interpreted to mean any of: only A, only B, only C, A and B (but not C), B and C (but not A), A and C (but not B), or all of A, B, and C. As used herein, the phrase "at least one of" should be interpreted to mean one or more items. For example, the phrase "at least one of A, B and C" or the phrase "at least one of A, B or C" should be interpreted to mean any of: only A, only B, only C, A and B (but not C), B and C (but not A), A and C (but not B), or all of A, B, and C. As used herein, the phrase "one or more of" should be interpreted to mean one or more items. For example, the phrase "one or more of A, B and C" or the phrase "one or more of A, B or C" should be interpreted to mean any of: only A, only B, only C, A and B (but not C), B and C (but not A), A and C (but not B), or all of A, B, and C.

[0202] <Cross Reference>

This Nonprovisional application claims priority under 35 U.S.C. § 119 on provisional Application No. 62,823,238 on March 25 2019, the entire contents of which are hereby incorporated by reference.

[0203] What is claimed is:

Claims

[Claim 1] A user equipment comprising:
receiving circuitry configured to receive a radio resource control (RRC) message including information used for configuring that a priority indication is present in a downlink control information (DCI) format, the DCI format being used for scheduling of a physical downlink shared channel (PDSCH), the priority indication being used for indicating a priority for a hybrid automatic repeat request-acknowledgment (HARQ-ACK) transmission for the PDSCH; and
transmitting circuitry configured to perform, based on the priority, the HARQ-ACK transmission for the PDSCH, wherein
the information is configured for each control resource sets (CORESETs) except for a control resource set (CORESET) with an index "0".

[Claim 2] A base station apparatus comprising:
transmitting circuitry configured to transmit a radio resource control (RRC) message including information used for configuring that a priority indication is present in a downlink control information (DCI) format, the DCI format being used for scheduling of a physical downlink shared channel (PDSCH), the priority indication being used for indicating a priority for a hybrid automatic repeat request-acknowledgment (HARQ-ACK) transmission for the PDSCH; and
receiving circuitry configured to perform, based on the priority, the HARQ-ACK reception for the PDSCH, wherein
the information is configured for each control resource sets (CORESETs) except for a control resource set (CORESET) with an index "0".

[Claim 3] A communication method of a user equipment comprising:
receiving a radio resource control (RRC) message including information used for configuring that a priority indication is present in a downlink control information (DCI) format, the DCI format being used for scheduling of a physical downlink shared channel (PDSCH), the priority indication being used for indicating a priority for a hybrid automatic repeat request-acknowledgment (HARQ-ACK) transmission for the PDSCH; and
performing, based on the priority, the HARQ-ACK transmission for the PDSCH, wherein

the information is configured for each control resource sets (CORESETs) except for a control resource set (CORESET) with an index "0".

[Claim 4] A communication method of a base station apparatus comprising:

transmitting a radio resource control (RRC) message including information used for configuring that a priority indication is present in a downlink control information (DCI) format, the DCI format being used for scheduling of a physical downlink shared channel (PDSCH), the priority indication being used for indicating a priority for a hybrid automatic repeat request-acknowledgment (HARQ-ACK) transmission for the PDSCH; and

performing, based on the priority, the HARQ-ACK reception for the PDSCH, wherein

the information is configured for each control resource sets (CORESETs) except for a control resource set (CORESET) with an index "0".

[Fig. 1]

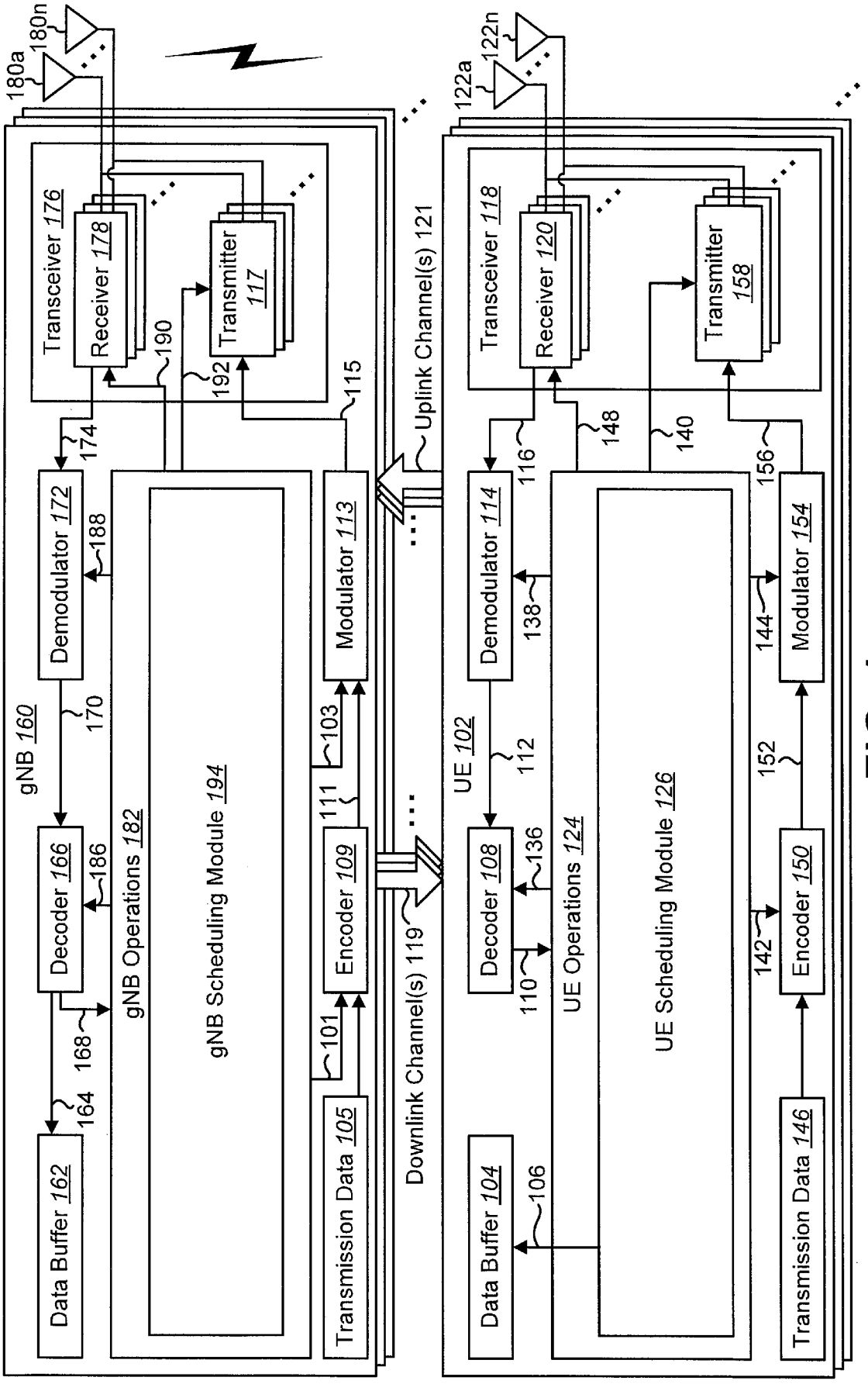
180a
180n
122a
122n
Transceiver 176
Receiver 178
Transmitter 117
Transceiver 118
Receiver 120
Transmitter 158
190
192
115
174
Uplink Channel(s) 121
116
148
140
156
Demodulator 172
188
Modulator 113
Demodulator 114
138
144
Modulator 154
gNB 160
170
103
111
UE 102
112
152
Decoder 166
186
gNB Operations 182
gNB Scheduling Module 194
Encoder 109
Decoder 108
136
UE Operations 124
UE Scheduling Module 126
Encoder 150
142
168
101
Downlink Channel(s) 119
110
164
Data Buffer 162
Transmission Data 105
Data Buffer 104
106
Transmission Data 146

FIG. 1

[Fig. 2]

Supported Transmission Numerologies 201

μ	$\Delta f = 2^{\mu} \cdot 15$[kHz]	Cyclic prefix
0	15	Normal
1	30	Normal
2	60	Normal, Extended
3	120	Normal
4	240	Normal
5	480	Normal

Number of OFDM Symbols Per Slot 203

μ	Slot configuration						
	0			1			
	N^{slot}_{symb}	$N^{frame,\mu}_{slot}$	$N^{subframe,\mu}_{slot}$	N^{slot}_{symb}	$N^{frame,\mu}_{slot}$	$N^{subframe,\mu}_{slot}$
0	14	10	1	7	20	2
1	14	20	2	7	40	4
2	14	40	4	7	80	8
3	14	80	8	-	-	-
4	14	160	16	-	-	-
5	14	320	32	-	-	-

FIG. 2

[Fig. 3]

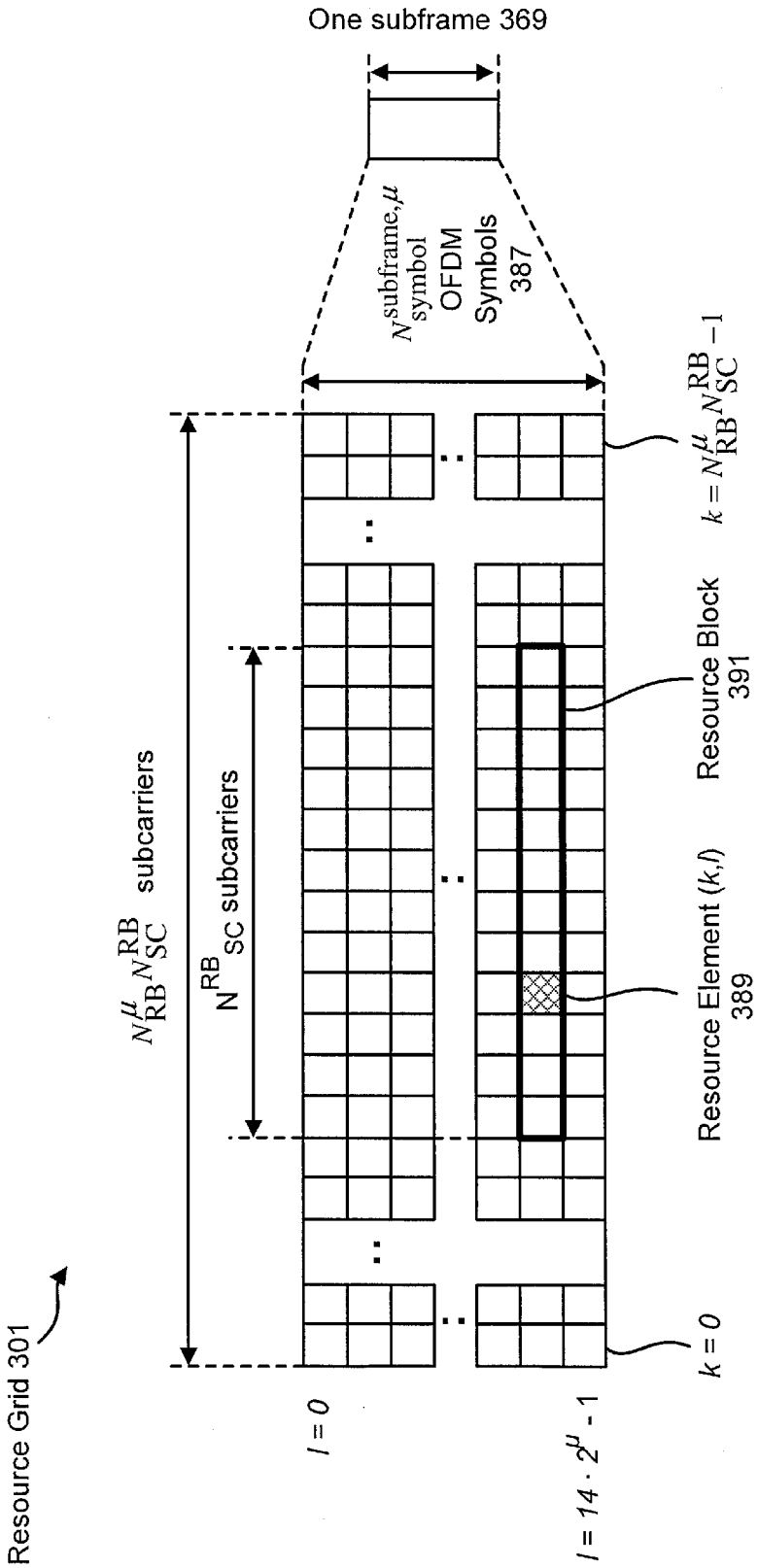
One subframe 369
$N^{subframe,\mu}_{symbol}$ OFDM Symbols 387
$N^{\mu}_{RB}N^{RB}_{SC}$ subcarriers
N^{RB}_{SC} subcarriers
Resource Block 391
Resource Element (k,l) 389
Resource Grid 301
$k = N^{\mu}_{RB}N^{RB}_{SC} - 1$
k = 0
l = 0
$l = 14 \cdot 2^{\mu} - 1$

FIG. 3

[Fig. 4]

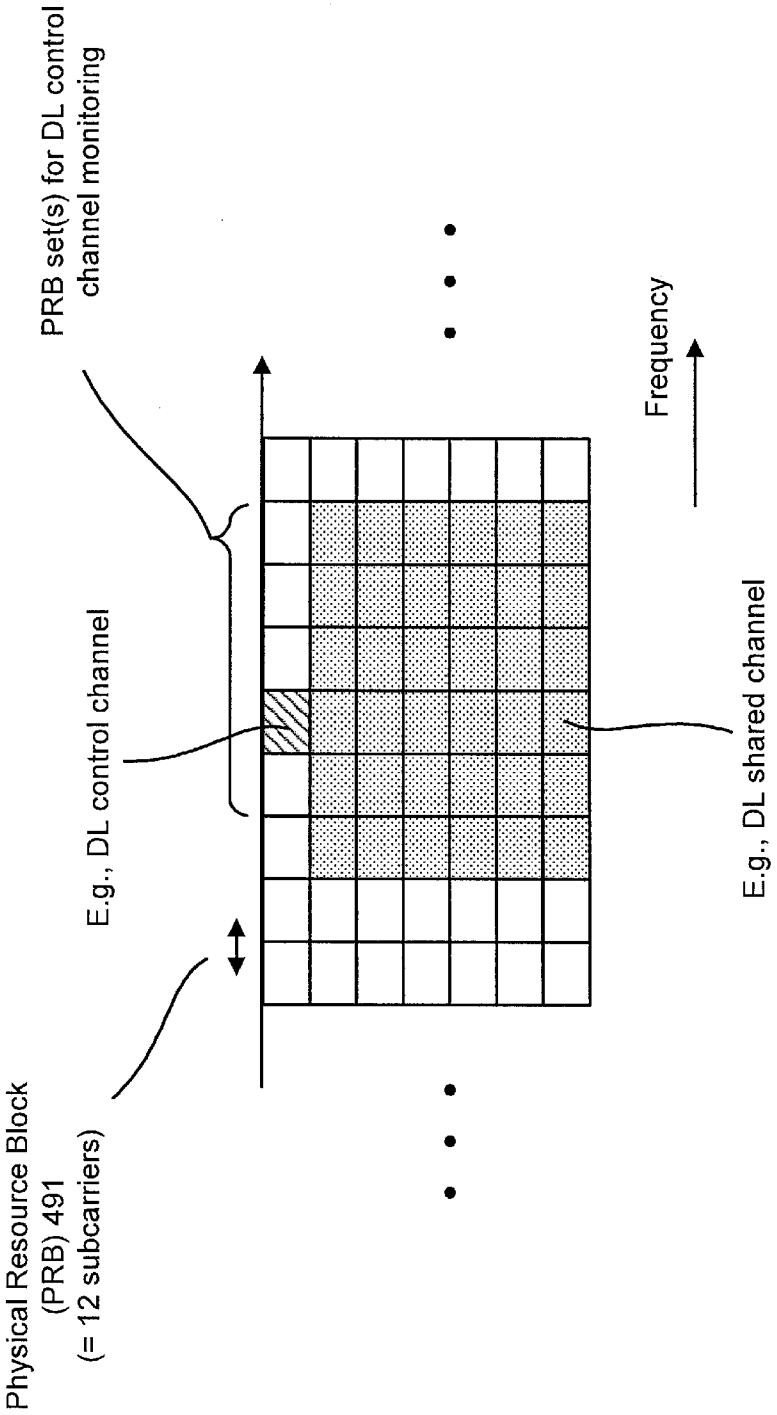
PRB set(s) for DL control channel monitoring
Frequency
E.g., DL control channel
E.g., DL shared channel
Physical Resource Block (PRB) 491 (= 12 subcarriers)

FIG. 4

[Fig. 5]

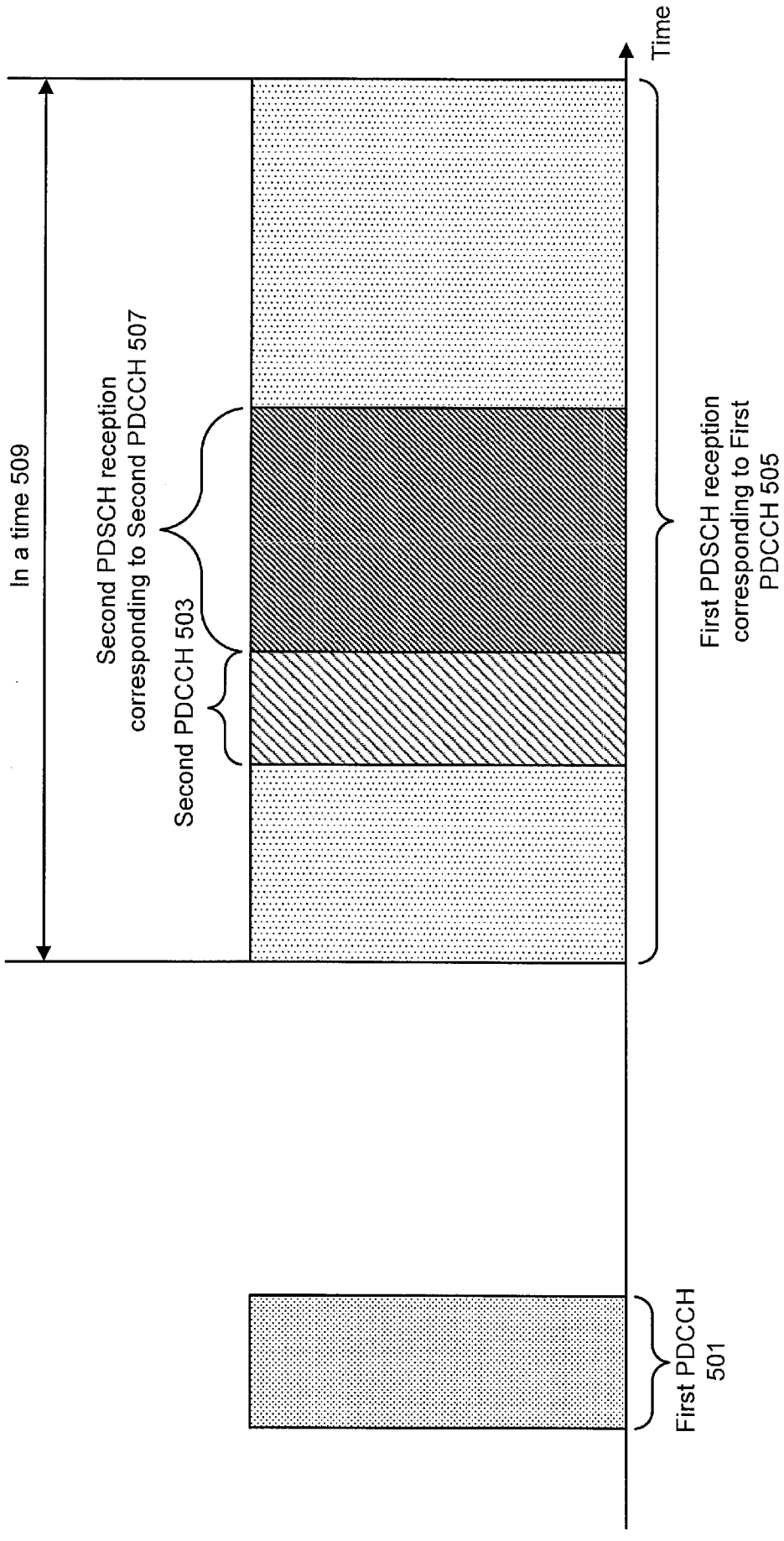
Time
In a time 509
Second PDSCH reception corresponding to Second PDCCH 507
Second PDCCH 503
First PDSCH reception corresponding to First PDCCH 505
First PDCCH 501

FIG. 5

[Fig. 6]

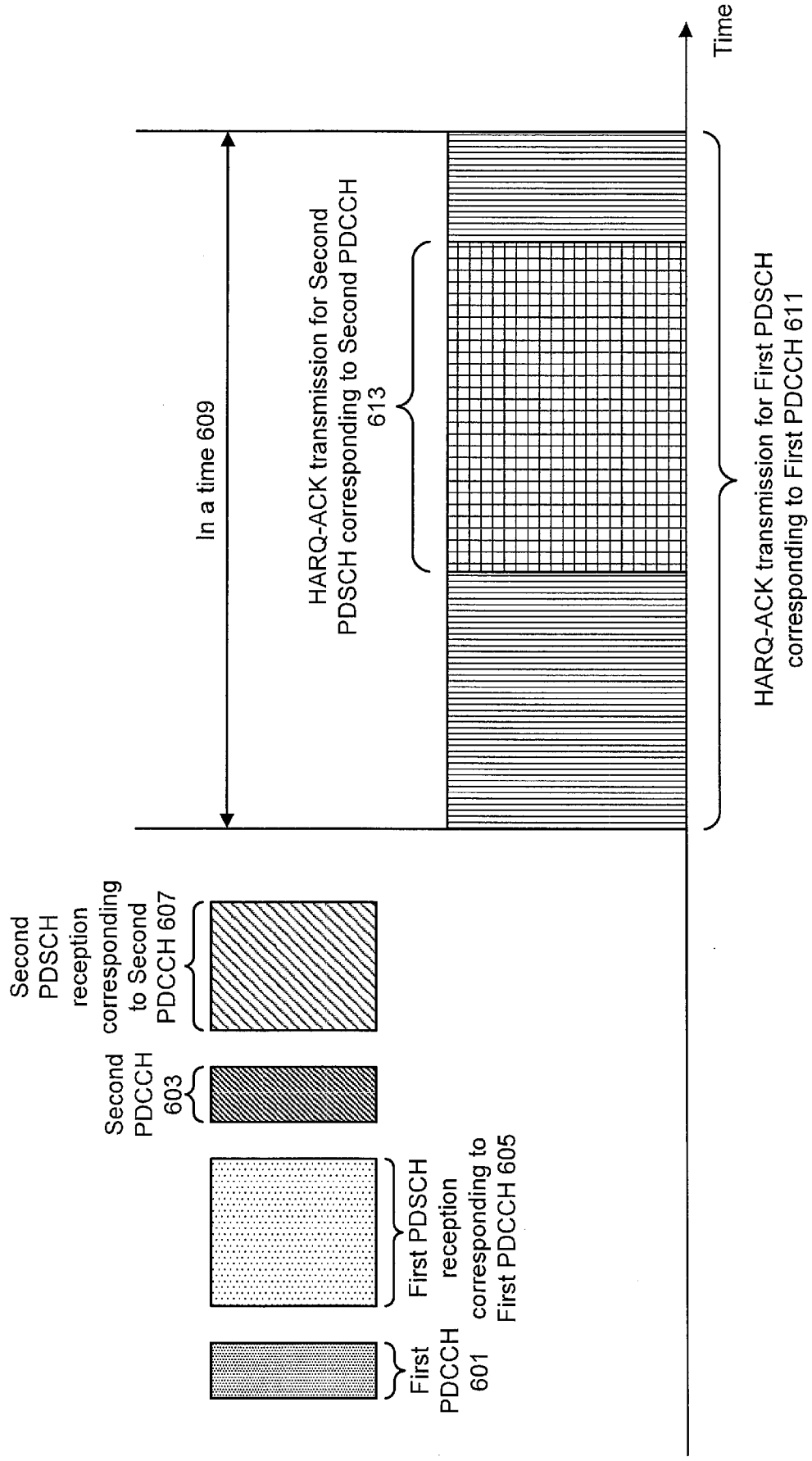
Time
In a time 609
HARQ-ACK transmission for Second PDSCH corresponding to Second PDCCH 613
HARQ-ACK transmission for First PDSCH corresponding to First PDCCH 611
Second PDSCH reception corresponding to Second PDCCH 607
Second PDCCH 603
First PDSCH reception corresponding to First PDCCH 605
First PDCCH 601

FIG. 6

[Fig. 7]

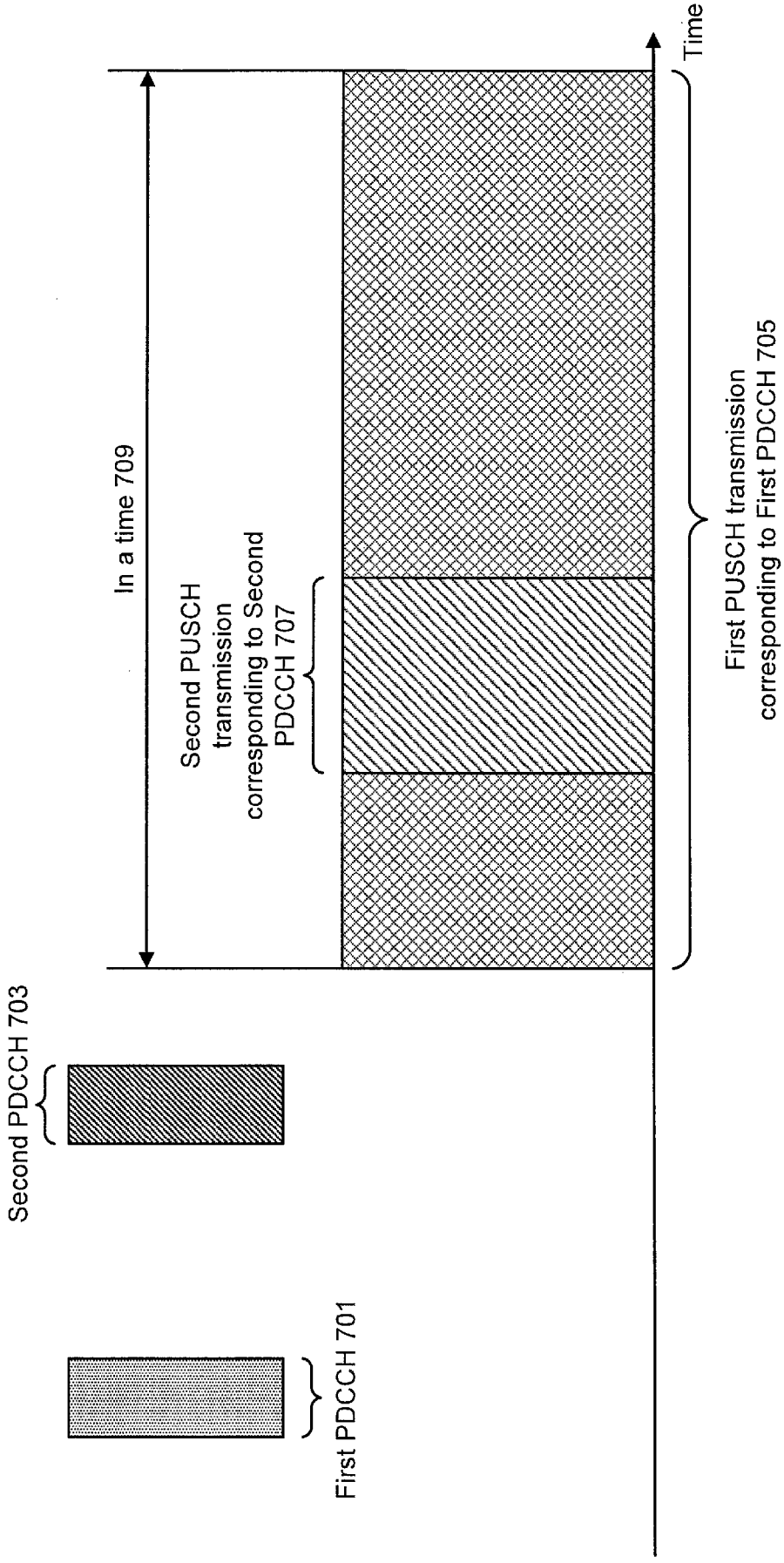
Time
In a time 709
Second PUSCH transmission corresponding to Second PDCCH 707
First PUSCH transmission corresponding to First PDCCH 705
Second PDCCH 703
First PDCCH 701

FIG. 7

[Fig. 8]

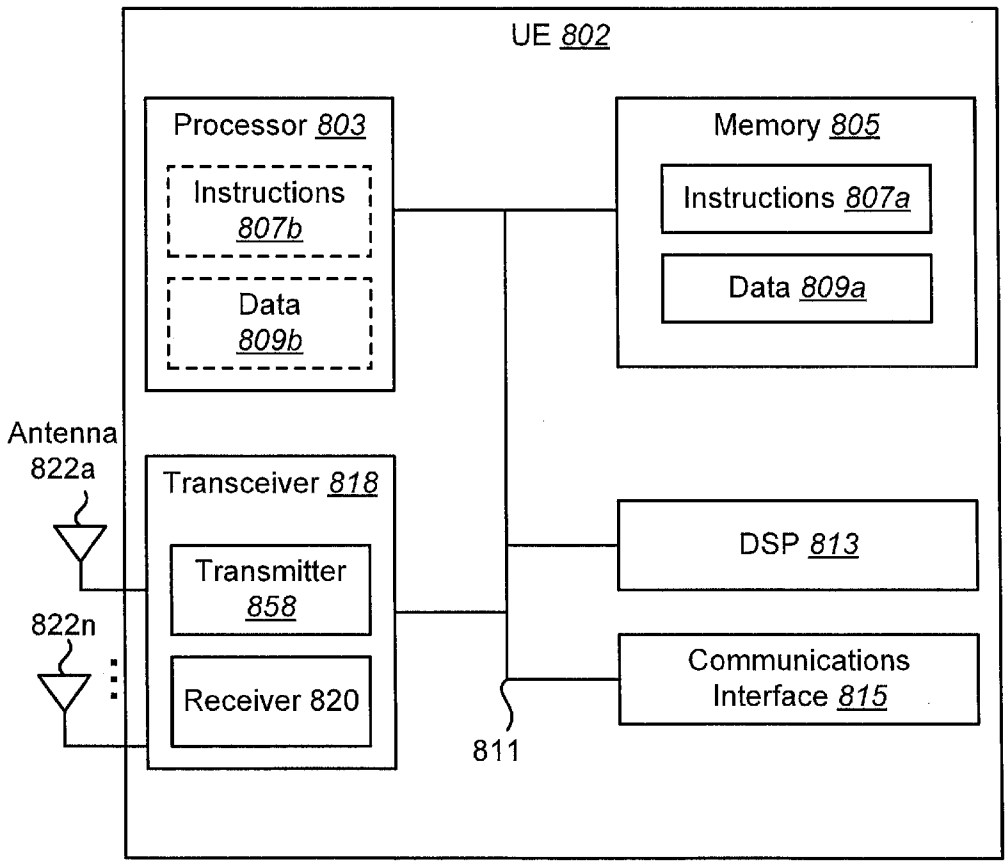
UE 802
Processor 803
Instructions 807b
Data 809b
Memory 805
Instructions 807a
Data 809a
Antenna 822a
822n
Transceiver 818
Transmitter 858
Receiver 820
DSP 813
Communications Interface 815
811

FIG. 8

[Fig. 9]

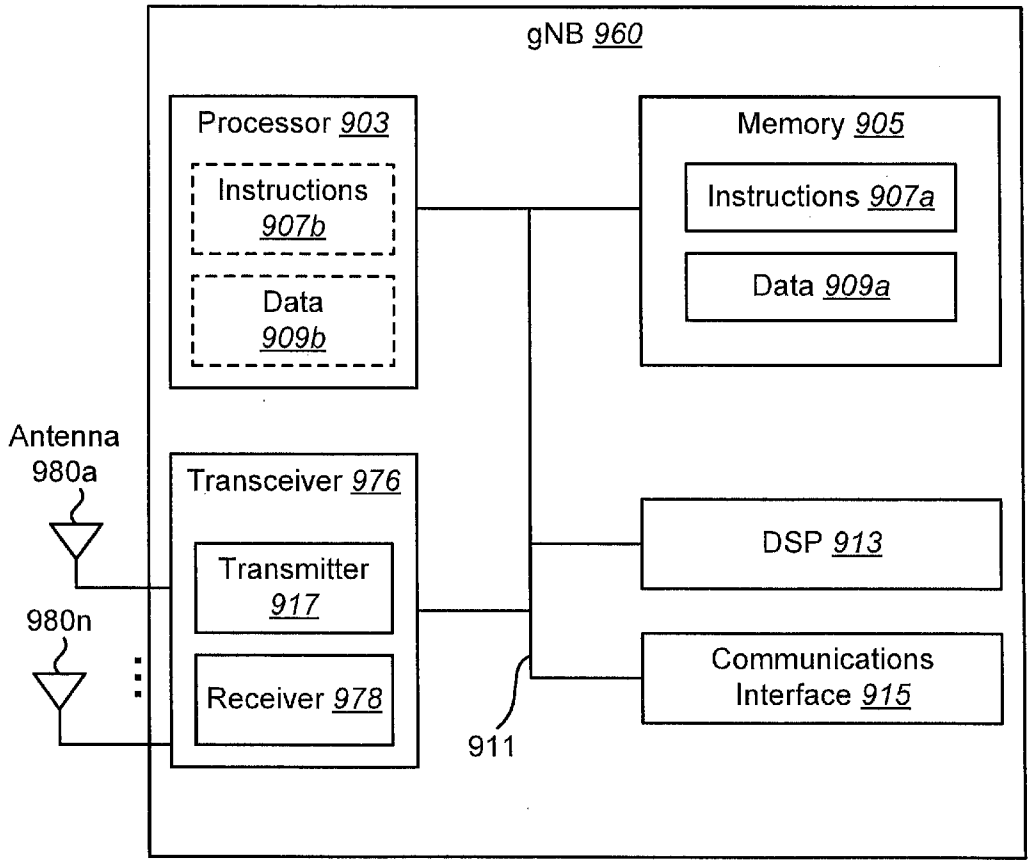

FIG. 9

[Fig. 10]

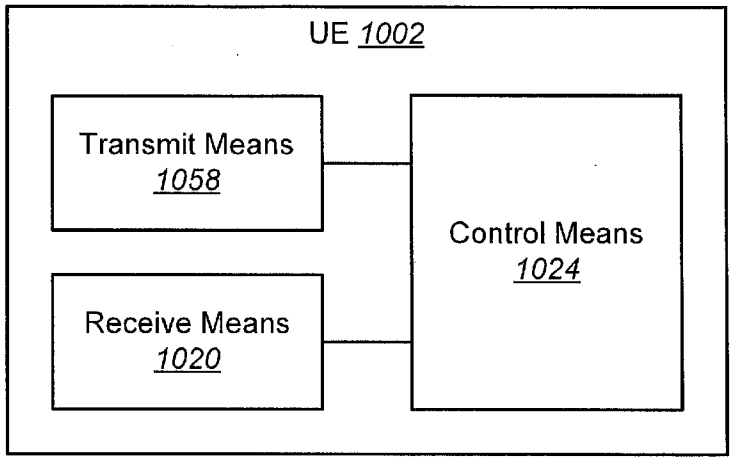

FIG. 10

[Fig. 11]

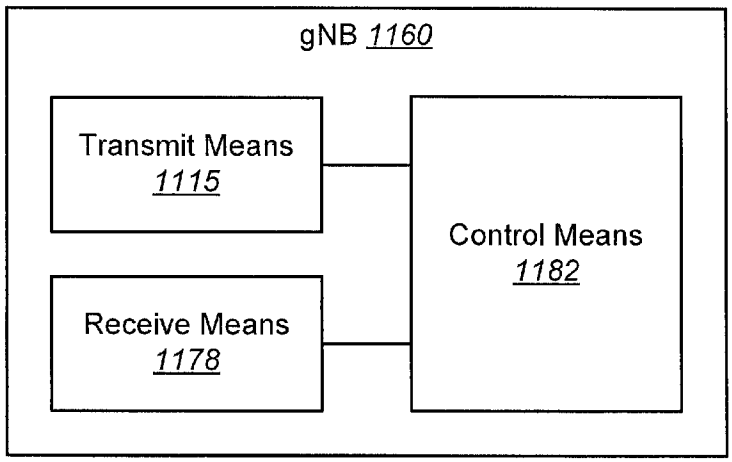
gNB 1160
Transmit Means
1115
Receive Means
1178
Control Means
1182

FIG. 11

[Fig. 12]

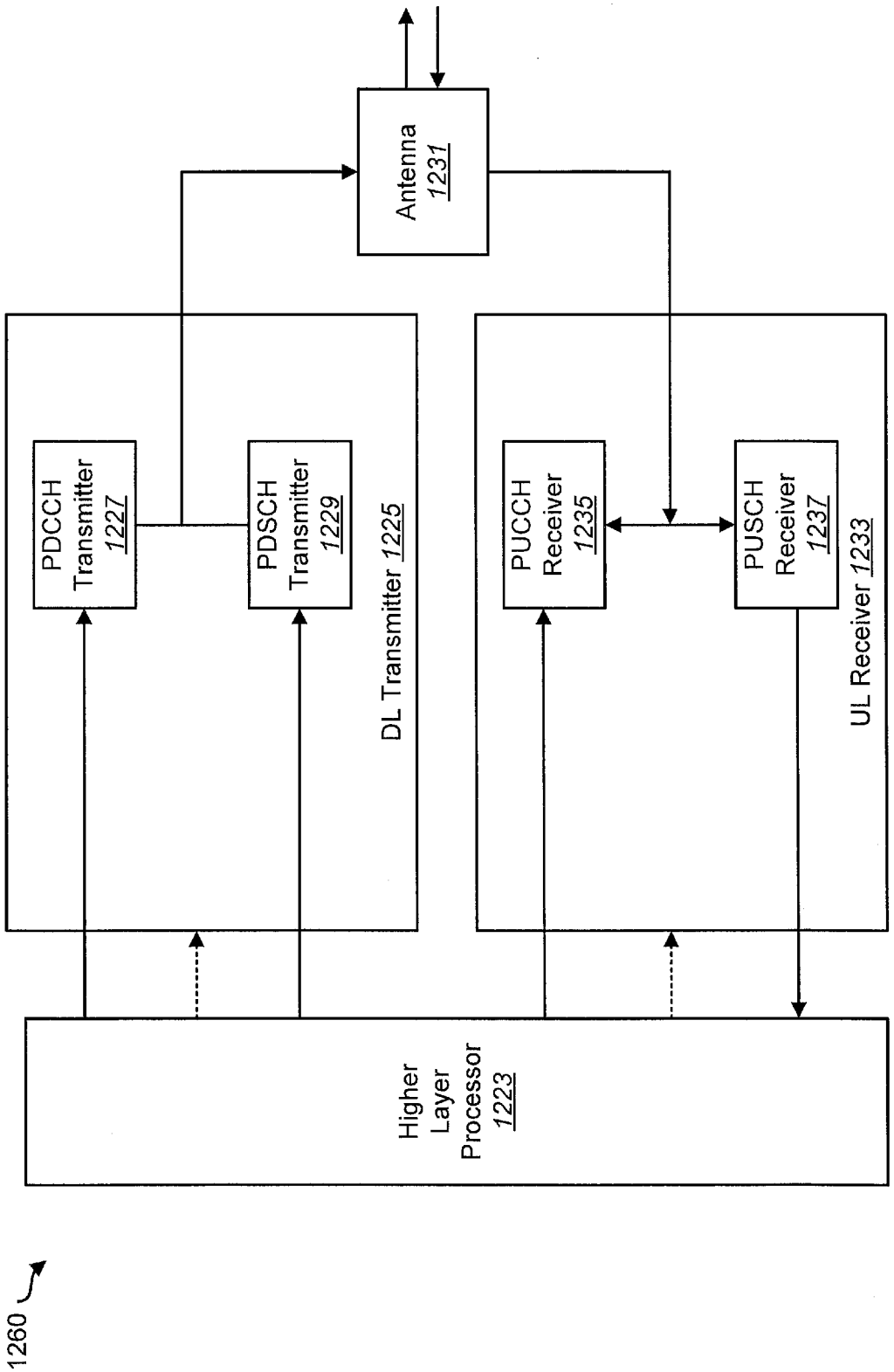
Antenna 1231
PDCCH Transmitter 1227
PDSCH Transmitter 1229
DL Transmitter 1225
PUCCH Receiver 1235
PUSCH Receiver 1237
UL Receiver 1233
Higher Layer Processor 1223
1260

FIG. 12

[Fig. 13]

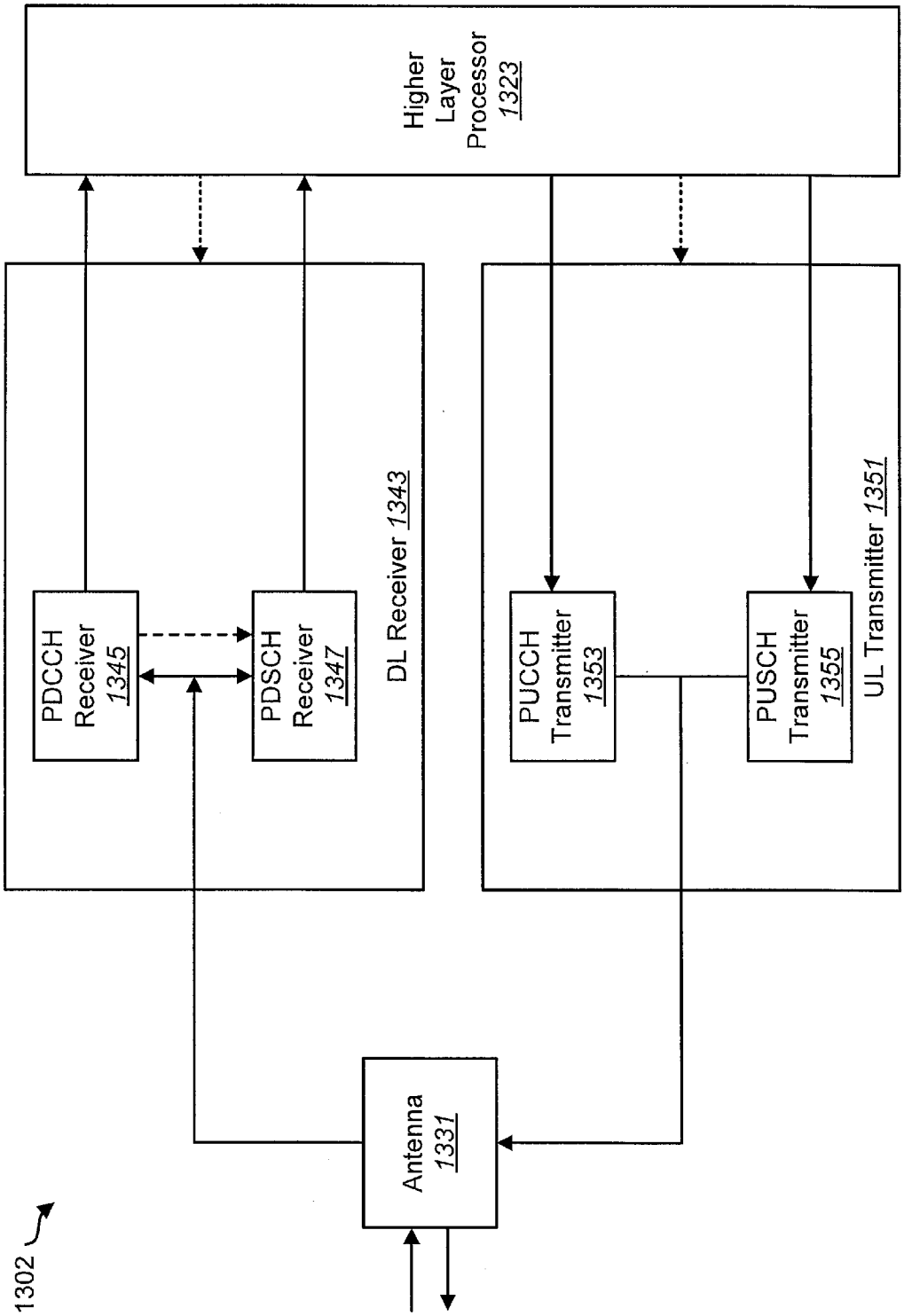
Higher Layer Processor 1323
DL Receiver 1343
PDCCH Receiver 1345
PDSCH Receiver 1347
UL Transmitter 1351
PUCCH Transmitter 1353
PUSCH Transmitter 1355
Antenna 1331
1302

FIG. 13

[Fig. 14]

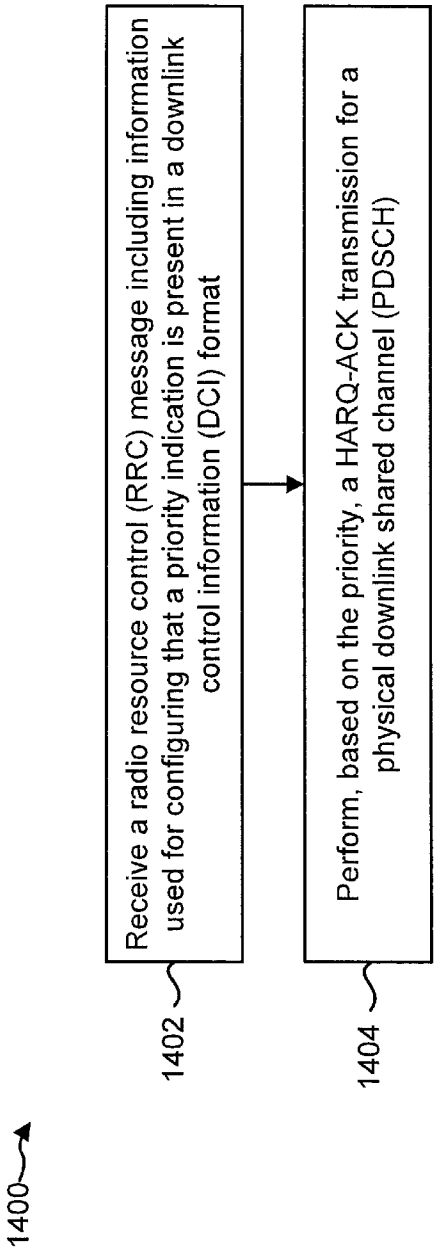
Receive a radio resource control (RRC) message including information used for configuring that a priority indication is present in a downlink control information (DCI) format
Perform, based on the priority, a HARQ-ACK transmission for a physical downlink shared channel (PDSCH)
1402
1404
1400

FIG. 14

[Fig. 15]

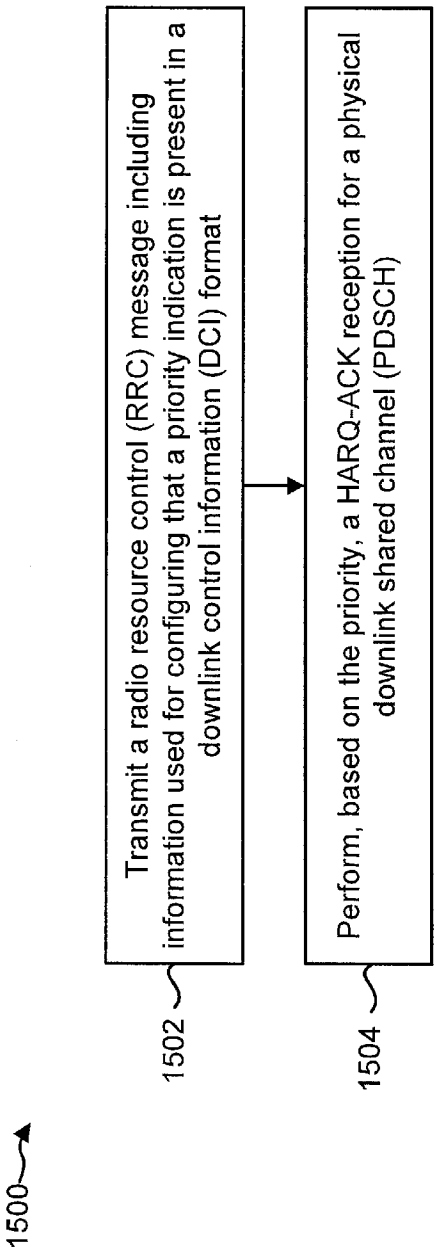
1500
1502
Transmit a radio resource control (RRC) message including information used for configuring that a priority indication is present in a downlink control information (DCI) format
1504
Perform, based on the priority, a HARQ-ACK reception for a physical downlink shared channel (PDSCH)

FIG. 15

INTERNATIONAL SEARCH REPORT

International application No.
PCT/JP2020/012243

A. CLASSIFICATION OF SUBJECT MATTER

H04W 72/04(2009.01)i; ***H04W 28/04***(2009.01)i; ***H04W 28/06***(2009.01)i
FI: H04W28/04 110; H04W28/06 110; H04W72/04 136

According to International Patent Classification (IPC) or to both national classification and IPC

B. FIELDS SEARCHED

Minimum documentation searched (classification system followed by classification symbols)

H04B7/24-7/26, H04W4/00-99/00

Documentation searched other than minimum documentation to the extent that such documents are included in the fields searched

Published examined utility model applications of Japan 1922-1996
Published unexamined utility model applications of Japan 1971-2020
Registered utility model specifications of Japan 1996-2020
Published registered utility model applications of Japan 1994-2020

Electronic data base consulted during the international search (name of data base and, where practicable, search terms used)

C. DOCUMENTS CONSIDERED TO BE RELEVANT

Category*	Citation of document, with indication, where appropriate, of the relevant passages	Relevant to claim No.
Y	Qualcomm Incorporated, PDCCH Enhancements for eURLLC, 3GPP TSG RAN WG1 #96 R1-1903004, 2019.02.16 Section 2.2	1-4
Y	Nokia, Nokia Shanghai Bell, On UCI Enhancements for URLLC, 3GPP TSG RAN WG1 adhoc_NR_AH_1901 R1-1900928, 2019.01.12 Section 2.3	1-4
Y	Sharp, Initial access signals/channels for NR-U, 3GPP TSG RAN WG1 #96 R1-1902654, 2019.02.15 Section 2.1	1-4

☐ Further documents are listed in the continuation of Box C. ☐ See patent family annex.

* Special categories of cited documents:
"A" document defining the general state of the art which is not considered to be of particular relevance
"E" earlier application or patent but published on or after the international filing date
"L" document which may throw doubts on priority claim(s) or which is cited to establish the publication date of another citation or other special reason (as specified)
"O" document referring to an oral disclosure, use, exhibition or other means
"P" document published prior to the international filing date but later than the priority date claimed
"T" later document published after the international filing date or priority date and not in conflict with the application but cited to understand the principle or theory underlying the invention
"X" document of particular relevance; the claimed invention cannot be considered novel or cannot be considered to involve an inventive step when the document is taken alone
"Y" document of particular relevance; the claimed invention cannot be considered to involve an inventive step when the document is combined with one or more other such documents, such combination being obvious to a person skilled in the art
"&" document member of the same patent family

Date of the actual completion of the international search	Date of mailing of the international search report
28 May 2020	**09 June 2020**
Name and mailing address of the ISA/JP **Japan Patent Office** **3-4-3, Kasumigaseki, Chiyoda-ku, Tokyo** **100-8915, Japan**	Authorized officer **Yoshihiro MATSUNO 5J 3571** Telephone No. **+81-3-3581-1101 Ext. 3534**