June 16, 1959 W. A. HAYSSEN 2,890,555

WRAPPING MACHINE FILM MATERIAL SUPPORTS

Filed Nov. 25, 1957 2 Sheets-Sheet 1

Fig. 1.

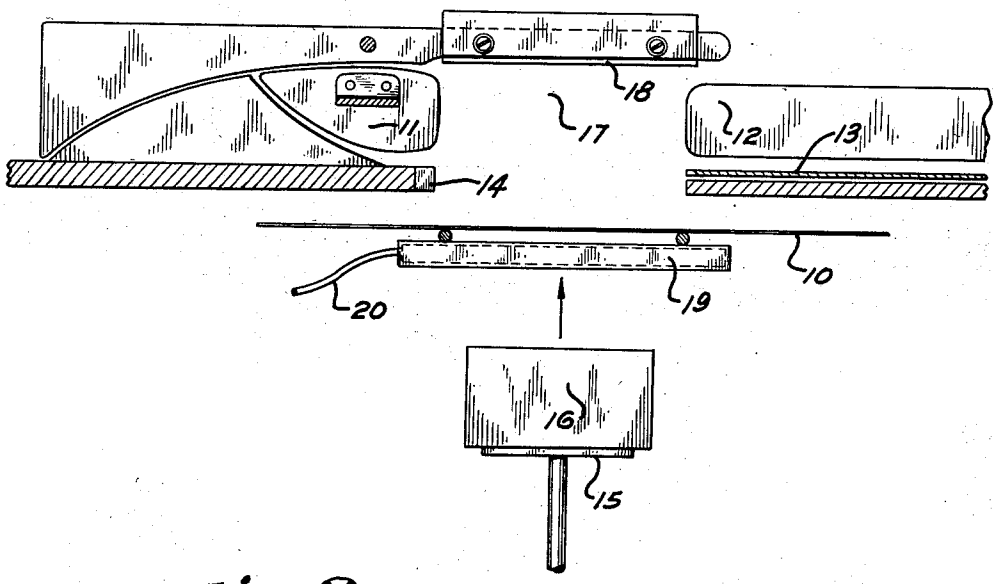

Fig. 2.

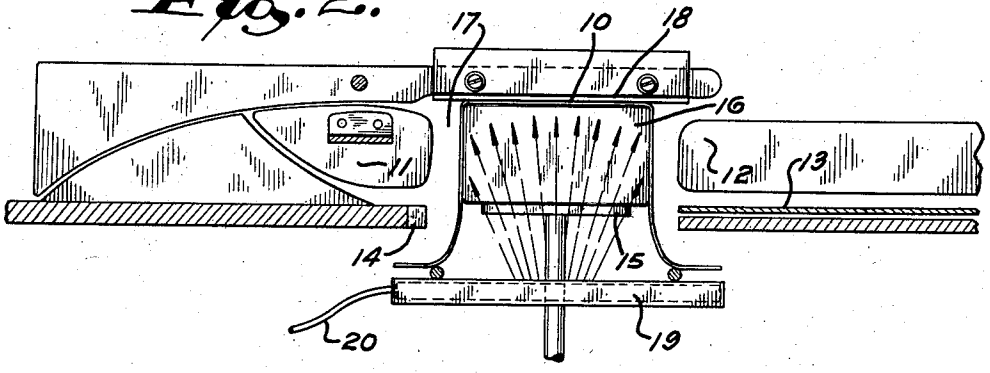

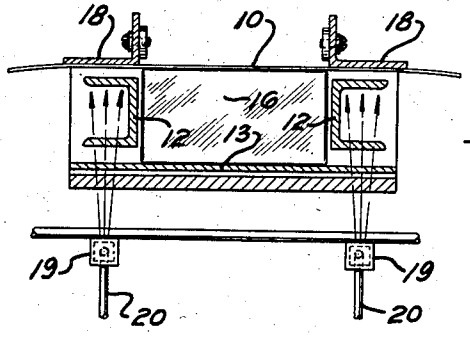

Fig. 5.

INVENTOR.
William A. Hayssen,
BY
Morsell & Morsell
ATTORNEYS

June 16, 1959 W. A. HAYSSEN 2,890,555

WRAPPING MACHINE FILM MATERIAL SUPPORTS

Filed Nov. 25, 1957

2 Sheets-Sheet 2

Fig. 4.

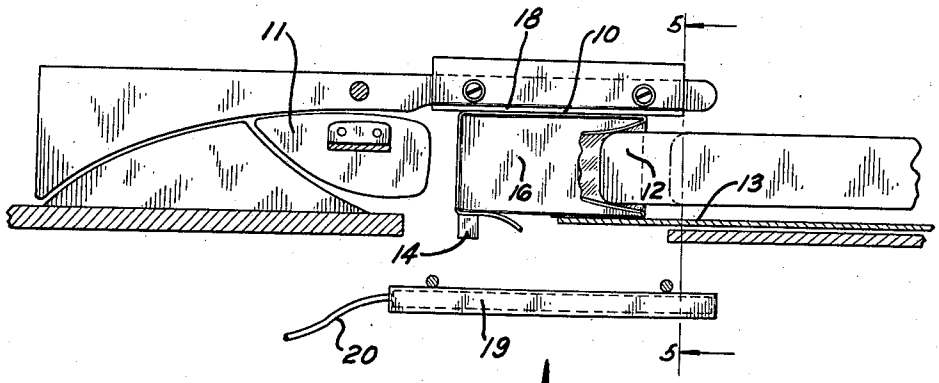

Fig. 3.

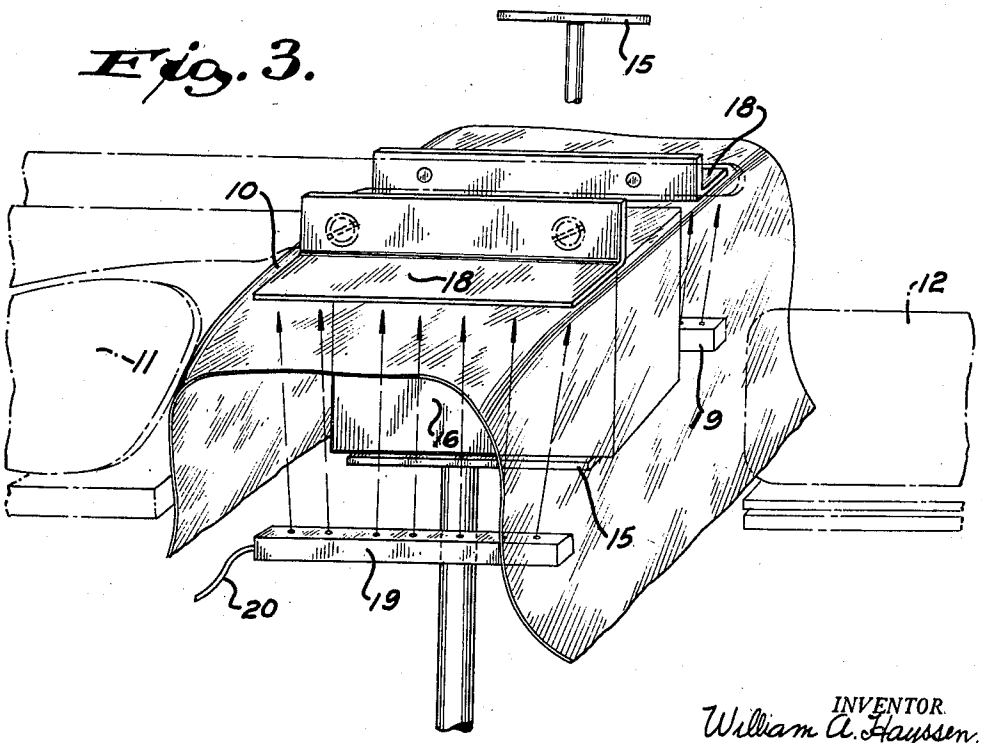

INVENTOR.
William A. Hayssen,
BY Morsell + Morsell
ATTORNEYS.

United States Patent Office 2,890,555
Patented June 16, 1959

2,890,555

WRAPPING MACHINE FILM MATERIAL SUPPORTS

William A. Hayssen, Elkhart Lake, Wis., assignor to Hayssen Manufacturing Company, Sheboygan, Wis., a corporation of Wisconsin

Application November 25, 1957, Serial No. 698,717

2 Claims. (Cl. 53—228)

This invention relates to improvements in wrapping machine film material supports, and more particularly to a support for holding outstretched certain portions of special types of limp film material during the wrapping operation.

There are in common use wrapping machines in which a sheet of the film or wrapping material is fed in an overhead position relative to the package to be wrapped so that the film or wrapping material covering the top of the package will drape down evenly over the sides of the package with extents of the film or sheet material extending outwardly from the opposite ends of the package to be ultimately tucked and folded over the ends of the package after the draped sides of the film material are folded under the package.

Most of the film or wrapping materials used in the past possessed sufficient stiffness so that when the package was pushed into contact with the undersurface of the wrapping sheet with the sides of the latter draping over the sides of the package, the end extents of the wrapping material beyond that engaging the top of the package would remain outstretched horizontally so that the tucking and folding operations could be efficiently carried out by the wrapping machine mechanism in proper sequence. However, there are now available for packaging certain desirable new film materials such as Pliofilm, polyethylene, polyvinyl chloride, saran and the like, which film materials are extremely soft and limp with the result that it has not been practical heretofore to use such special soft and limp film materials in the conventional "overwrap" machines because the portions of the film material beyond the ends of the package would initially drape down over the ends of the package, instead of remaining horizontally outstretched, and thus interfere with the proper sequence of tucking and folding operations such as is necessary to provide proper folds and tucks relative to the package being wrapped.

With the foregoing in mind it is, therefore, a primary object of the present invention to provide a simple mechanism with which standard wrapping machines may be easily equipped and which will function to hold portions of special soft and limp wrapping materials elevated and extended outright prior to the operation of the rear tuckers and bottom folders of the machine, so that said portions of the wrapping material may be tucked and folded at the proper time and not interfere with the other operations.

A further object of the invention is to provide, in a wrapping machine, mechanism which will automatically function to hold outstretched, during certain portions of the wrapping sequence, outer end extents of soft and limp special film wrapping material.

A more specific object of the invention is to provide, in a wrapping machine of the character described, mechanism for engaging portions of soft and limp wrapping material to keep it outstretched which mechanism includes static plates which will attract and engage the special film wrapping material and hold it outstretched due to the static electricity in such film material and its high co-efficient of friction surface, together with strategically located air jets which, at the proper time, will force portions of the special film material against said static plates.

A further object of the invention is to provide a special film material support with which a standard wrapping machine may be easily and inexpensively equipped and which will function automatically to permit the proper folding and tucking about a package of limp and soft special film material heretofore impossible to handle in such standard wrapping machines.

A further object of the invention is to provide a special film material supporting mechanism for wrapping machines which enhances the operation of the machine, which is efficient in operation, which is strong and durable, and which is well adapted for the purposes described.

With the above and other objects in view, the invention consists of the improved wrapping machine film material support and its parts and combinations as set forth in the claims, and all equivalents thereof.

In the accompanying drawings, in which the same reference characters indicate the same parts in all of the views:

Fig. 1 is a fragmentary schematic side view, with parts in section, of that portion of a wrapping machine with which the improved special film material support is associated, said view showing the package prior to its being elevated into contact with the mid-portion of a sheet of special film materials;

Fig. 2 is a fragmentary schematic view similar to Fig. 1, only showing the package raised by the elevator into contact with the mid-portion of the special film material which is draped down the opposite sides of the package, said view also showing the application of the air jets which hold the extended front and rear portions of the film material outstretched horizontally against the static plates;

Fig. 3 is a fragmentary front and side perspective view showing the condition illustrated in Fig. 2 with the front and rear ends of the film material blown into contact with the static plates by the air jets;

Fig. 4 is a schematic view similar to Fig. 2, only showing inward movement of the rear end tucker and the bottom folder to commence the folding of the ends of the draped portions of the film material against the bottom and ends of the package, which tucker and bottom folder then support the package and permit the package elevator to be lowered; and

Fig. 5 is a transverse sectional view taken approximately along the line 5—5 of Fig. 4.

Referring now more particularly to the drawings, it will appear that in Figs. 1 to 5 inclusive there is schematically illustrated that portion of a wrapping machine adjacent which the sheet of film or wrapping material **10** is fed in a straight line, and which portion of the machine has operatively mounted therein stationary folders **11**, end tuckers **12**, a reciprocatable bottom fold plate **13**, and a front tucker **14**.

The numeral **15** designates a reciprocatable package elevator adapted to support a package **16** to be overwrapped by the sheet of film or wrapping material **10**. The package **16**, in practice one of a succession of packages to be similarly wrapped, is advanced to the top of the plate on the package elevator **15** by means conventional in wrapping machines of the type under consideration, and simultaneously a cut sheet of the film or wrapping material **10** is positioned and supported in outstretched condition above the package **16** on the lowered elevator **15** and below the package receiving chamber **17** (see Fig. 1) in the wrapping machine. The elevator **15** then is caused to reciprocate upwardly to elevate the package **16** and

bring it into contact with the mid-portion of the sheet of wrapping material **10** and the elevator proceeds upwardly until the position of Fig. 2 is obtained wherein the package **16** is supported by the raised elevator **15** within the wrapping chamber **17** of the wrapping machine.

At this point reference should be made to the problem encountered in wrapping machines of the type under consideration when it is attempted to wrap the package **16** with a sheet of special film material which is soft and limp and which might be, for instance, of Pliofilm, polyethylene, polyvinyl chloride, saran, or the like. These particular materials which have only recently become available for wrapping purposes have many desirable qualities but are extremely soft and limp as compared with such older types of film material as cellophane, glassine paper, etc. To effect proper end folds in the packaging material after it is applied to the package, in the proper sequence, it is essential that the end portions of a sheet of wrapping material applied to the top of the package extend outwardly from the ends of the top of the package horizontally, while the sides of the wrapping material sheet drape down evenly over the sides of the package, in the manner shown in Figs. 2 and 3. Film material having some degree of stiffness and rigidity will stay in the described condition. However, special film or wrapping material such as that previously mentioned, which is soft and limp, will not, without special provision being made, remain in the outstretched condition beyond the ends of the package to which it is applied. This characteristic of the special film materials mentioned has heretofore precluded its satisfactory use in wrapping machines of the type with which the present invention is concerned.

In an effort to overcome the physical properties of such special film or wrapping material and permit its employment in a standard wrapping machine the present invention utilizes, above the wrapping chamber **17**, a pair of spaced-apart metallic static plates **18** which are mounted on suitable adjacent frame portions of the machine and which are spaced apart a distance approximating the length of the top of the package **16** and which furthermore project outwardly beyond the ends of the package. As will appear most clearly from Figs. 3 and 5, there are also suitably mounted below the package receiving chamber **17** a pair of air blower tubes or bars **19** having air jets or orifices in their top surfaces and one of which bars or tubes **19** underlies each of the overhanging portions of the spaced-apart metallic static plates **18**. The air blower tubes or bars **19** are supplied with air under pressure by conduits **20** extending to a source of supply (not shown) and the supply of air under pressure to said members **19** may be controlled by suitable valves (not shown).

When the elevator **15** raises the package **16** from the position of Fig. 1 to the position of Fig. 2, the supply of air under pressure to the air bars or tubes **19** is turned on so that forceful upward jets of air under pressure are directed against the under portions of the wrapping sheet **10** which are intended to project beyond the ends of the package at its top. Static electricity is an inherent quality of the films or wrapping materials of the special type utilized. Additionally, because of friction thereagainst while the film material is fed or advanced the same are charged with static electricity and furthermore have a high co-efficient of friction surface with the result that when the air blasts force these extended ends of the sheet material **10** into contact with the undersurface of the static plates **18**, said portions of the sheet of wrapping material will remain in engagement with the static plates even after the air jets from the members **19** are turned off and this results in the desirable condition depicted in Figs. 3 and 5.

When the condition illustrated in Figs. 2 and 3 is attained and the air jets are turned off, the wrapping machine operates to cause the tucker bar **14** to reciprocate inwardly transversely under the adjacent edge of the package **16** and at the same time the end tuckers **12** move

inwardly from the position of Fig. 2 to the full line position of Fig. 4 to form end tucks and folds in that portion of the wrapper which was originally draped over the adjacent side of the package. The bottom folder **13** is also moved inwardly from the position of Fig. 2 to the position of Fig. 4 and the inward movement of the members **13** and **14** partially under the package serves to support the package so that the package elevator **15** can be moved to its lowered inoperative position, as shown. The inward reciprocation of the members **13** and **14** also operates to fold under the package the lower extents of the portions originally draped over the sides. As there is no air issuing at this time from the air blower bars **19**, it is of no consequence that they are temporarily blocked by the inward movement of the members **13** and **14** and the end extents of the wrapper **10** are maintained outstretched against the undersurfaces of the static plates **18** by static electricity and friction.

After the retraction or lowering of the package elevator **15**, the rear tuckers **12** actually function to push the package toward the left relative to Figs. 2 and 4 and through the stationary folders **11**, following which the proper wrapping of the package is completed, including the downward folding of those portions of the wrapper which were, until the proper time, releasably held aloft and out of the way by the static plates. The same sequence of operations may be successively performed with respect to additional packages being delivered to the lowered package elevator **15**.

It is obvious that a conventional package wrapping machine may be readily equipped with the spaced-apart overhead static plates **18** and the air blower bars or tubes **19** at a minimum of expense and effort. These appurtenances will in no wise affect the normal operation or efficiency of the wrapping machine, yet they adapt a standard wrapping machine to the handling of special film or wrapping materials of a soft and limp nature, not heretofore susceptible of successful use in said wrapping machines.

The film material supporting mechanism for the wrapping machine functions automatically and will engage the desired projecting extents of wrapping material and hold it outstretched to facilitate the performance of certain of the wrapping operations whereupon the engaged extents of the wrapping material can be freed of the attraction afforded by the static plates and folded against the ends of the package.

The improved wrapping machine film material supporting mechanism is simple, effective, and well adapted for the purposes described.

What is claimed as the invention is:

1. In a package overwrapping machine having a package wrapping station with an open side adjacent which a sheet of soft and limp statically charged wrapping material is fed in outstretched condition with the sheet of wrapping material being of greater length than the package to which it is applied, said package wrapping station having folding and tucking mechanism including elements which are projectable and retractable relative to the interior of the package wrapping station to engage flaps of the wrapping material sheet which subsequently overlie wall portions of the package at right angles to the package face which engages the central portion of the sheet, means for advancing a package at right angles to the plane of the wrapping material sheet into engagement with a central portion of the latter and into the package wrapping station through the open side thereof, spaced plates mounted within said package wrapping station to overhang opposite margins of the innermost face of the advanced, sheet-engaging package, and a controlled air jet tube spacedly mounted from one surface of the wrapping material sheet to force opposite extended marginal portions of the wrapping material sheet beyond the afore-mentioned margins of the package into contact with said plates to be temporarily statically retained there-

by in outstretched condition while the tucking mechanism operates on other portions of the wrapping sheet, the static retention of said portions of the sheet by the plates continuing after the projection of said folding and tucking mechanism elements through the path of the air jets.

2. In a package overwrapping machine having a package wrapping station with an open under side adjacent which a sheet of soft and limp statically charged wrapping material is fed in outstretched condition with the sheet of wrapping material being of greater length and width than the package to which it is applied, said package wrapping station having folding and tucking mechanism including elements which are projectable and retractable relative to the interior of the package wrapping station and relative to end walls of a package in the station, means for elevating a package at right angles to the plane of the wrapping material sheet to engage the top face of the package with a central portion of the sheet and into the package wrapping station through the open side thereof, spaced plates mounted within said

package wrapping station to overhang opposite end margins of the top face of the advanced, sheet-engaging package, and a controlled air jet tube spacedly mounted below the open side of the package wrapping station to force opposite portions of the wrapping material sheet which extend beyond the front and rear margins of the top of the package into contact with said plates to be temporarily statically retained thereby in outstretched condition, the static retention of said portions of the sheet by the plates continuing after the projection of said folding and tucking mechanism elements through the path of the air jets to fold other portions of the sheet onto walls of the package.

References Cited in the file of this patent

UNITED STATES PATENTS

1,271,403	Williams	July 2, 1918
1,816,085	Langhammer	July 28, 1931
1,968,190	Clark	July 31, 1934