Oct. 9, 1956

H. S. EPSTEIN

2,766,042

FEED MECHANISM

Filed Sept. 11, 1950

3 Sheets-Sheet 1

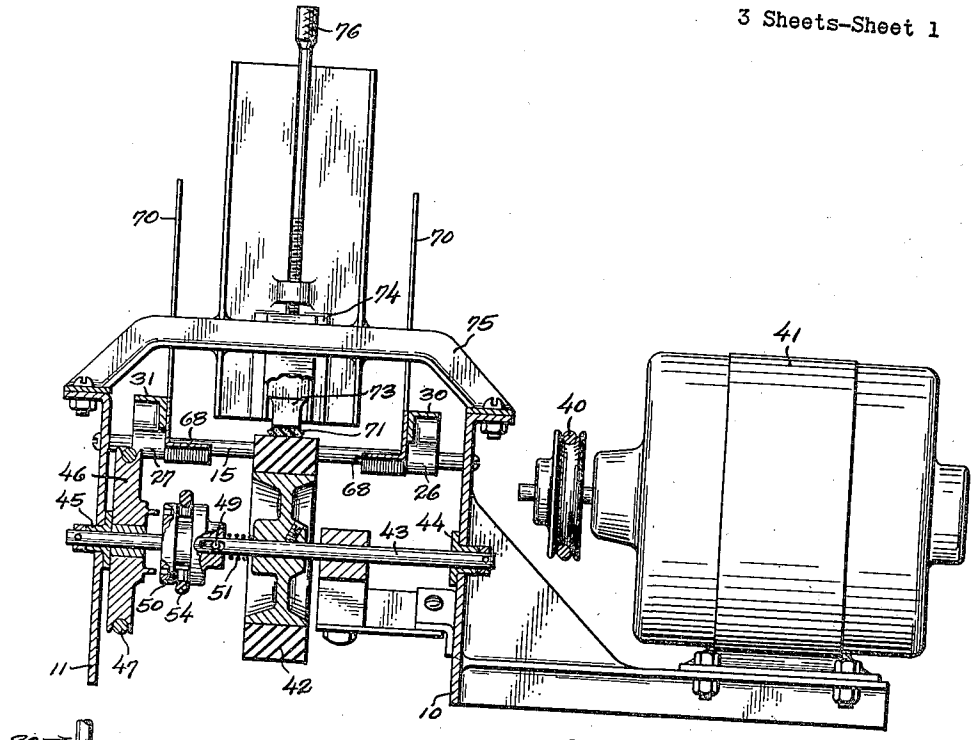

Fig. 3.

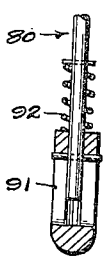

Fig. 7.

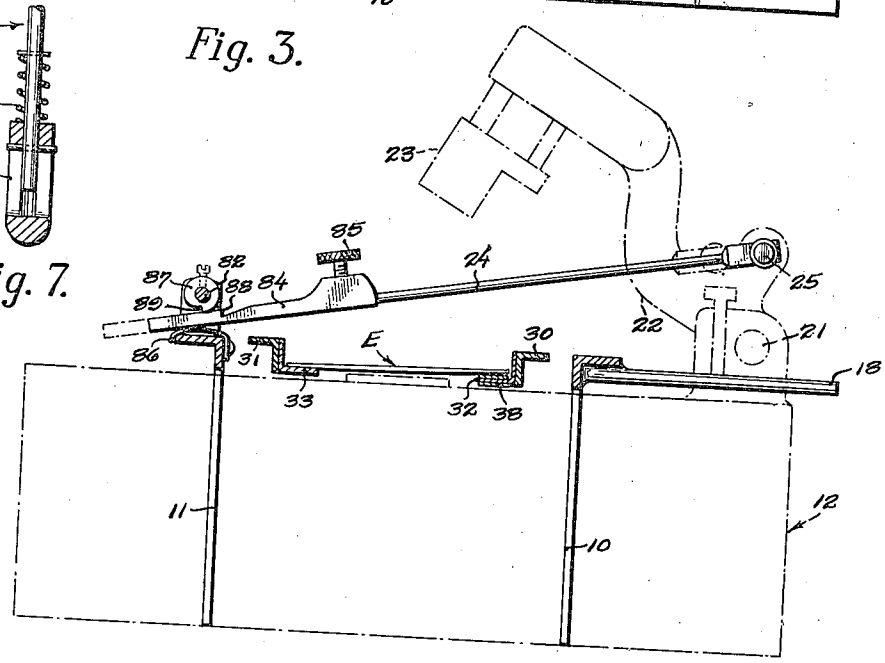

Fig. 4.

INVENTOR.
HERBERT S. EPSTEIN
BY
[signature]
atty.

Oct. 9, 1956

H. S. EPSTEIN

2,766,042

FEED MECHANISM

Filed Sept. 11, 1950

3 Sheets-Sheet 2

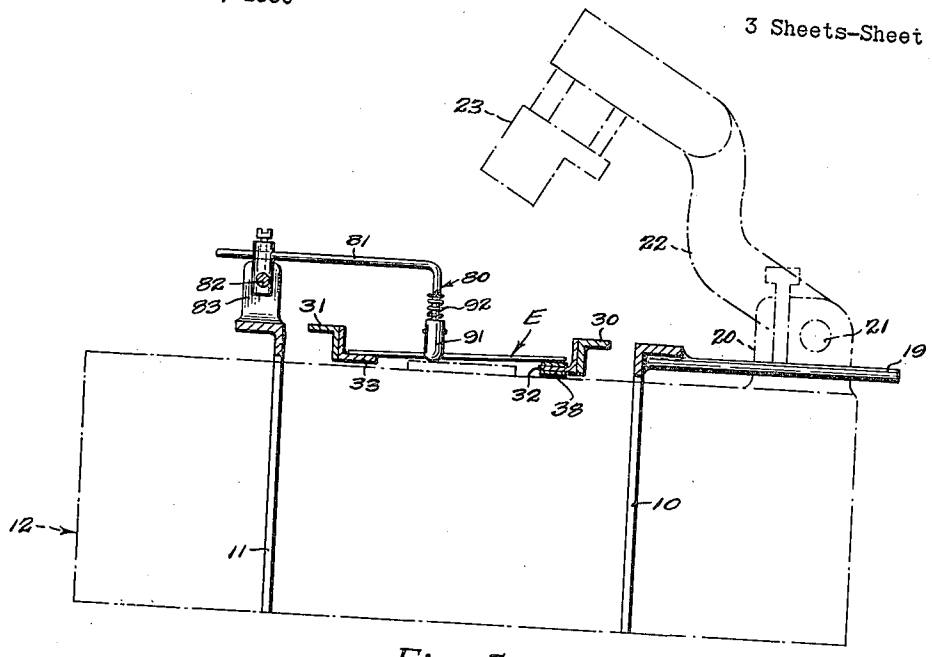

Fig. 5.

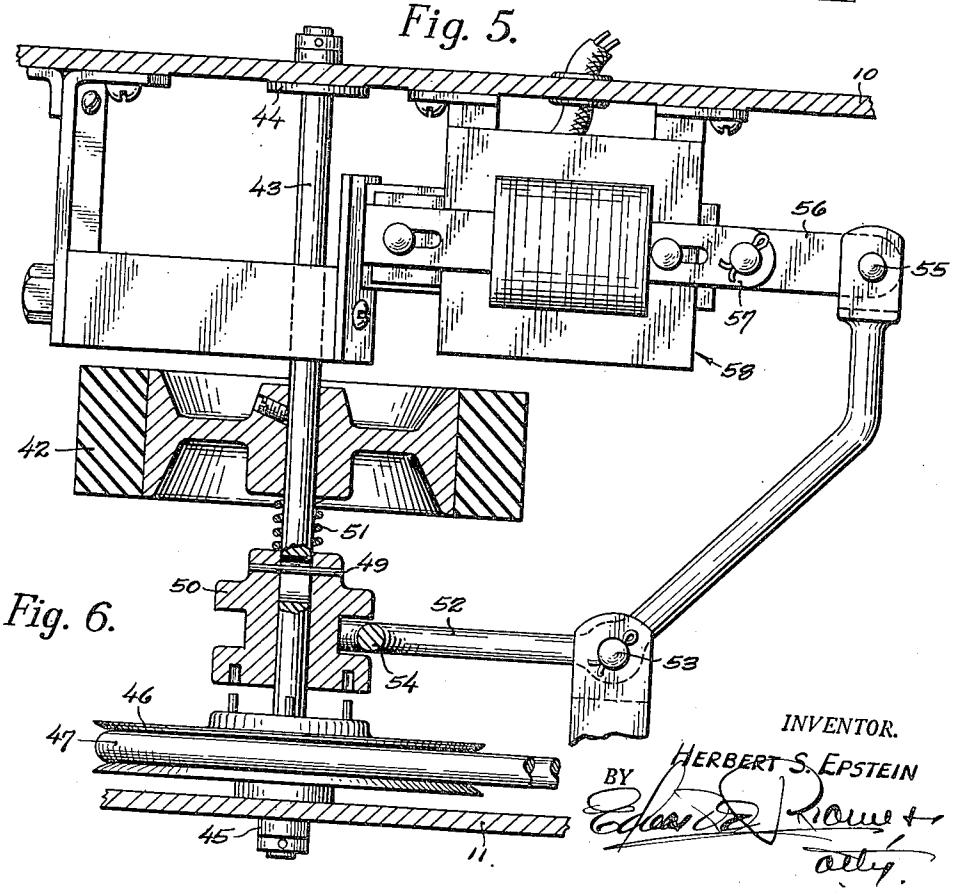

Fig. 6.

INVENTOR.
HERBERT S. EPSTEIN
BY
Edwin D. Rowe &
atty.

Oct. 9, 1956

H. S. EPSTEIN

2,766,042

FEED MECHANISM

Filed Sept. 11, 1950

3 Sheets-Sheet 3

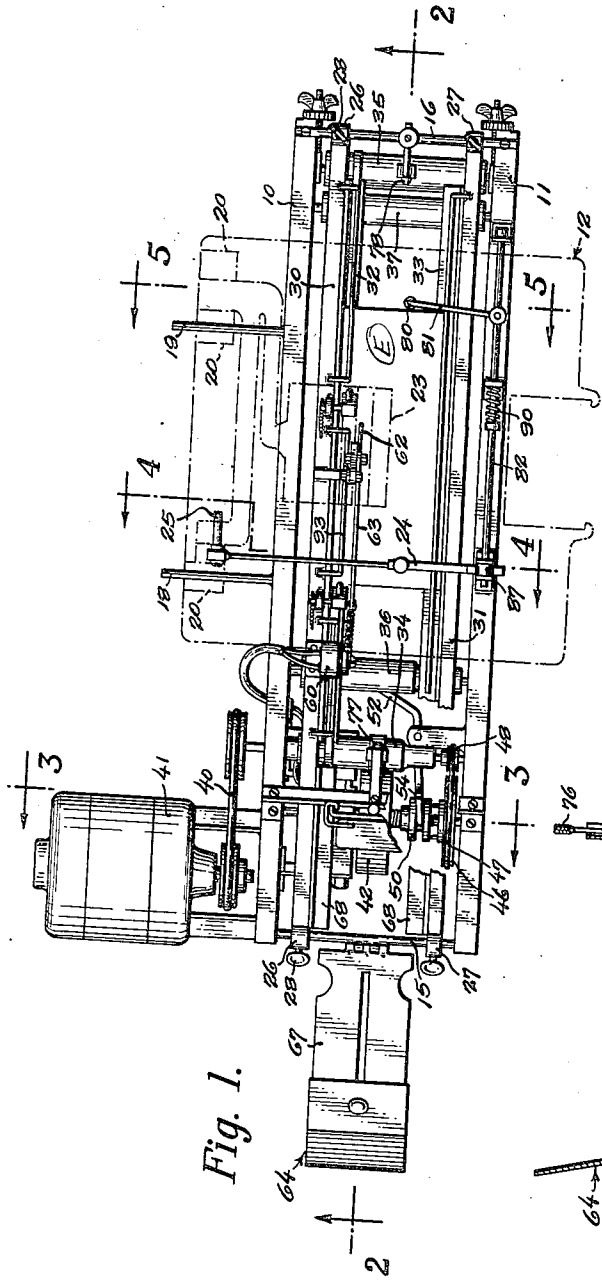

Fig. 1.

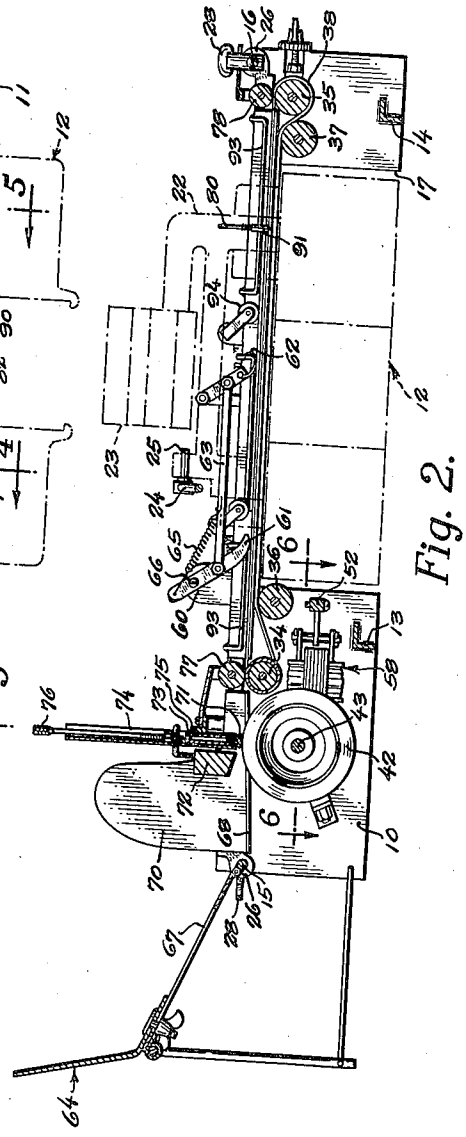

Fig. 2.

INVENTOR

HERBERT S. EPSTEIN

BY

Edward Powell

Atty.

United States Patent Office

2,766,042

Patented Oct. 9, 1956

2,766,042

FEED MECHANISM

Herbert S. Epstein, Seattle, Wash., assignor of thirty-three and one-third percent to Arthur O. Epstein and thirty-three and one-third percent to Moe Dinner, Seattle, Wash.

Application September 11, 1950, Serial No. 184,191

2 Claims. (Cl. 271—10)

This invention relates to a machine and method for feeding a succession of envelopes or other like or suitable sheet material along a travel path and, at a given point within the length of such travel, interrupting the progress of the fed body in order to localize the latter for a momentary interval. In the specific application for which it is especially engineered, the present invention is adapted to be co-ordinated with an addressing machine, and purposes by its interruption of the envelope's progress to enable the machine to impress an address upon the envelope. A feed mechanism for this same general purpose is illustrated and described in U. S. Pat. No. 2,054,844, issued Sept. 22, 1936 to S. P. Wimpee et al., this patented machine, as with the present machine, using a stacked supply of envelopes and, in successive operations, drawing the lowermost envelope from this stack, feeding the same to the addressing station and, after impressing the address thereon, ejecting the envelope. A characteristic of the Wimpee mechanism is the employment of two successively acting stop fingers arranged to interrupt the progress of the fed envelopes and so interconnected with the addressing machine as to cause the interruptive action to be timed with the movements of the machine, the first said finger blocking the fed envelope as it initially leaves the stack and there holding the same in readiness to proceed to the addressing station when a preceding envelope has cleared the latter and the second said finger blocking further progress of the envelope when the addressing station is reached. The use of the first of these two fingers becomes necessary from the fact that the envelope which is to be fed is subject to the travelling influence of an underlying constantly driven feed belt when it occupies its position at the bottom of the supply stack, and the arrangement has proven itself unsatisfactory from the fact that the envelope in the supply stack lying immediately above the lowermost envelope will on occasion edge forwardly by friction picked up from the moving lowermost envelope. Even though the rear ends of the stacked envelopes are normally elevated off the subjacent feed belt and only the tip of the lowermost envelope made subject to the latters' influence, it is found that this forward creeping of the second envelope is sufficient to in some instances drop the trailing end onto the belt with the result that the second envelope either bunches up to the rear of the preceding envelope or the two envelopes may both advance with one closely trailing the other, in either case fouling the machine.

The present invention has for its general object the provision of an improved feed which definitely precludes any but the lowermost envelope in the supply stack from being drawn out of the stack in each successive operating cycle of the machine.

Having this and other objects and advantages in view looking to the perfecting of a machine for the express purpose described, and which said objects and advantages will, with the foregoing, appear and be understood in the course of the following description and claims, the invention consists in the new method of feeding envelopes and in the novel construction, adaptation and combination of machine parts hereinafter described and claimed.

In the accompanying drawing:

Figure 1 is a top plan view of a feed mechanism embodying the teachings of the present invention, and incorporating a broken-line showing of an addressing machine with which the same is used.

Fig. 2 is a longitudinal vertical section thereof on line 2—2 of Fig. 1.

Figs. 3, 4, and 5 are transverse vertical sectional views on line 3—3, 4—4, and 5—5, respectively, of Fig. 1.

Fig. 6 is a fragmentary horizontal sectional view drawn to an enlarged scale on line 6—6 of Fig. 2; and

Fig. 7 is a fragmentary sectional view, also drawn to an enlarged scale, detailing the working end of a stop finger utilized in the present mechanism to position the fed envelopes at the addressing station.

Referring to said drawings the numerals 10 and 11 designate side plates laid on edge and extending in transversely spaced parallel relation to serve as the longitudinal principals of a suitable framework, each said plate presenting along its upper edge an out-turned flange serving as a stiffening rib. At the two ends of the framework the plates are joined across the bottom by angle-iron struts, as 13 and 14, and are joined across the top by rods, as 15 and 16, which rest upon and are secured to the flanges. As with the framework of the feed mechanism illustrated and described in the above-identified Wimpee et al. patent, my side plates are cut away, as at 17, to enable the same to fit over the base 12 of an addressing machine to which the feed mechanism is applied and I simply employ laterally projecting parallel rods 18 and 19 as a means of detachably securing the framework in laterally adjusted relation to said base. The rods are slidably received in holes drilled transversely through upstanding ears 20 which are arranged in paired sets and serve as pillow bearings for pins 21, these pins giving pivotal support to the arms 22 of a yoke swingably supporting a beam 23 for vertical reciprocatory movement toward and from an opening provided in the top wall of the machine base 12. The conventional addressing machine employs a multiplicity of embossed plates, and incorporates a carriage acting from below to move these plates successively into and from a position registering with the opening. An ink-impregnated ribbon traverses the opening in overlying relation to the registered plates, and the operation of addressing envelopes is one of pressing the latter downwardly by means of a beam-carried platen to pick up an ink impression of the embossing. It is unimportant to a clear understanding of the present invention to describe the addressing machine in any further detail and suffice it to here say that while I show rods 18 as a means of adjustably anchoring the framework of my feed mechanism, and also have recourse to a pitman arm 24, taking its drive from a crank pin 25 movable reciprocally with the beam-carrying yoke, as a control for locating the fed envelopes in proper position to be addressed, other means could as well be employed and quite feasibly might be necessary where the addressing machine to which the feed mechanism is applied embodies any radical departure from the machine which I have here elected to show.

Reverting to the present mechanism, there is slidably mounted upon each of the two cross-rods 15 and 16 a pair of collars, as 26 and 27, each provided with a thumb screw 28 to enable the same to be fixed in transversely adjusted positions upon the rods, and made rigid with and extending longitudinally from each of the two collars of one of said pairs to a related collar of the

other pair are respective angle-iron stringers designated by 30 and 31. Complementing angle-iron members are welded or otherwise fixed in back-to-back relation along the inner sides of these stringers to produce that which in effect is a double-L iron, and the inturned horizontal web-sections 32 and 33 of these double-L stringers operate as substantial tracks sustaining the side edges of the envelopes as the latter are fed into printing positions below the platen. As will be seen from an inspection of Figs. 1 and 2, the tracks do not extend the full length of the framework, having an overall span only slightly longer than the cut-away 17 which accommodates the addressing machine, and at each end of the tracks there is provided a respective primary roller, as 34 and 35, journaled from the frame to rotate about a transverse horizontal axis and each located to have a tangent of its upper surface approximately coincide with the upper level of the track. Complementary to each of the primary rollers and located inwardly thereof but spaced below the tracks is a respective secondary roller, as 36 and 37, and this set of four rollers serves to carry an endless feed belt 38 composed by preference of thin fabric tape. There is a single such belt and the upper run thereof bears upon the track 32 with its two ends passing first about the primary rollers and thence up and over the secondary rollers to establish tensioning bends along the length of the lower run. Such belt takes a frictional purchase from the rollers but may be shifted endwise thereto in compensation of lateral adjustments given to the track 32. The roller 34 is a live roller driven by a belt 40 from an electric motor 41, the other rollers being in each instance free-running rollers driven only from the friction of the belt.

Removed beyond the live roller 34 toward the head end of the framework and placed central to the width thereof with its upper level flush or approximately flush with the upper level of the live roller, there is provided a rubber-surfaced drive wheel 42 fixedly mounted upon a cross-shaft 43 journaled for normal free rotation in bearing cups 44 and 45 carried by the framing plates 10 and 11. The shaft is held against endwise movement and upon an end portion thereof there is freely journaled a pulley wheel 46 constantly driven by a belt 47 off a pulley 48 fixed to the shaft which carries the live feed roller 34. Designated by 50 is a shipping spool serving with the pulley wheel as the functioning complements of a jaw-clutch, and this spool is connected for unitary rotary movement with the cross-shaft 43 by a pin 49 working in a slot of the shaft. A compression spring 51 acts to yieldingly influence this spool into clutching engagement with the pulley wheel. 52 denotes a declutching lever fulcrumed to the frame at 53 and presenting upon one end thereof a shipping fork 54 for the spool with the other end being pivotally attached, as at 55, to a link 56 which connects in turn with the core 57 of a solenoid unit 58, this solenoid being contained in an electric circuit which includes a circuit-closing switch (not shown) housed in a switch box 60. For operating this switch there are provided two lever-shoes 61 and 62 joined for parallel motion by a bar 63 and so mounted as to have the free ends occupy positions in the path travelled by the envelopes E as they are successively fed from a magazine 64 into printing position upon the addressing machine, the advancing envelope working counter to the force of a spring 65 to lift the lever-shoes and by such lifting acting to turn the fulcrum pin 66 and responsively close the housed switch, whereupon the solenoid is energized to disengage the clutch. The switch which I employ is desirably a mercury switch.

The said magazine occupies a position at the extreme head end of the feed mechanism and presents a sloping floor 67 upon which the rear-end portion of a stack of envelopes is sustained. The front side edges of this

sustained stack rests upon inturned bottom flanges 68 of cheek guides 70 lying at each side of the drive wheel and positions the stack such that the lowermost envelope in the stack protrudes its leading edge between the rubber surface of said wheel and a closely overlying body 71 of sponge rubber or the like. A freely hung weight 72 presenting a bevelled underside acts to place the envelopes in the suggestion of an echelon arrangement causing the envelopes to nose into the interstice between the drive wheel and the sponge body as they successively occupy a lowermost position in the stack. Said sponge body is carried by a clip 73 mounted for vertical slide movement in a channeled guide 74 taking its support from a kicked-up bridging piece 75, and is adjusted for desired clearance by a knurled screw 76. Also supported by this bridging piece in a manner causing the same to yieldingly bear upon the live feed roller 34 is a freely journaled pressure disc 77. A counterpart of this pressure disc, and which I designate by 78, is provided at the tail end of the machine in overlying relation to the idler roller 35.

From the foregoing it will be seen that deenergizing of the solenoid permits the spring 51 to exert its restrained load and couple the pulley wheel to the drive wheel 42, and that the drive wheel then projects the lowermost envelope in the stack forwardly between the live feed roller and its overlying pressure disc. It is a characteristic of the machine that the feed roller 34 has a surface travel considerably faster than that of the drive wheel, which serves to snake the lowermost envelope quite rapidly off the bottom of the stack and preclude any possibility of the envelope bending as its leading end reaches the feed roller. Progressing beyond the feed roller the leading end of the advancing envelope engages and lifts the lever-shoe 61 which closes the solenoid circuit and responsively uncouples the shipping spool from the driven pulley wheel 46, thus inactivating the drive wheel momentarily in advance of the point at which the trailing end of the advancing envelope clears said wheel. The feed roller and the tape belt are, however, constantly driven and the envelope continues to advance.

For the purpose of momentarily interrupting the advancing envelope to localize the same for printing, I provide a stop finger 80 and co-ordinate the same with the movements of the addressing machine such that said finger, normally occupying an interruptive position in the travel path of the envelope, moves out of and again into said position as the platen-carrying beam 23 rises after each addressing operation. To this end the finger is supported from a transverse arm 81 carried for both rotary and endwise adjustment upon a rocker shaft 82 journaled in frame-carried bearings 83. Adjacent the front end of said rocker shaft two of said bearings are placed in closely spaced relation and serve as keepers guidably supporting a notched bar 84 which is secured by a set-screw 85 in longitudinally adjusted position upon the free end of the beam-activated pitman arm 24. Serving a tripping function, said bar rides upon a leaf spring 86 and is yieldingly pressed by the latter against the underside of a shoulder cam 87 fixedly carried upon the rocker shaft, the notch 88 of the bar and the shoulder 89 of the cam working in complement as a ratchet-and-pawl connection for intermittently giving such a partial turn to the rocker shaft as will elevate the stop finger 80 out of an interruptive position in the travel path of the envelopes. This finger-elevating movement is yieldingly opposed by a torsion spring 90 and is of momentary duration in that the notch clears the shoulder and allows the spring 90 to assert itself upon the rocker shaft before the pitman arm completes its retractive stroke. As the finger rises out of its envelope-interrupting position, the continuously moving tape-belt again takes a frictional purchase upon the envelope and advances the same beyond the finger whereat the envelope becomes positively gripped

between the roller 35 and its pressure disc 78, by which it is projected from the tail end of the machine. The stop-finger has upon its lower end a round-headed foot-piece 91 yieldable upwardly against the pressure of a light spring 92 (Fig. 7), and the purpose thereof is to allow the stop finger to ride with almost negligible pressure along the upper surface of the moving envelope as the stop-finger drops upon the envelope following its momentary rise. As the envelope moves beyond its printing position, the trailing end clears the second of the two lever-shoes, and namely the shoe 62, whereupon the two shoes are urged downwardly by force of the spring 65 to open the switch and break the circuit to the solenoid, whereupon the spring 51 is allowed to exert its force upon the shipping spool and establish a driving couple through the clutch to the drive wheel. The described operation is then repeated for the then lowermost envelope in the stack.

Along the length of the tape-belt's travel between the head and tail rollers 34 and 35, there are provided hold-down bars 93 and spring-influenced idler wheels 94 pressing the advancing envelope downwardly against the tape.

While I have illustrated and described herein the embodiment which I now consider to best exemplify the teachings of the present invention, it is self-evident that minor changes in the details of construction may be resorted to without departing from the spirit of the invention and it is accordingly my intention that the hereto annexed claims be given a scope fully commensurate with the broadest interpretation to which the employed language fairly admits.

What I claim, is:

1. In mechanism for feeding sheet stock, a magazine for holding a stacked supply of the sheets, a continuously driven endless conveyor belt trained about head and tail rollers with the head end of the belt removed to the front of the magazine a distance less than the length of the sheets, pressure rolls overlying said head and tail rollers, a continuously-driven drive wheel and a normal free-running and friction-surfaced feed wheel each supported for rotation about a coinciding transverse axis located between the head roller and the magazine, a normally engaged clutch between said feed and drive wheels, means acting to guidably introduce the front edge of the lowermost sheet in the stack onto the friction surface of the feed wheel to cause said sheet, when the feed wheel is coupled by the clutch to the drive wheel, to be drawn by the feed wheel from the stack and progressively advanced to a point whereat the leading edge is frictionally caught between the head roller and its overlying pressure roll and fed onto said belt, normally depressed shoe means arranged to be raised by the sheet before the sheet has cleared the feed wheel and retained in an elevated condition by tracking upon the sheet as the latter traverses the shoe while advancing with the belt, clutch-operating means controlled by said shoe means for disengaging said clutch when the shoe means is elevated by the advancing sheet and for engaging said clutch when said shoe means is depressed, a stop finger normally occupying a position interrupting the travel of the sheet with the belt before the sheet has cleared said shoe means for moving said stop finger out of and into said sheet-interrupting position intermittently.

2. In mechanism for feeding sheet stock, a conveyor, means for feeding successive sheets to said conveyor, a finger movable out of and into a normal depressed position interrupting the progress of the sheet on said conveyor, a spring yieldingly urging said finger into its normal depressed position, and means working counter to the spring to elevate the finger out of its said sheet-interrupting position for such momentary interval as will clear the sheet and allow the front edge of the latter to progress with the conveyor beyond the finger, the finger tracking upon the facing surface of the conveyed sheet when the asserted power of the spring acts upon the finger after the latter is freed of the momentary lift action of the elevating means, the finger having a foot-piece yieldable upwardly under moderate pressure for reducing friction as the finger rides upon the advancing sheet.

References Cited in the file of this patent

UNITED STATES PATENTS

1,478,464	Waters	Dec. 25, 1923
1,555,378	Labombarde	Sept. 29, 1925
1,594,883	Holmberg	Aug. 3, 1926
1,816,319	Eksergian	July 28, 1931
1,919,238	McCarthy	July 25, 1933
1,950,642	Van Buren	Mar. 13, 1934
2,054,844	Wimpee	Sept. 22, 1936
2,082,766	Knudsen	June 1, 1937
2,265,007	Ryan	Dec. 2, 1941
2,302,060	Ryan	Nov. 17, 1942
2,343,479	Ryan et al.	Mar. 7, 1944
2,344,345	Elliott	Mar. 14, 1944
2,385,047	Adrian	Sept. 18, 1945
2,493,552	Sacchini	Jan. 3, 1950
2,554,312	Price	May 22, 1951
2,566,822	Cahill	Sept. 4, 1951